Signal transmitters M8 – without logics

COLLECTION AND TRANSMISSION OF SENSOR SIGNALS

Product notes

> Transmits up to twelve sensor signals to the robot controller
> Suitable for PNP/NPN sensors or 2-pole actuators
> LED switching status display
> Signals can be coupled via the external robot controller
> Common output:
- 20.540: 8-pole M12 plug, 1.9 m, open end, wire color to DIN 47100/11.79
- 20.541 and 20.542: 15-pole D-sub-plug, cable length 2 m, open end, wire color to DIN 47100/11.79

Technical data

Item no.	Number of slots M8	Power supply [V]	Weight [g]
20.540	5	24	65

Pin assignment: M8 jack according to IEC 947-5-2

> Slot 0-7, or 0-11:
Signal line: socket 4
DC 24 V: socket 1
0 V: socket 3

Dimensions

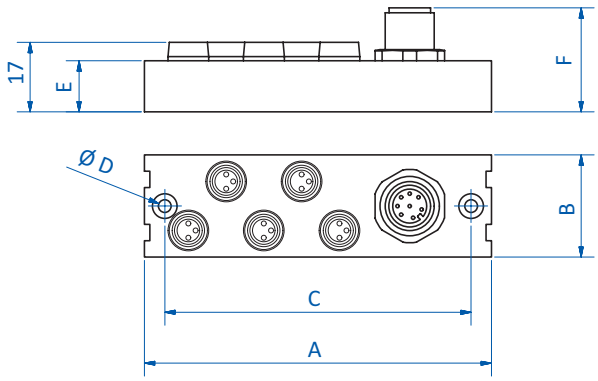

20.540

Item no.	A [mm]	B [mm]	C [mm]	Ø D [mm]	E [mm]	F [mm]
20.540	85	25	75	3.1	12.5	25.45