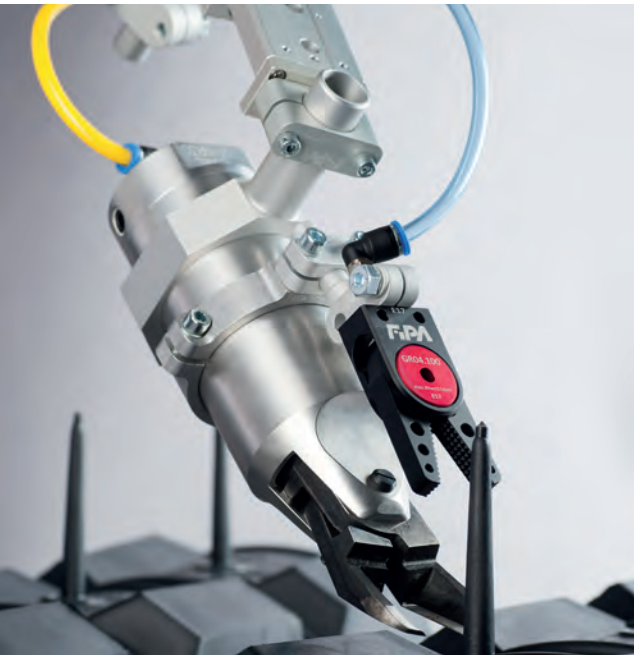

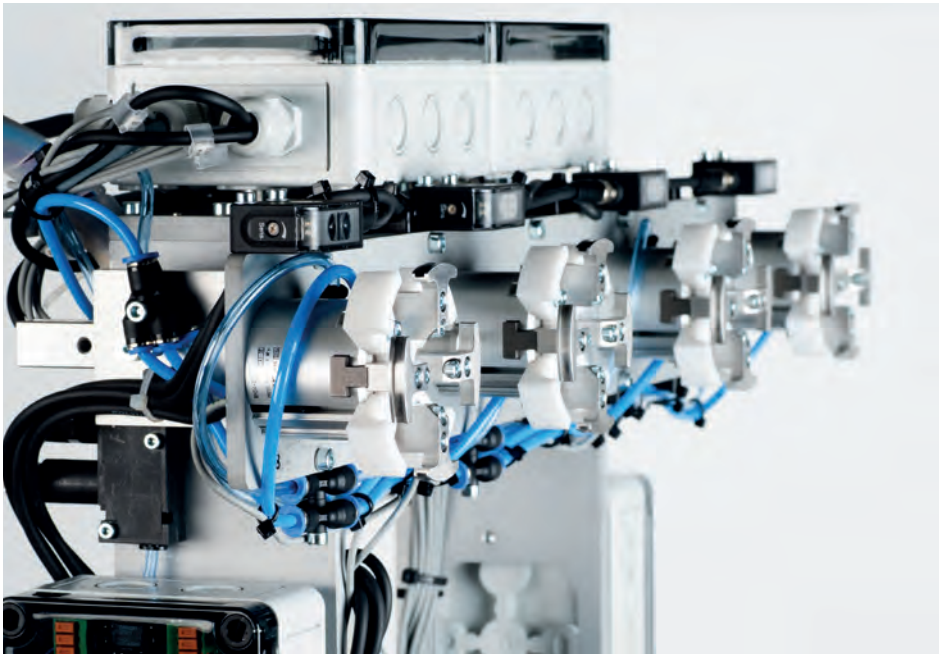

END-OF-ARM-TOOLING

2018.2019 GR08 | English

FIPA

challenge accepted

info@hidrafluid.es
976 24 32 10

Editorial

"Only those who think ahead stay ahead."

Competence in End-of-Arm-Tooling

FIPA specializes in developing and selling high-quality products, innovative material-flow and "pick & place" system solutions.

At FIPA, quality means – above all – developing products and solutions that are precisely adapted to the customer's requirements.
That is why we apply not only standard components but also highly customized individual solutions.
FIPA experts are ready to serve you with advanced application know-how, professional project management, and innovative approaches.
FIPA accepts the challenge of finding solutions where others have already given up.

This customer-oriented approach to quality also means that you can choose from modular products to put together the exact solution for which you are looking.
It should come as no surprise that FIPA also provides its customers with equally effective customer service.

FIPA has long been an internationally oriented company with more than just a first-class line of products. Thanks to a large sales network, FIPA can be where its customers are. FIPA will provide you with the service and technical support that you expect from a long-term partnership.

In this catalog you will find a wide selection of End-of-Arm-Tooling (EOAT) components for handling any type of workpiece, even those with complex shapes.

We invite you to look through this catalog and get to know FIPA's EOAT products. You will find what you are looking for. We promise. Because even if "your" product is not in the catalog, all you need to do is call us. And FIPA will develop it for you.

Best regards, Rainer Mehrer,
President of FIPA

info@hidrafluid.es
976 24 32 10

Content

About FIPA | Gripper assembly		2
Quick-change systems		11
Extrusion systems	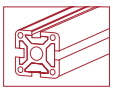	49
Gripper arms		103
Vacuum cups	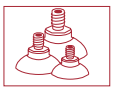	121
Grippers	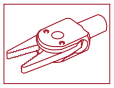	161
Nipper technology		279
Linear technology	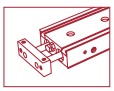	329
Control technology and system monitoring		357
Vacuum generation		385
Electronics and sensors		401
Tubing technology	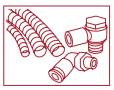	425
General technical information		458
Questionnaires		462
Item numbers index		471

info@hidrafluid.es
976 24 32 10

Quick-change systems at a glance 12

S Series 13

SR Series 20

R Series 39

ASR Series 42

info@hidrafluid.es
976 24 32 10

FIPA Quick-change systems

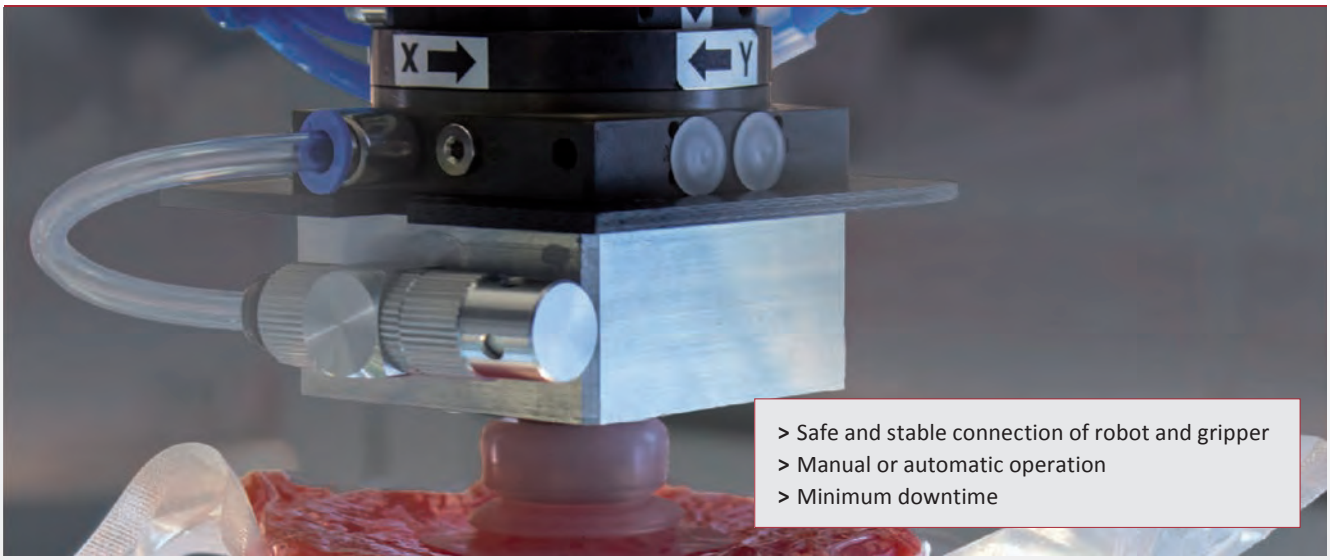

> Safe and stable connection of robot and gripper
> Manual or automatic operation
> Minimum downtime

S Series – manual quick-change system

> Four sizes with load capacity from 5 to 40 kg
> Easy change-over of base plates and pneumatic couplings
> Spring loaded base plates for compensating ejector stroke of injection molding machines (GR05.023, GR05.024)

> See page 13

SR Series – manual quick-change system

> Three sizes with load capacity of 20, 40 and 100 kg
> Secure snap-on coupling SAFE-LOCK
> Locking position optically indicated (red/green)
> Model MV comes with micro valves for automatic air lock off during decoupling

> See page 20

Accessories

> Plates to adapt SLine and MLine extrusions directly to round quick-changers
> Fits to round quick-changers from FIPA and other brands
> Wall brackets for safe storing of gripper systems

ASR Series – automatic quick-change system

> Two sizes with load capacity of 5 and 20 kg
> Secure locking system with guide pins, compensates positional deviations during coupling
> Optional electric plug connectors for transmitting up to eight sensor signals

> See page 42

info@hidrafluid.es
976 24 32 10

Quick-change systems – square, robot side, without fittings

GR05.041

GR05.041 incl. quick-connection couplers

Product notes

> Manual interface between robot and gripper system
> Minimized down time due to fast gripper change
> Available in four sizes
> Clamping levers included in scope of delivery
> Base plates and pneumatic connections not included in scope of delivery

Technical data

Item no.	Industry standard code	Number of pneumatic connections	Compatible hose Ø [mm]	Lifting force [N]	Weight [g]	Accessories
GR05.041	GR-0	5	6	50	315	Gripper mounting plate: GR05.042 (p.15) Quick-connection coupler: KIT1-GR05.041
GR05.021	GR-1	5	6	100	570	Gripper mounting plate: GR05.022 (p.15) Quick-connection coupler: KIT1-GR05.021
GR05.031	GR-2	5	6 / 8	200	1,970	Gripper mounting plate: GR05.032 (p.15) Gripper mounting plate: GR-XL05.032 (p.15) Quick-connection coupler: KIT1-GR05.031
GR05.051	GR-3	5	6 / 8	400	4,520	Gripper mounting plate: GR05.052 (p.15) Gripper mounting plate: GR-XL05.052 (p.15) Quick-connection coupler: KIT1-GR05.031

Dimensions

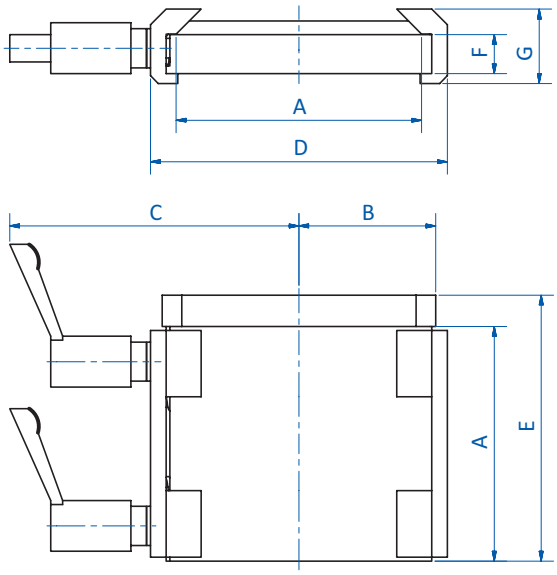

GR05.041 | GR05.021

info@hidrafluid.es
976 24 32 10

Dimensions

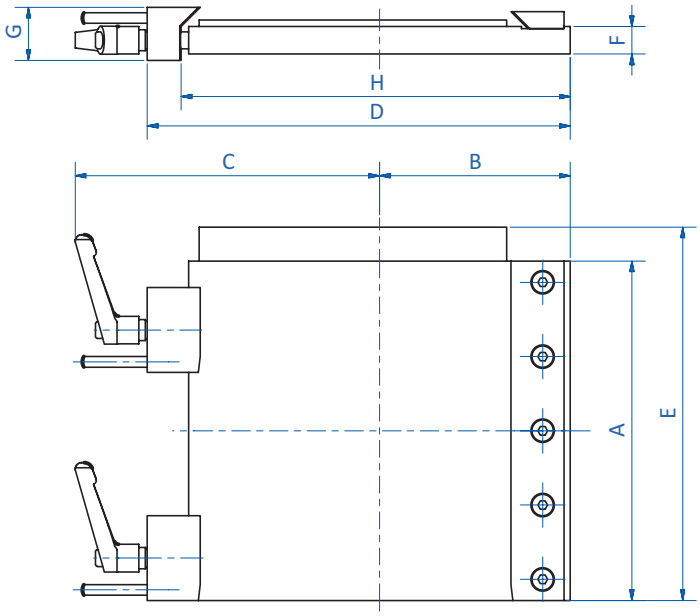

GR05.031

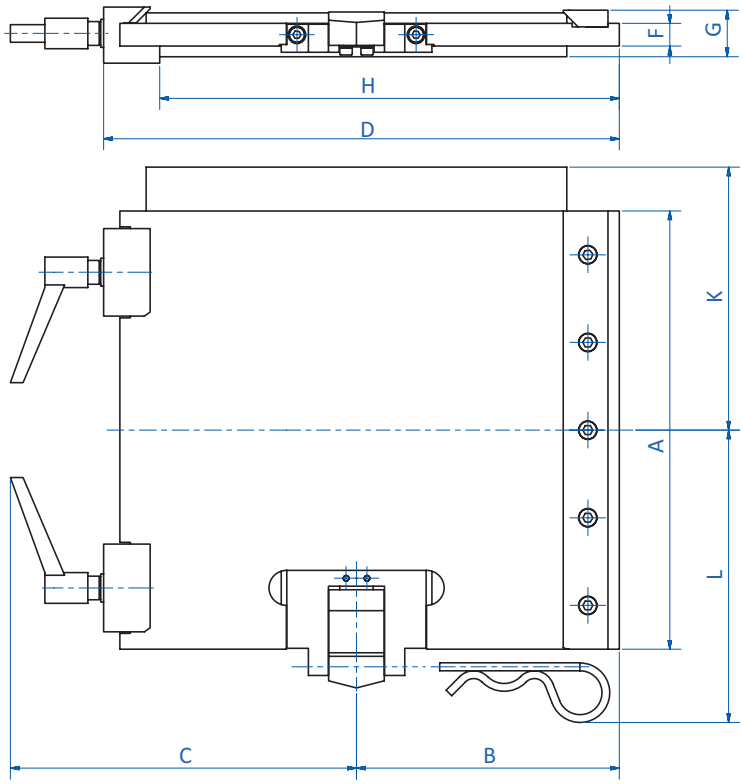

GR05.051

Item no.	A [mm]	B [mm]	C [mm]	D [mm]	E [mm]	F [mm]	G [mm]	H [mm]	K [mm]	L [mm]
GR05.041	60	38	74	76	68	10	19	62	--	--
GR05.021	100	57.5	91.5	115	110	10	20	101	--	--
GR05.031	160	90	143.5	198	176	13	25	183	--	--
GR05.051	250	150	197.5	290	--	13	32	259	150	167

FIPA challenge accepted
info@hidrafluid.es
976 24 32 10

Gripper mounting plates

Product notes

> Suitable for square quick-change systems GR05.021 to GR05.051
> Base plates with pre-located, center-punched holes enable custom drilling patterns (index -X)
> Slot nuts and mounting screws included in scope of delivery, except for base plates index -X

Technical data

Item no.	Industry standard code	Suitable for extrusion system	Weight [g]	Suitable robot adapter plates
GR05.042	GR-0	SLine / MLine	84	GR05.041 (p.13)
GR05.022	GR-1	SLine / MLine	230	GR05.021 (p.13)
GR05.032	GR-2	SLine / MLine	635	GR05.031 (p.13)
GR05.052	GR-3	SLine / MLine	1,650	GR05.051 (p.13)
GR-XL05.032	GR-2	XLine	752	GR05.031 (p.13)
GR-XL05.052	GR-3	XLine	1,784	GR05.051 (p.13)
GR05.042-X	GR-0	SLine / MLine	84	GR05.041 (p.13)
GR05.022-X	GR-1	SLine / MLine	208	GR05.021 (p.13)
GR05.032-X	GR-2	SLine / MLine	635	GR05.031 (p.13)
GR05.052-X	GR-3	SLine / MLine	1,650	GR05.051 (p.13)

Dimensions

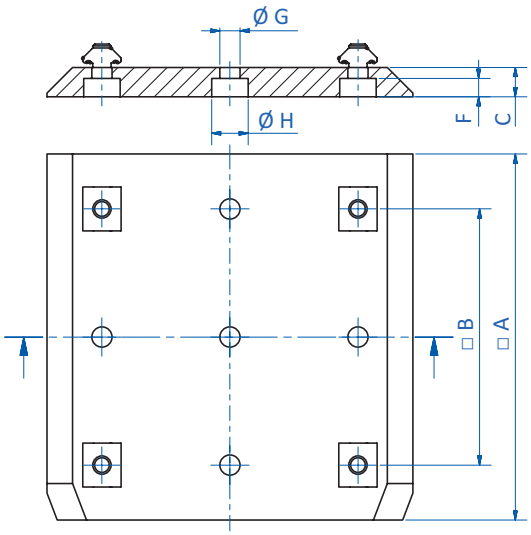

GR05.042 | GR05.022 | GR05.032 | GR05.052 | GR-XL05.032 | GR-XL05.052

Continued on the next page

info@hidrafluid.es
976 24 32 10

Dimensions

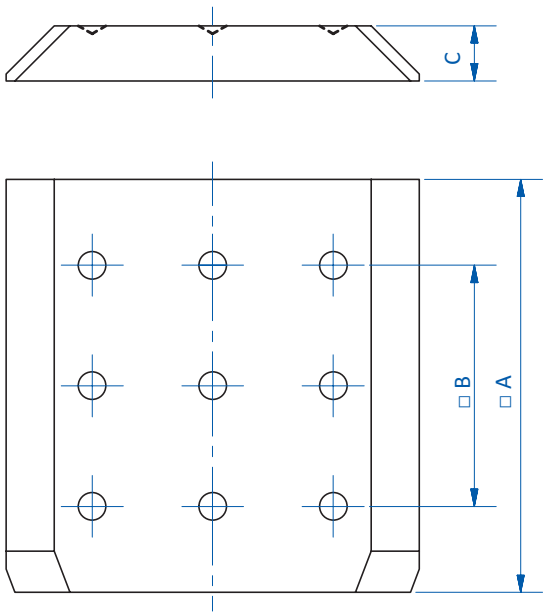

GR05.042-X

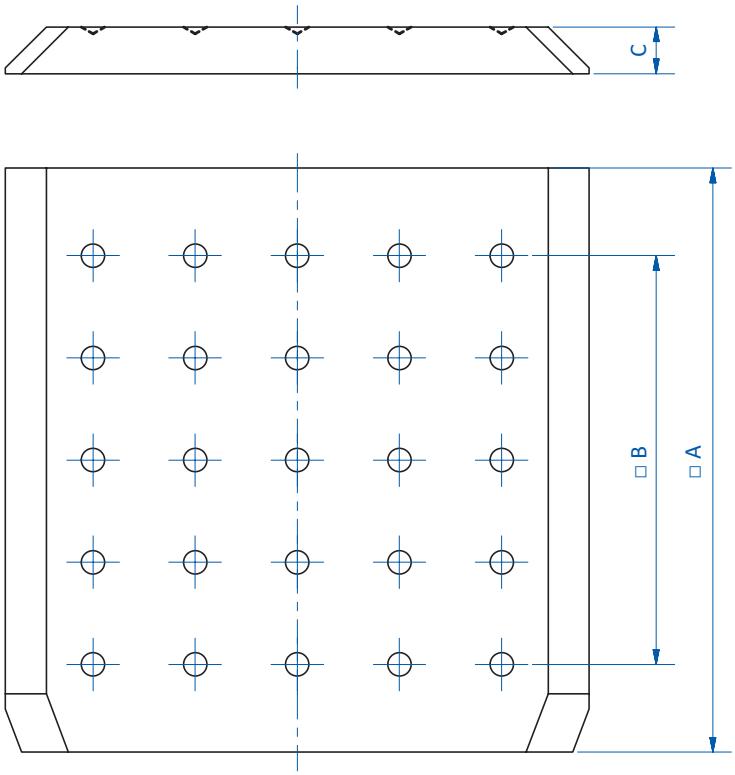

GR05.022-X | GR05.032-X

FIPA challenge accepted

info@hidrafluid.es
976 24 32 10

Dimensions

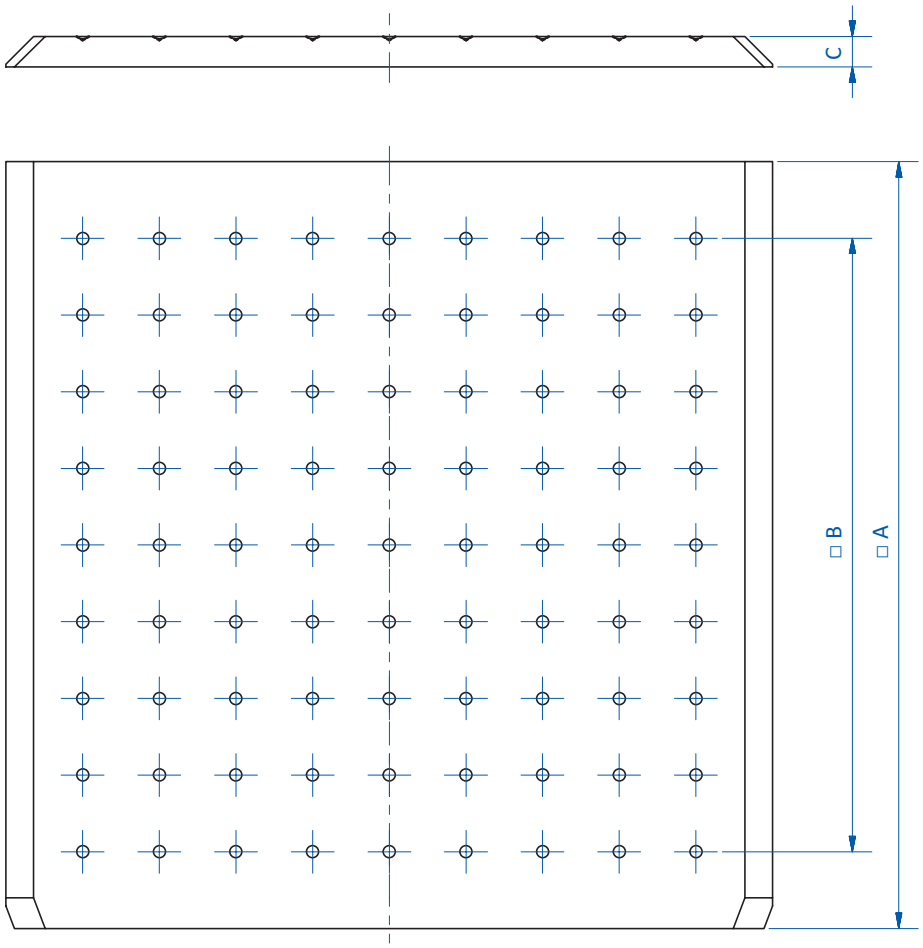

GR05.052-X

Item no.	□ **A** [mm]	□ **B** [mm]	**C** [mm]	**F** [mm]	**Ø G** [mm]	**Ø H** [mm]
GR05.042	60	35	8	5	5.5	10
GR05.022	100	70	8	5	5.5	10
GR05.032	160	120	10	4.5	5.5	10
GR05.052	250	200	10	7	5.5	10
GR-XL05.032	160	120	10	6.5	8.5	14
GR-XL05.052	250	200	10	6.5	8.5	14
GR05.042-X	60	35	8	--	--	--
GR05.022-X	100	70	8	--	--	--
GR05.032-X	160	120	10	--	--	--
GR05.052-X	250	200	10	--	--	--

info@hidrafluid.es
976 24 32 10

Gripper mounting plates – spring loaded

Gripper mounting plate with quick-change system GR05.021

Product notes

> Base plate for compensating ejection stroke of molding machine
> High-quality slide bearings ensure accurate guidance
> A second set of springs with higher spring rate included in scope of delivery
> Slot nuts and mounting screws included in scope of delivery

Technical data

Item no.	Suitable for extrusion system	Industry standard code	Stroke [mm]	Spring stiffness (already built in) [N/mm]	Spring stiffness (alternatively) [N/mm]	Weight [g]	Suitable robot adapter plates
GR05.023	SLine	GR-1	30	0.143	0.349	690	GR05.021 (p.13)
GR05.024	SLine / MLine	GR-1	30	0.143	0.349	690	GR05.021 (p.13)

Dimensions

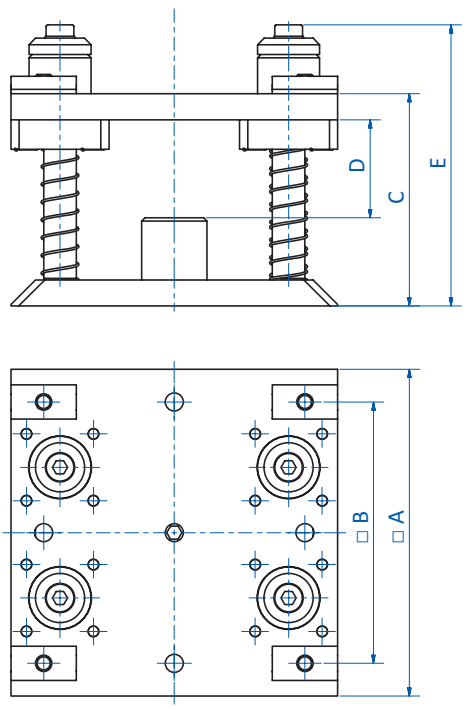

Item no.	□ A [mm]	□ B [mm]	C [mm]	D [mm]	E [mm]
GR05.023	100	80	65	30	86
GR05.024	110	85	65	30	86

FIPA challenge accepted

info@hidrafluid.es
976 24 32 10

Wall brackets for square quick-change plates

Wall bracket with quick-change plate

Product notes

> Efficient storage of gripping systems
> Fixing kit included in delivery

Technical data

Item no.	Weight [g]	Compatible gripper mounting plate
GR05.042-W	145	GR05.042 (p.15)
GR05.022-W	212	GR05.022 (p.15)
GR05.032-W	385	GR05.032 (p.15)
GR05.052-W	1,218	GR05.052 (p.15)

Dimensions

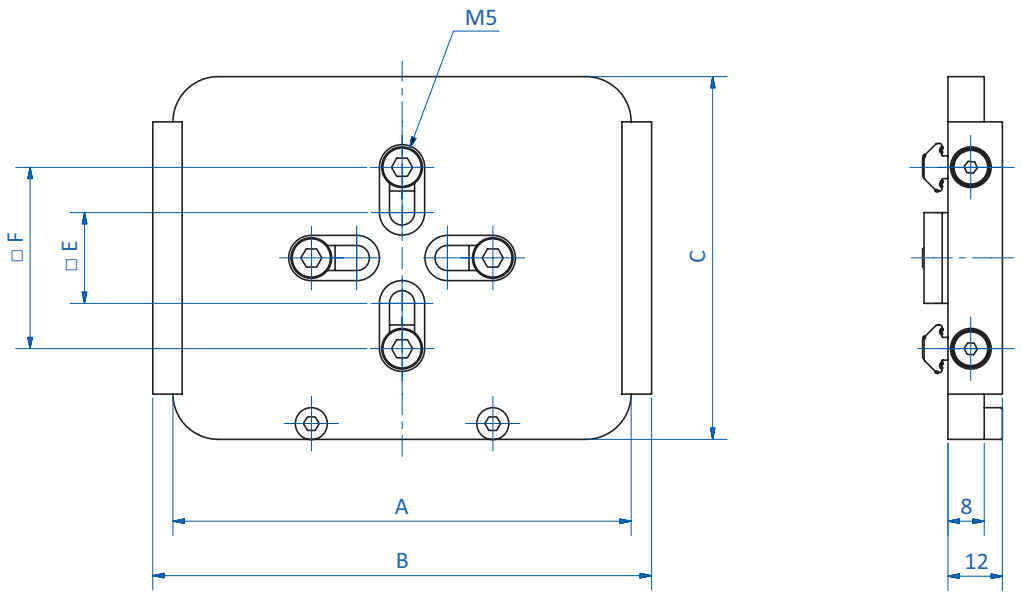

Item no.	A [mm]	B [mm]	C [mm]	□ E [mm]	□ F [mm]
GR05.042-W	60	70	80	20	40
GR05.022-W	101	110	80	20	40
GR05.032-W	161	170	100	20	40
GR05.052-W	251	260	200	60	120

info@hidrafluid.es
976 24 32 10

Round quick-changers Ø 50 mm, 6 air inlets – robot side

SR50-A-SL-MV with optical locking indication SAFE-LOCK

Product notes

> Manual interface between robot and gripper system
> Air connections always correctly aligned
> Body made of anodized aluminum alloy
> Model MV comes with micro valves for automatic air or vacuum lock off during decoupling
> Model SL with secure SAFE-LOCK ensures maximum functional reliability and optical locking indication (red/green)
> Stainless steel design on request

Technical data

Item no.	SR50-A	SR50-A-MV	SR50-A-SL	SR50-A-SL-MV
Lifting force [N]	200	200	200	200
Number of pneumatic connections	6xM5	6xM5	6xM5	6xM5
Working pressure [bar (psi)]	0 - 6 (0 - 87)	0 - 6 (0 - 87)	0 - 6 (0 - 87)	0 - 6 (0 - 87)
Max. torque [Nm]	50	50	50	50
Max. bending moment [Nm]	30	30	30	30
Repeat accuracy [mm]	+/- 0.025	+/- 0.025	+/- 0.025	+/- 0.025
Micro valves	--	integrated	--	integrated
Snap-on	--	--	SAFE-LOCK for secure locking	SAFE-LOCK for secure locking
Weight [g]	65	65	65	65
Accessories	Electrical connectors: 20.537 (p.38) Spare part kit: KIT-SR50	Electrical connectors: 20.537 (p.38) Spare part kit: KIT-SR50	Electrical connectors: 20.537 (p.38) Spare part kit: KIT-SR50	Electrical connectors: 20.537 (p.38) Spare part kit: KIT-SR50

Display of optical locking indication SAFE-LOCK

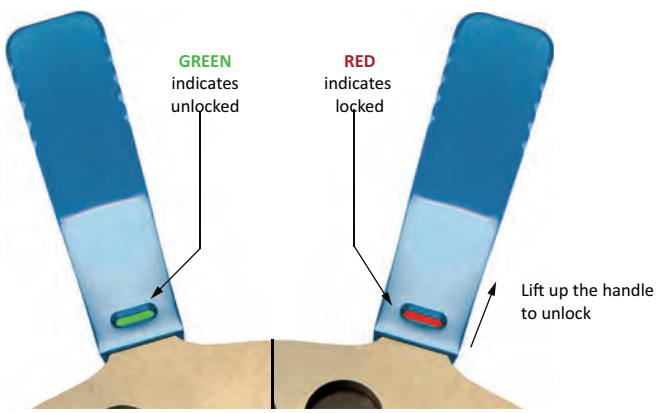

FIPA challenge accepted

info@hidrafluid.es
976 24 32 10

Dimensions

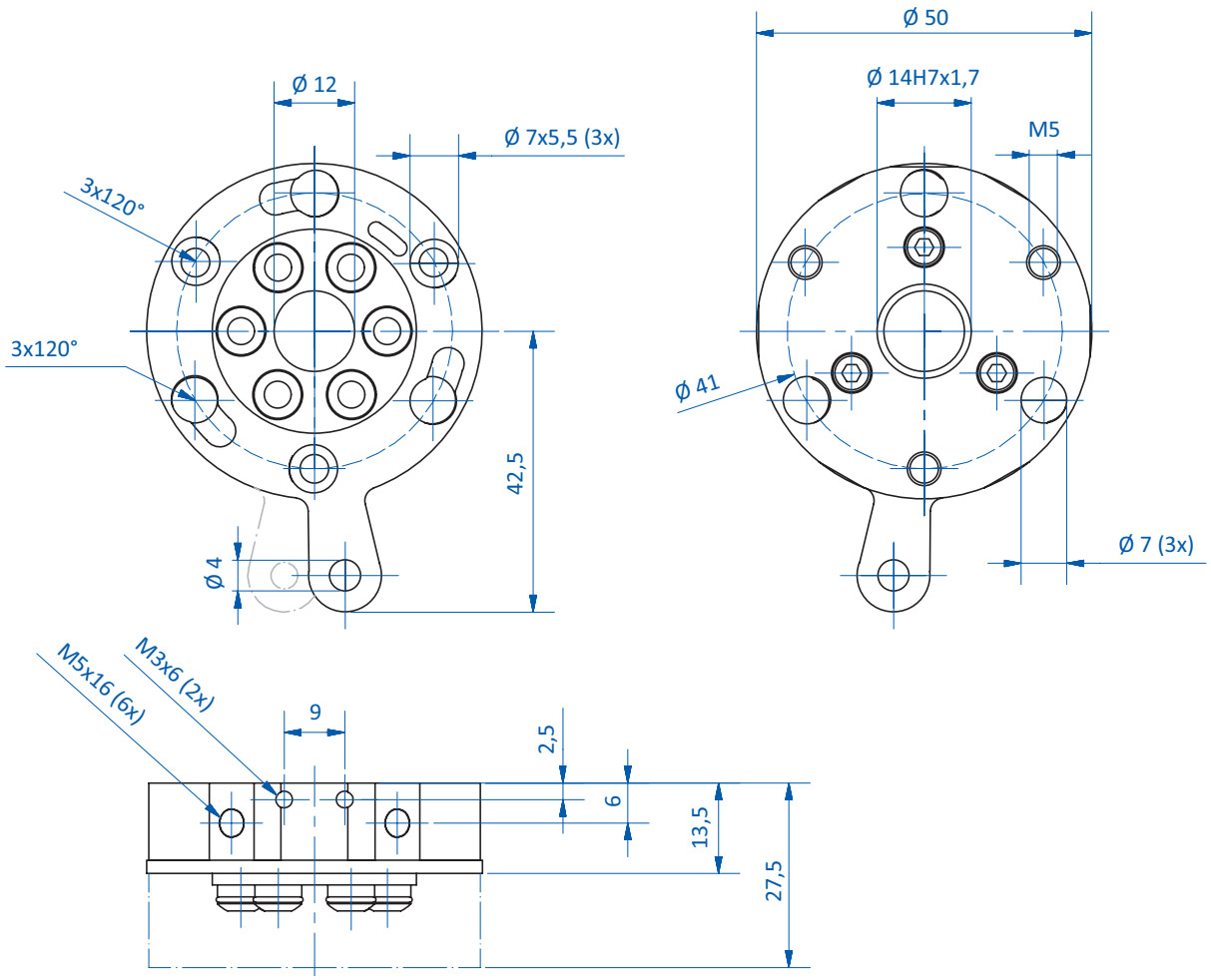

SR50-A | SR50-A-MV

Continued on the next page

info@hidrafluid.es
976 24 32 10

Dimensions

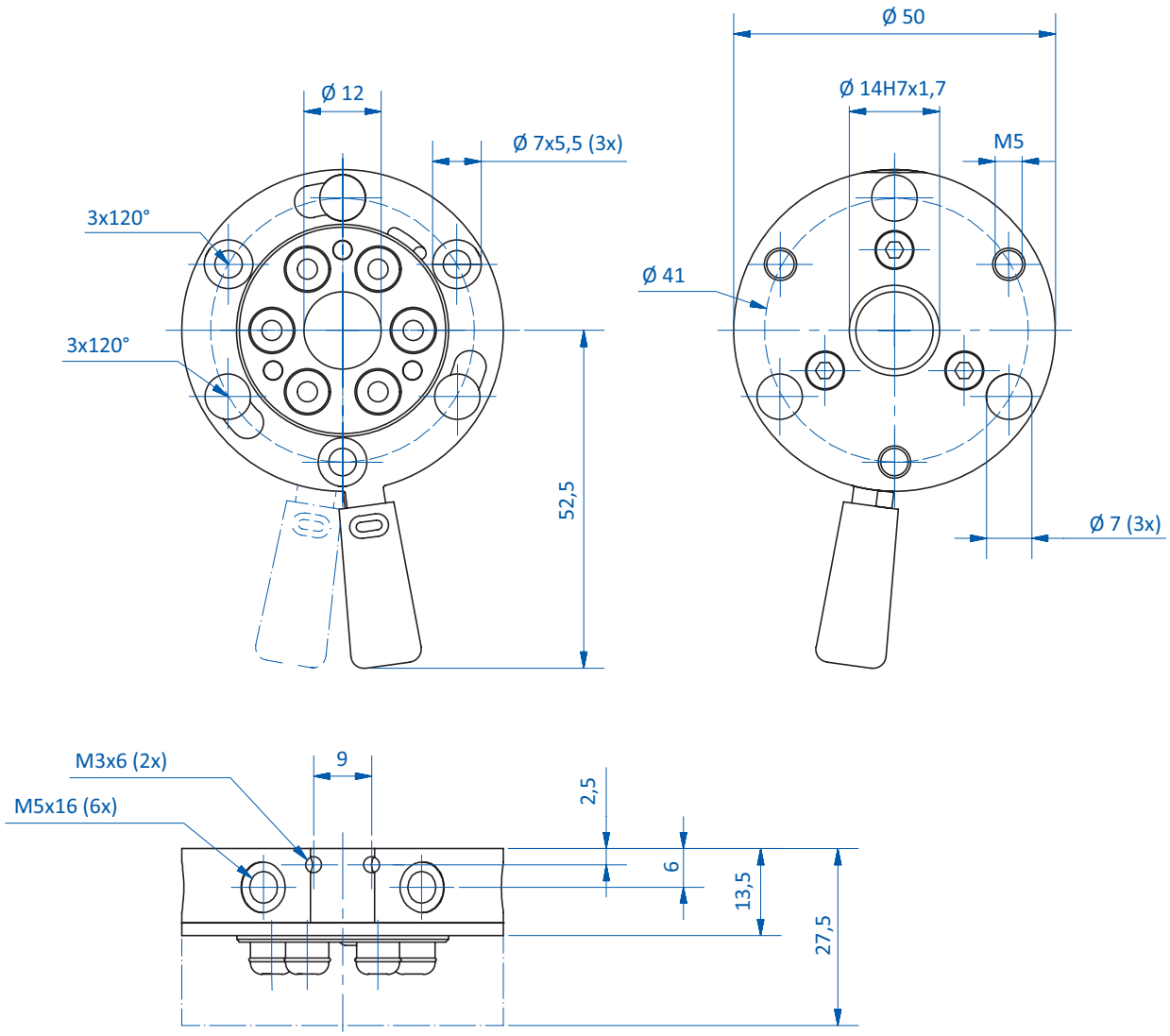

SR50-A-SL | SR50-A-SL-MV

FIPA challenge accepted
info@hidrafluid.es
976 24 32 10

Round quick-changers Ø 50 mm, 6 air inlets – gripper side

Product notes

> Manual interface between robot and gripper system
> Air connections always correctly aligned
> Body made of anodized aluminum alloy
> Stainless steel design on request

Technical data

Item no.	SR50-B
Lifting force [N]	200
Number of pneumatic connections	6xM5
Working pressure [bar (psi)]	0 - 6 (0 - 87)
Max. torque [Nm]	50
Max. bending moment [Nm]	30
Repeat accuracy [mm]	+/- 0.025
Weight [g]	69
Suitable electrical connectors	20.538 (p.38)

Dimensions

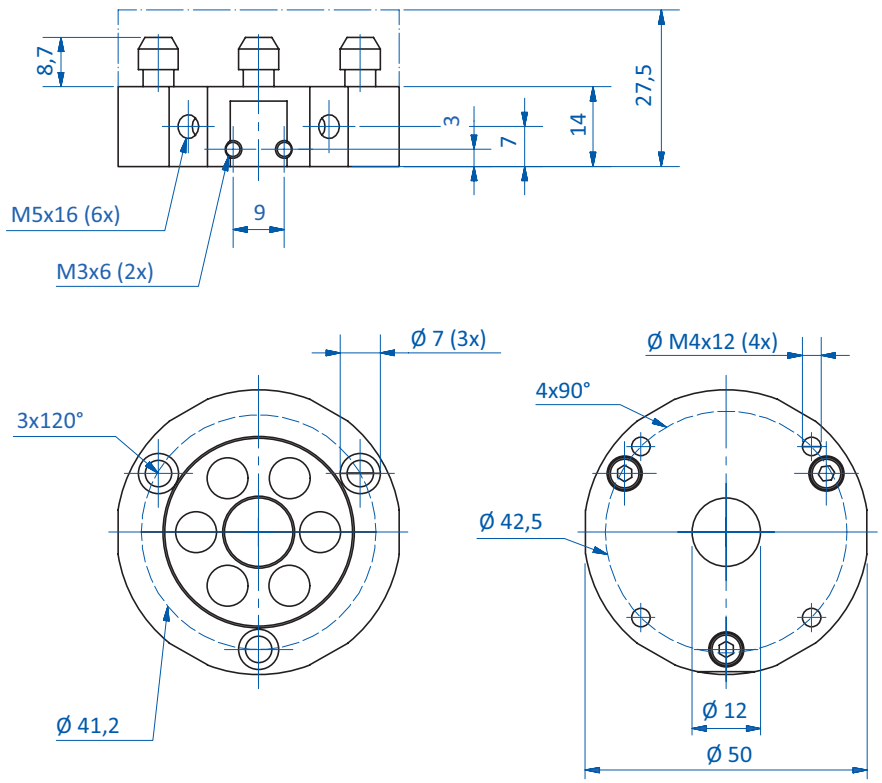

info@hidrafluid.es
976 24 32 10

Round quick-changers Ø 90 mm, 8 air inlets – robot side

SR90-A-SL with optical locking indication SAFE-LOCK

Product notes

> Manual interface between robot and gripper system
> Air connections always correctly aligned
> Body made of anodized aluminum alloy
> Model MV comes with micro valves for automatic air or vacuum lock off during decoupling
> Model SL with secure SAFE-LOCK ensures maximum functional reliability and optical locking indication (red/green)
> Stainless steel design on request

Technical data

Item no.	SR90-A	SR90-A-MV	SR90-A-SL	SR90-A-SL-MV
Lifting force [N]	400	400	400	400
Number of pneumatic connections	8xG1/8	8xG1/8	8xG1/8	8xG1/8
Working pressure [bar (psi)]	0 - 6 (0 - 87)	0 - 6 (0 - 87)	0 - 6 (0 - 87)	0 - 6 (0 - 87)
Max. torque [Nm]	100	100	100	100
Max. bending moment [Nm]	60	60	60	60
Repeat accuracy [mm]	+/- 0.025	+/- 0.025	+/- 0.025	+/- 0.025
Micro valves	--	integrated	--	integrated
Snap-on	--	--	SAFE-LOCK for secure locking	SAFE-LOCK for secure locking
Weight [g]	320	320	320	320
Accessories	Electrical connectors: 20.536 (p.38) Spare part kit: KIT-SR90	Electrical connectors: 20.536 (p.38) Spare part kit: KIT-SR90	Electrical connectors: 20.535 (p.38) Spare part kit: KIT-SR90	Electrical connectors: 20.535 (p.38) Spare part kit: KIT-SR90

Display of optical locking indication SAFE-LOCK

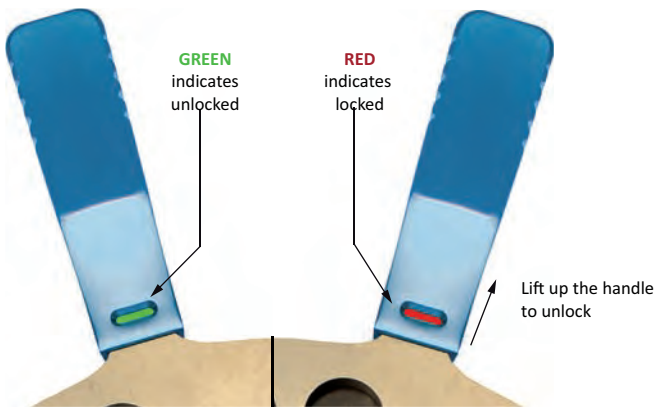

FIPA challenge accepted

info@hidrafluid.es
976 24 32 10

Dimensions

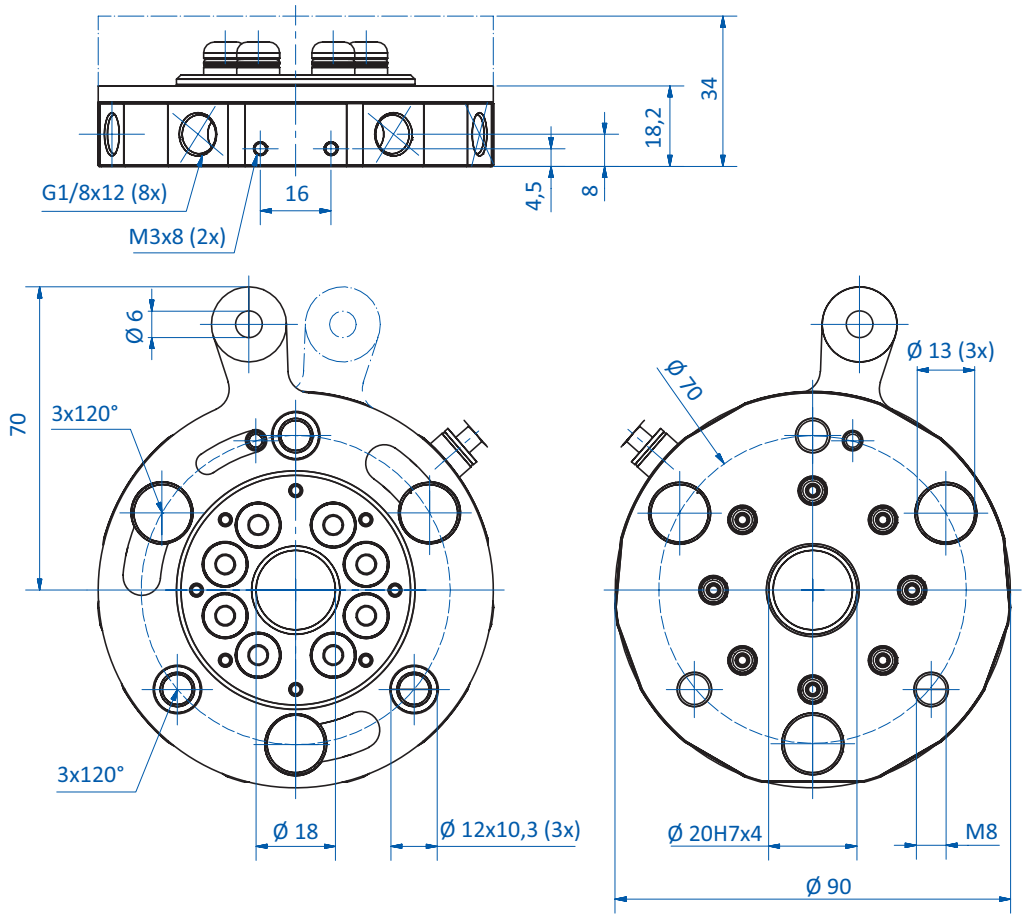

SR90-A | SR90-A-MV

Continued on the next page

info@hidrafluid.es
976 24 32 10

Dimensions

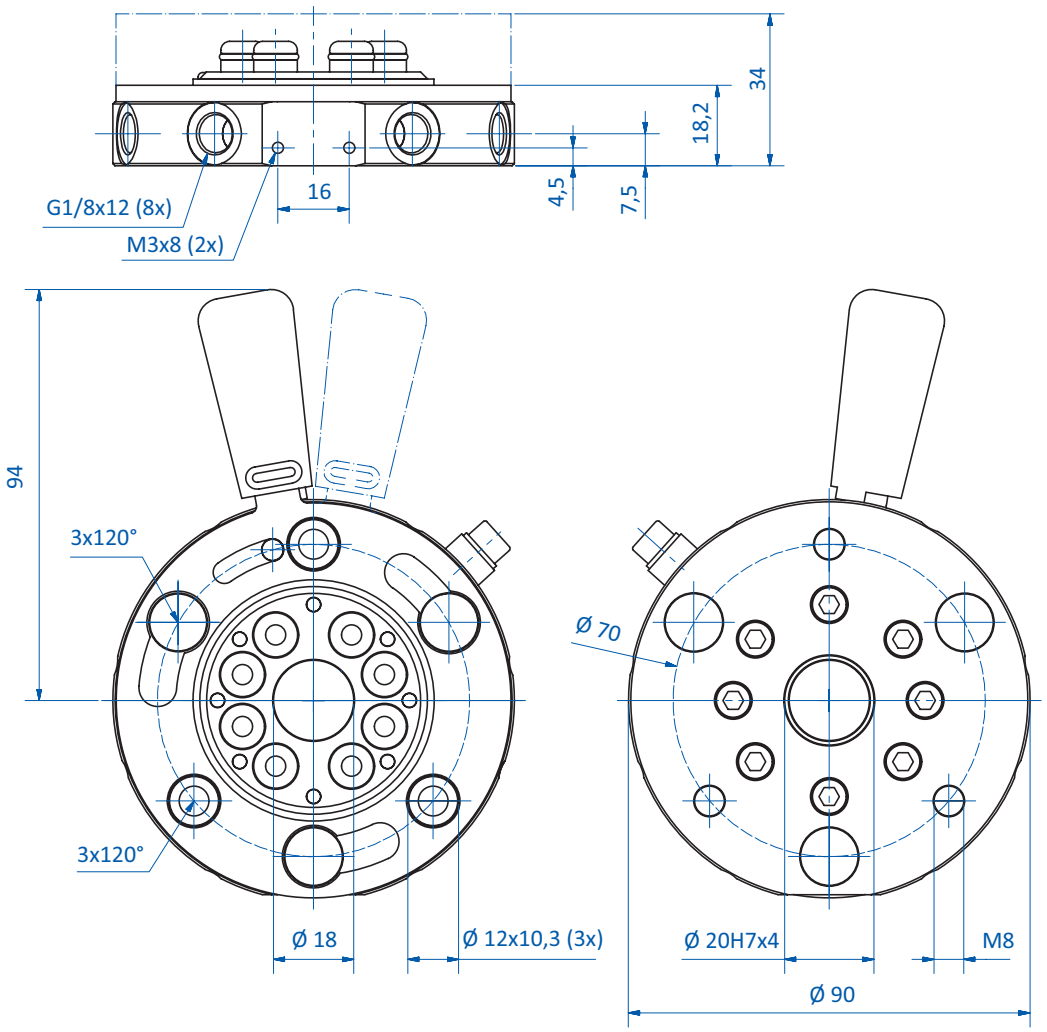

SR90-A-SL | SR90-A-SL-MV

FIPA challenge accepted
info@hidrafluid.es
976 24 32 10

Round quick-changers Ø 90 mm, 8 air inlets – gripper side

Product notes

> Manual interface between robot and gripper system
> Air connections always correctly aligned
> Body made of anodized aluminum alloy
> Stainless steel design on request

Technical data

Item no.	SR90-B
Lifting force [N]	400
Number of pneumatic connections	8xG1/8
Working pressure [bar (psi)]	0 - 6 (0 - 87)
Max. torque [Nm]	100
Max. bending moment [Nm]	60
Repeat accuracy [mm]	+/- 0.025
Weight [g]	220
Suitable electrical connectors	20.536 (p.38)

Dimensions

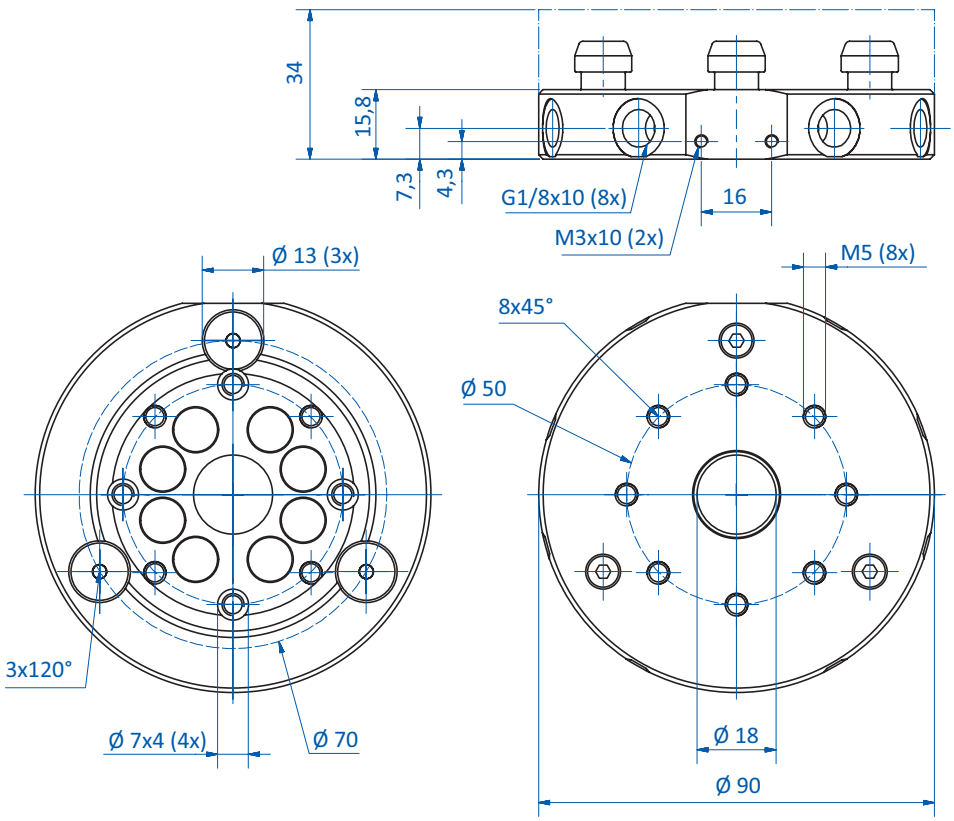

info@hidrafluid.es
976 24 32 10

Round quick-changers Ø 150 mm, 10 air inlets – robot side

SR150-A

Product notes

> Manual interface between robot and gripper system
> Air connections always correctly aligned
> Body made of anodized aluminum alloy
> Model SL with secure SAFE-LOCK ensures maximum functional reliability and optical locking indication (red/green)
> Stainless steel design on request

Technical data

Item no.	SR150-A	SR150-A-SL
Lifting force [N]	1,000	1,000
Number of pneumatic connections	10xG1/4	10xG1/4
Working pressure [bar (psi)]	0 - 6 (0 - 87)	0 - 6 (0 - 87)
Max. torque [Nm]	250	250
Max. bending moment [Nm]	100	100
Repeat accuracy [mm]	+/- 0.025	+/- 0.025
Micro valves	--	--
Snap-on	--	SAFE-LOCK for secure locking
Weight [g]	1,190	1,190
Accessories	Electrical connectors: 20.535 (p.38) Spare part kit: KIT-SR150	Electrical connectors: 20.535 (p.38) Spare part kit: KIT-SR150

Display of optical locking indication SAFE-LOCK

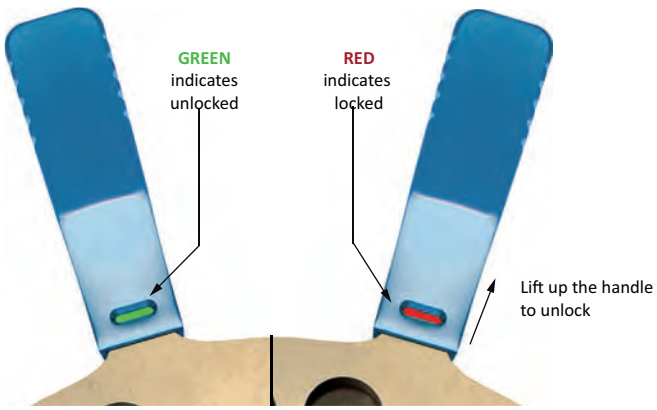

FIPA challenge accepted

info@hidrafluid.es
976 24 32 10

Dimensions

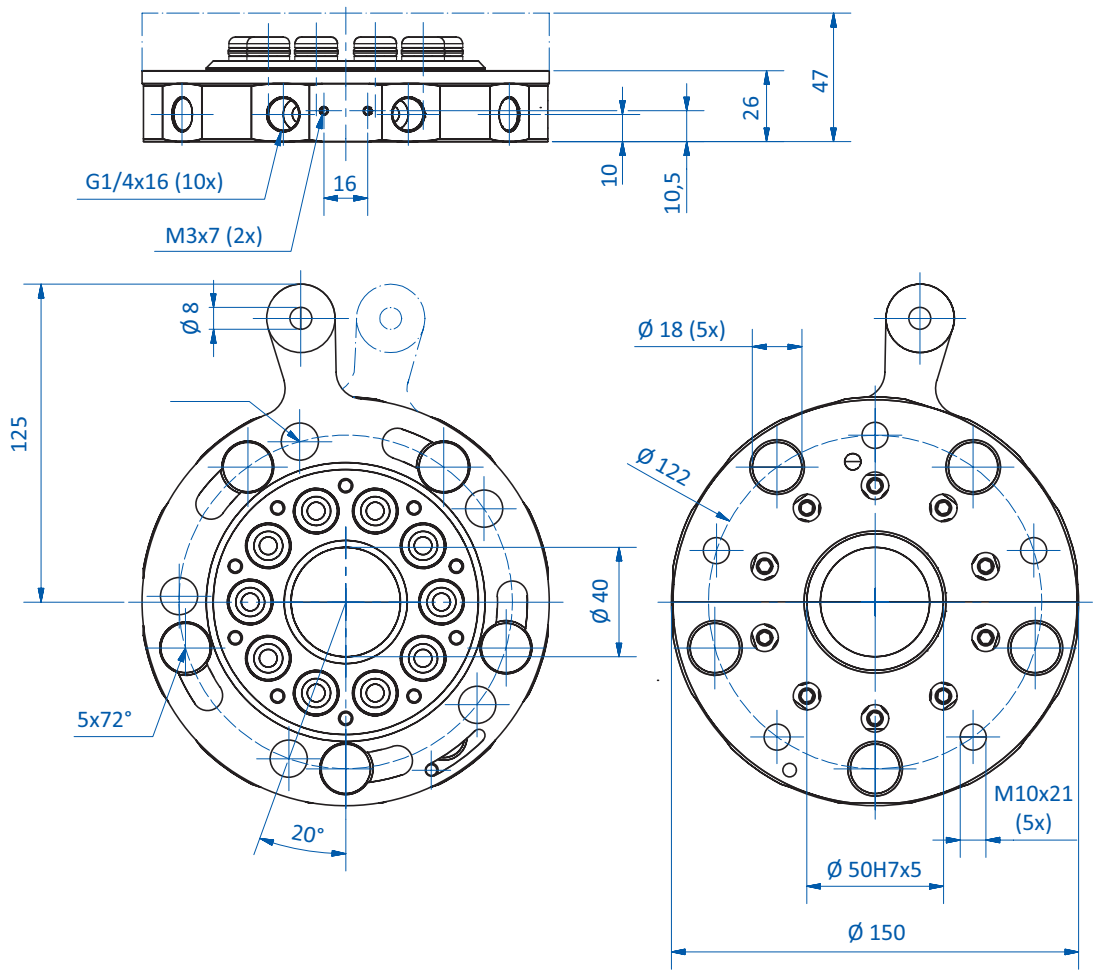

SR150-A

Continued on the next page

info@hidrafluid.es
976 24 32 10

Dimensions

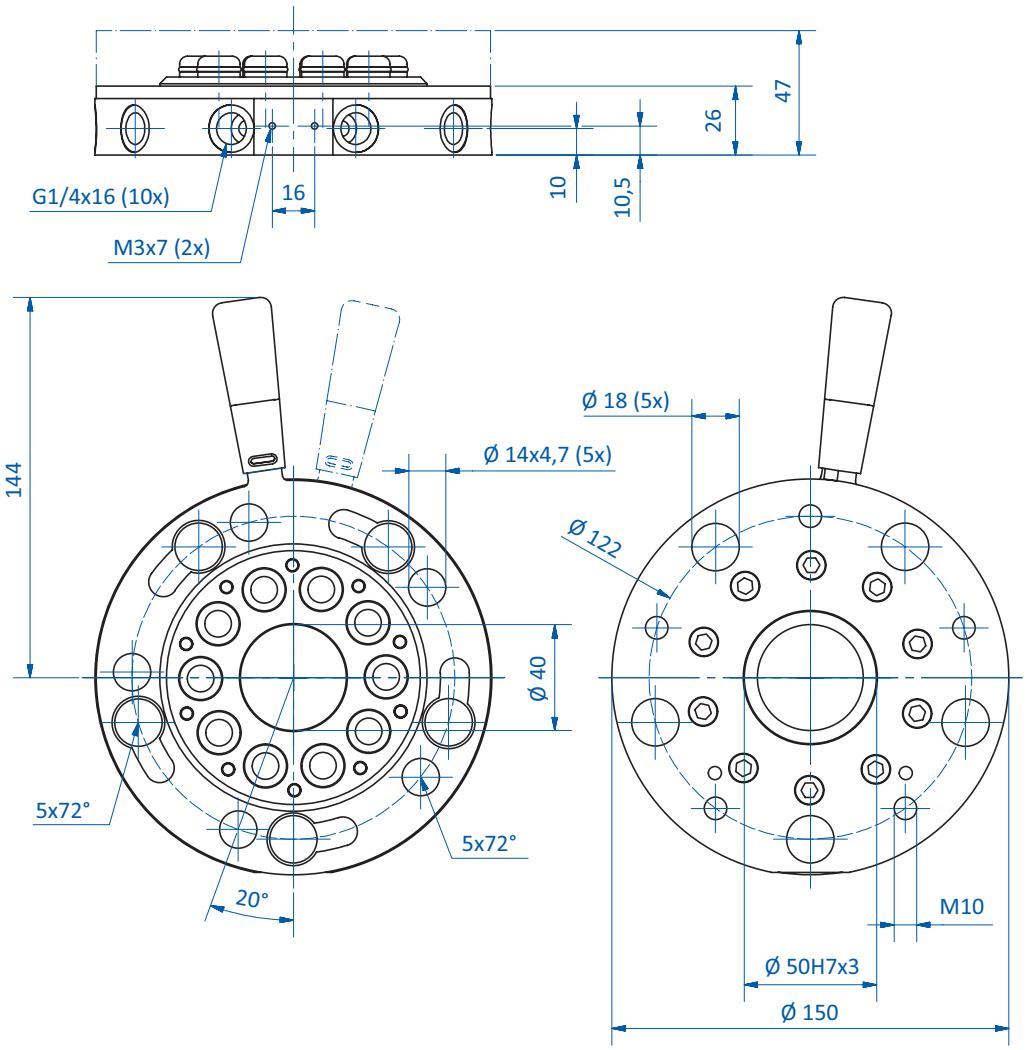

SR150-A-SL

info@hidrafluid.es
976 24 32 10

Round quick-changers Ø 150 mm, 10 air inlets – gripper side

Product notes

> Manual interface between robot and gripper system
> Air connections always correctly aligned
> Body made of anodized aluminum alloy
> Stainless steel design on request

Technical data

Item no.	SR150-B
Lifting force [N]	1,000
Number of pneumatic connections	10xG1/8
Working pressure [bar (psi)]	0 - 6 (0 - 87)
Max. torque [Nm]	250
Max. bending moment [Nm]	100
Repeat accuracy [mm]	+/- 0.025
Weight [g]	850
Suitable electrical connectors	20.536 (p.38)

Dimensions

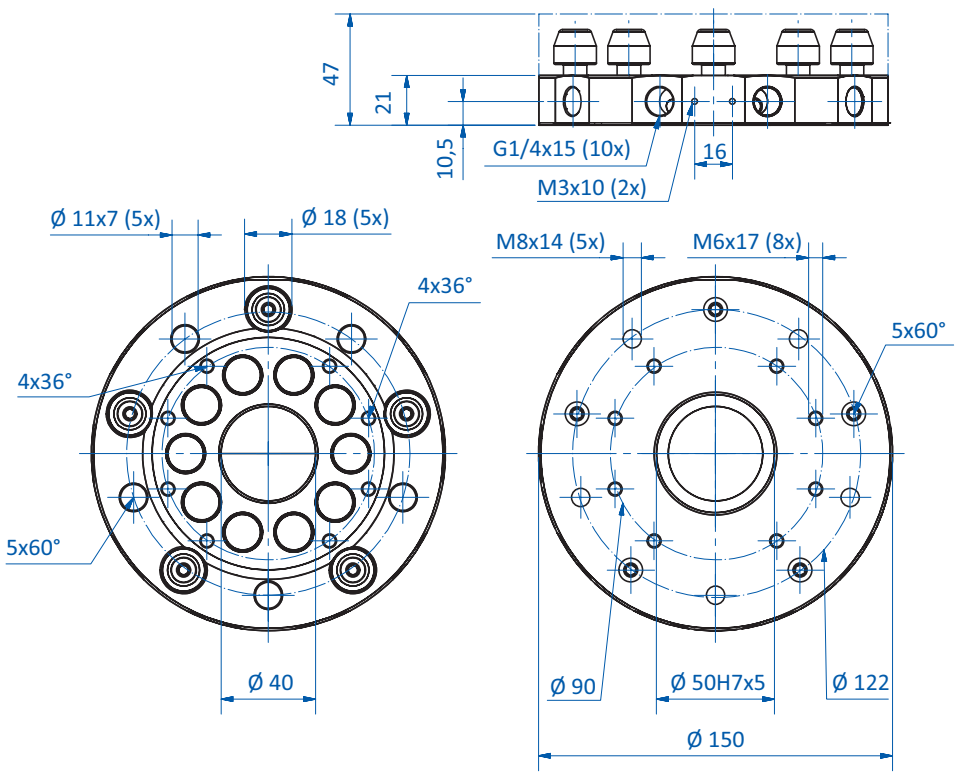

info@hidrafluid.es
976 24 32 10

Adapter plates for round quick-changers – gripper side

SR150-C

GR05.102

Product notes

> Adapter plates for mounting SLine or MLine extrusions to SR Series round quick-changers
> GR05.100, GR05.101, GR05.102: for SEPRO quick-changers
> Slot nuts and mounting screws included in scope of delivery
> Suitable for third-party systems

Technical data

Item no.	Weight [g]	Suitable quick-change systems
SR50-C	107	SR50-A (p.20), SR50-B (p.23)
SR90-C	117	SR90-A (p.24), SR90-B (p.27)
SR150-C	227	SR150-A (p.28), SR150-B (p.31)
GR05.100	236	SEPRO AM02S0716605
GR05.101	272	SEPRO BP 90
GR05.102	400	SEPRO BP 120

Robot adapter plates SR Series

SR50-C

SR90-C

SR150-C

Robot adapter plates SEPRO

GR05.100

GR05.101

GR05.102

info@hidrafluid.es
976 24 32 10

Dimensions

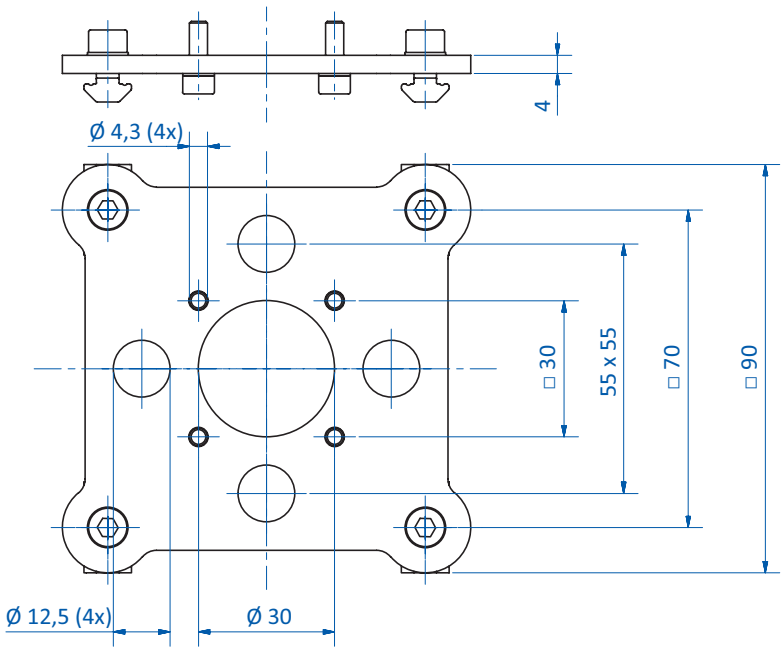

SR50-C

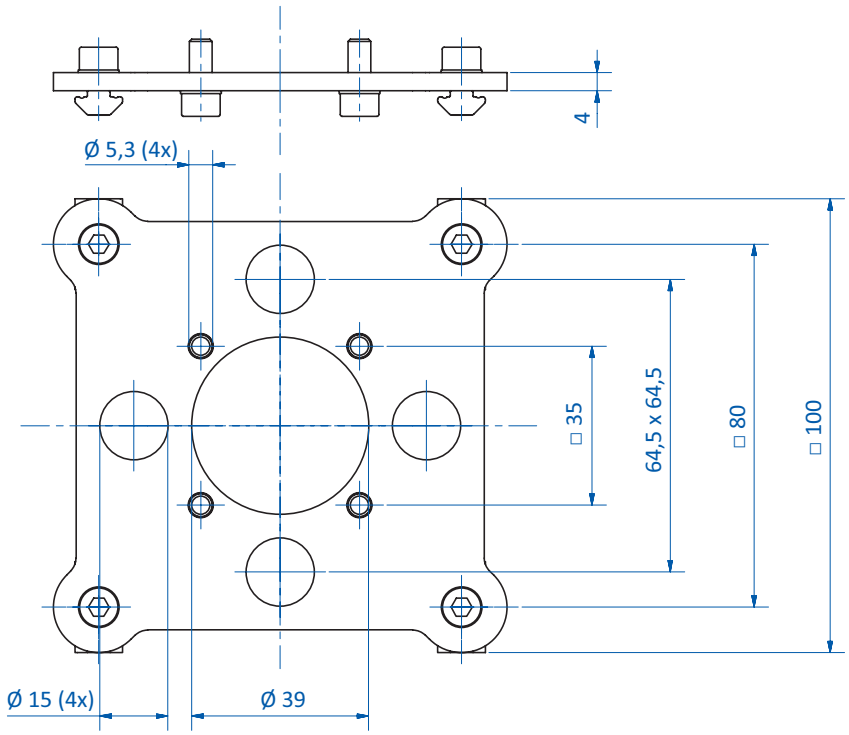

SR90-C

Continued on the next page

info@hidrafluid.es
976 24 32 10

Dimensions

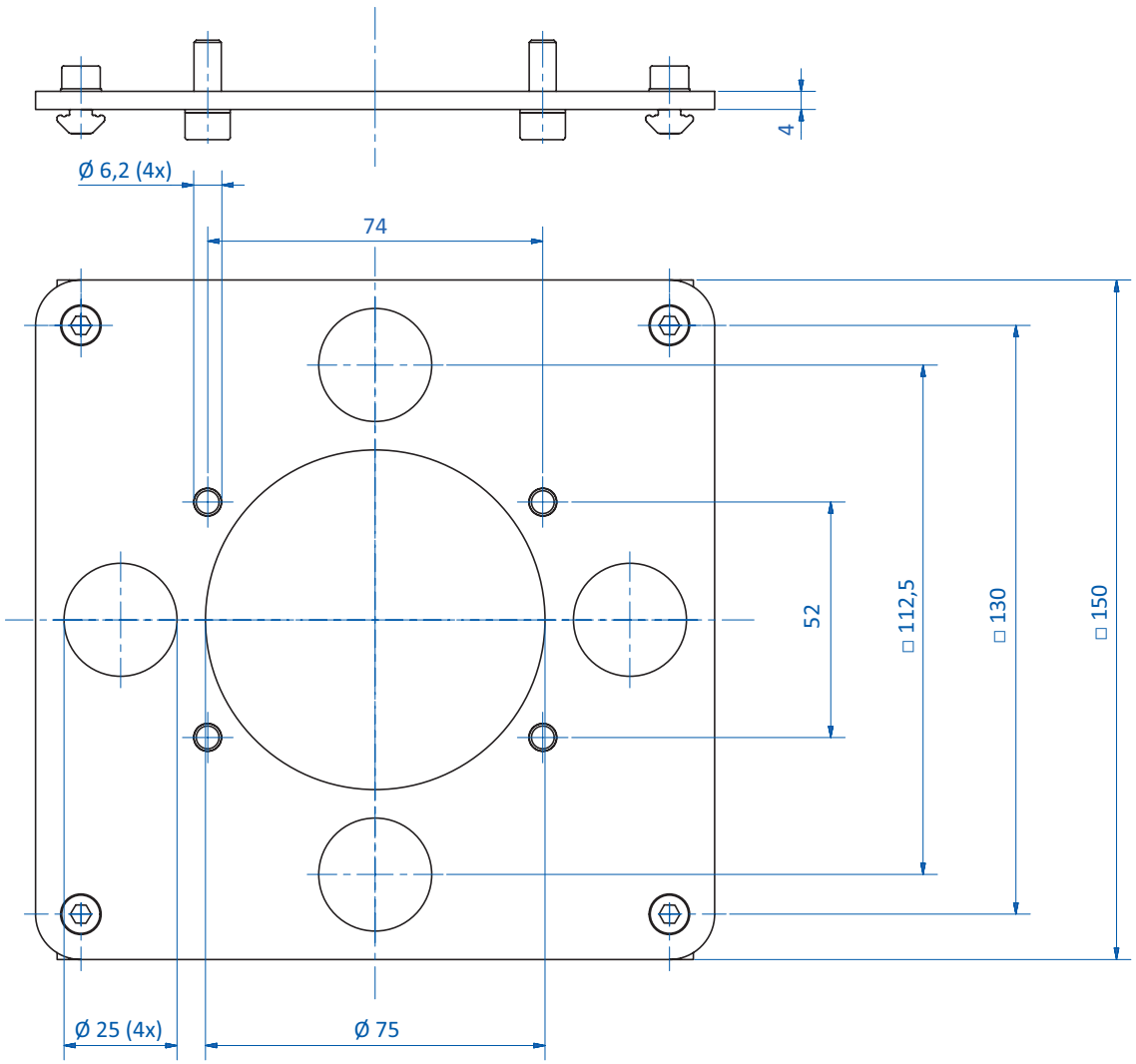

SR150-C

FIPA challenge accepted
info@hidrafluid.es
976 24 32 10

Dimensions

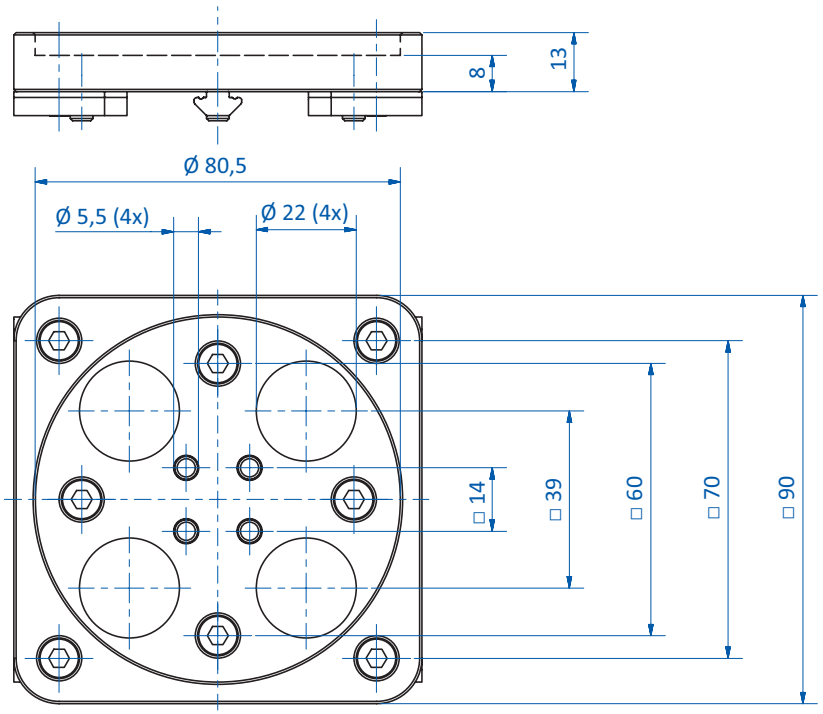

GR05.100

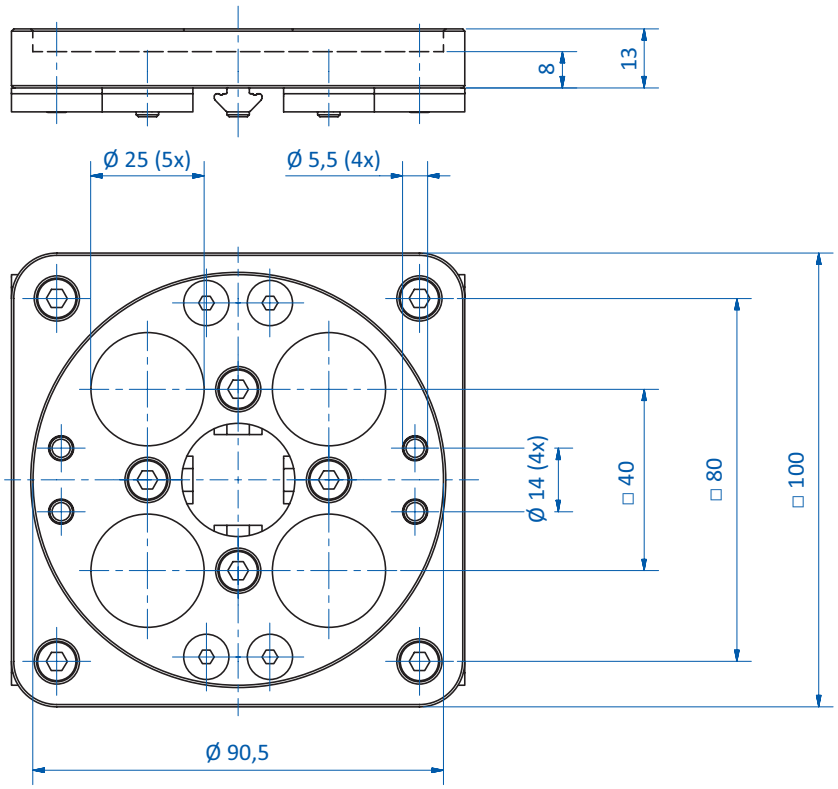

GR05.101

Continued on the next page

info@hidrafluid.es
976 24 32 10

Dimensions

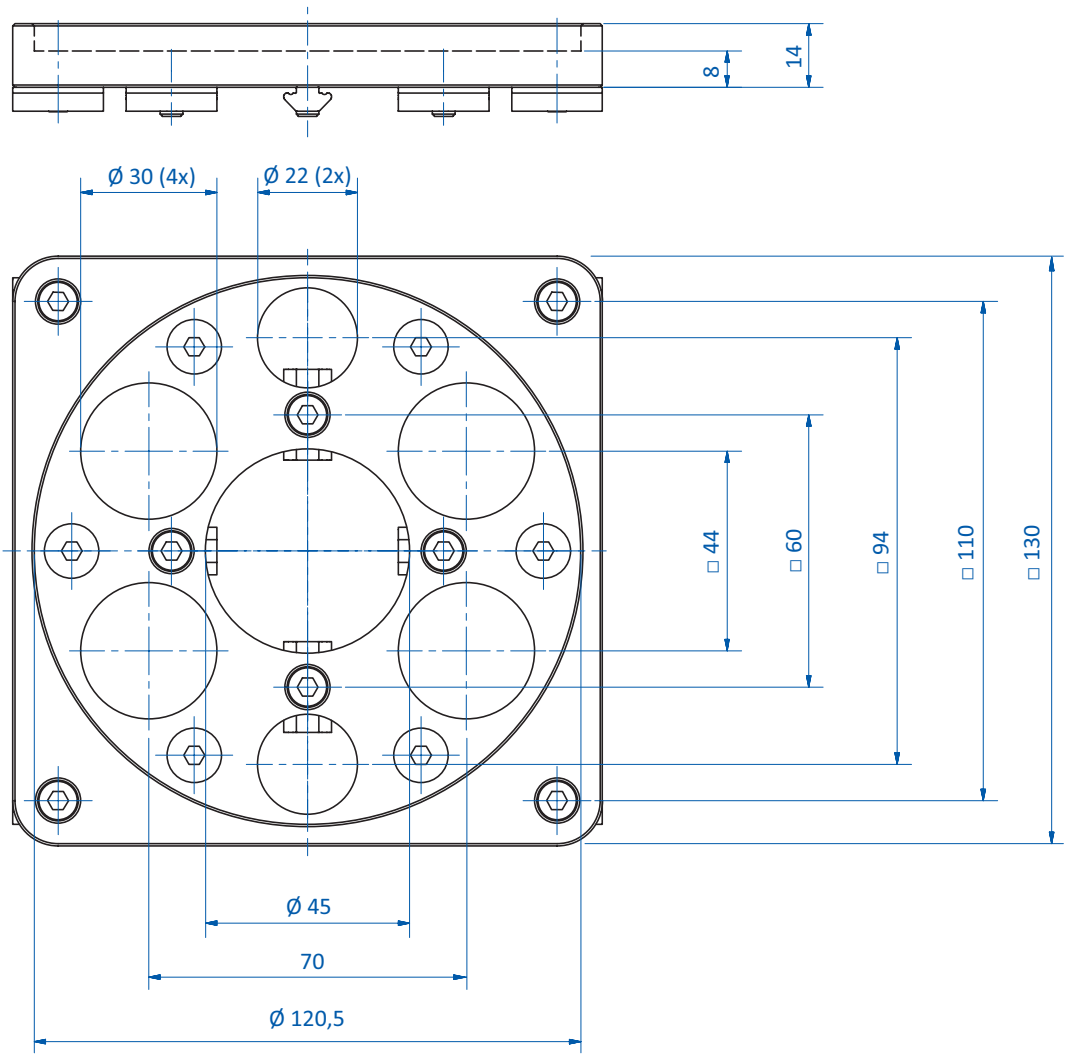

GR05.102

FIPA challenge accepted
info@hidrafluid.es
976 24 32 10

Wall bracket for gripper systems with round base plate

Application example with quick-changer

Product notes

> Efficient and safe storage of EOAT with SR Series round quick-changers
> Suitable for third-party round gripper systems

Technical data

Item no.	Weight [g]	Suitable quick-change systems
SR90-W	600	SR90-B (p.27)
SR150-W	1,200	SR150-B (p.31)

Dimensions

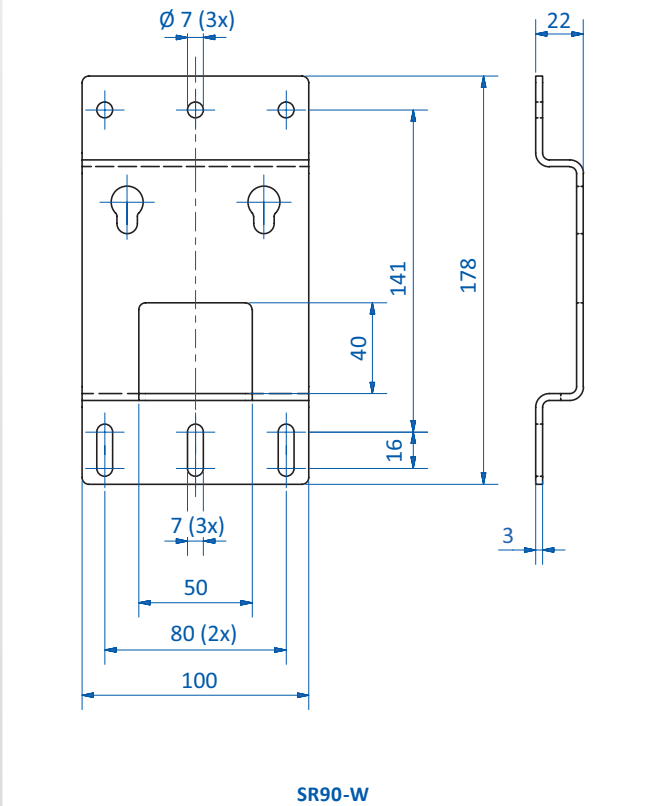

SR90-W

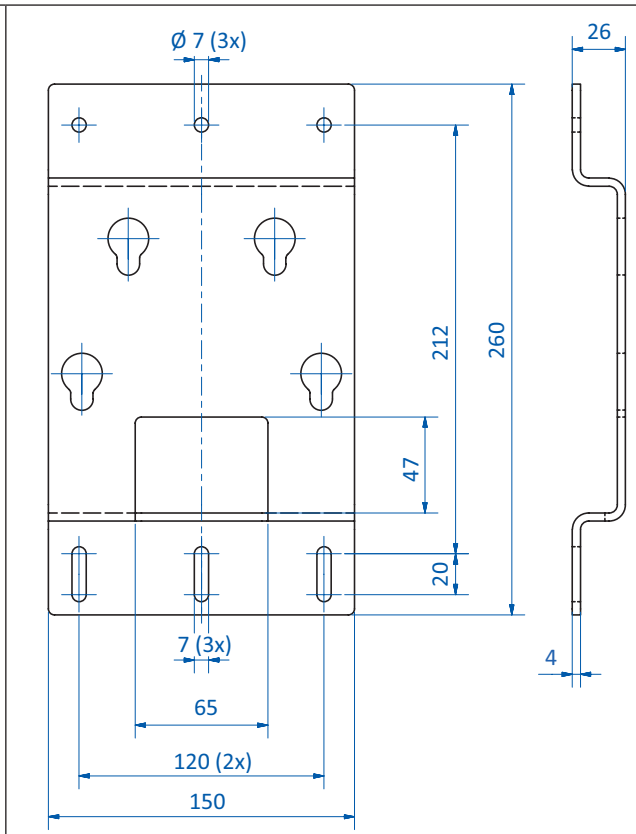

SR150-W

info@hidrafluid.es
976 24 32 10

Electric plug connectors for SR50, SR90 and SR150

Robot side 20.537 | Gripper side 20.538

Robot side 20.535 | Gripper side 20.536

Product notes

> Electrical interface between robot and gripper
> 15 pin SUB-D plug
> Max. cable cross section 0.14 mm² based on 16 - 18-wire cable

Technical data

Item no.	Suitable quick-change systems	Plug Design	Number of Pins	Operating voltage [VDC]	Power consumption [W]	Weight [g]	Suitable plug
20.535	SR90-A, SR150-A, SR90-A-SL, SR150-A-SL	male	15	24	0.5	42	20.505
20.536	SR90-B, SR150-B	female	15	24	0.5	41	20.505
20.537	SR50-A, SR50-A-SL, SR50-A-MV, SR50-A-SL-MV	male	9	24	0.5	42	20.505
20.538	SR50-B	female	9	24	0.5	41	20.505

SR Series with electric connectors

Dimensions

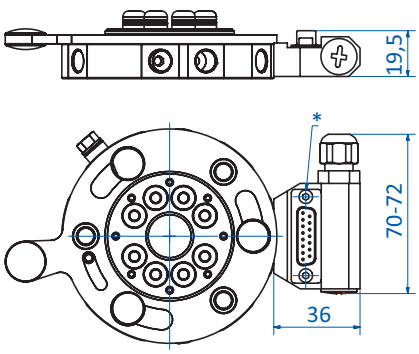

20.535 | 20.536

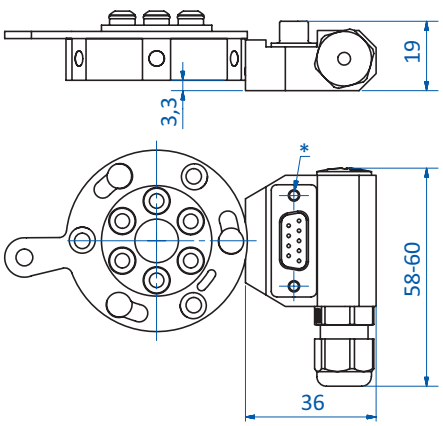

20.537 | 20.538

* = Remove plug connection for cable installation

FIPA challenge accepted
info@hidrafluid.es
976 24 32 10

Quick-change systems rectangle, robot side

COMPATIBLE WITH STAR SYSTEMS

Product notes

> Manual interface between robot and gripper system
> Minimized downtime due to fast gripper change
> Gripper side not included in scope of delivery

Technical data

Item no.	Lifting force [N]	Weight [g]	Suitable gripper side
GR05.121	150	168	GR05.122 (p.40)

Dimensions

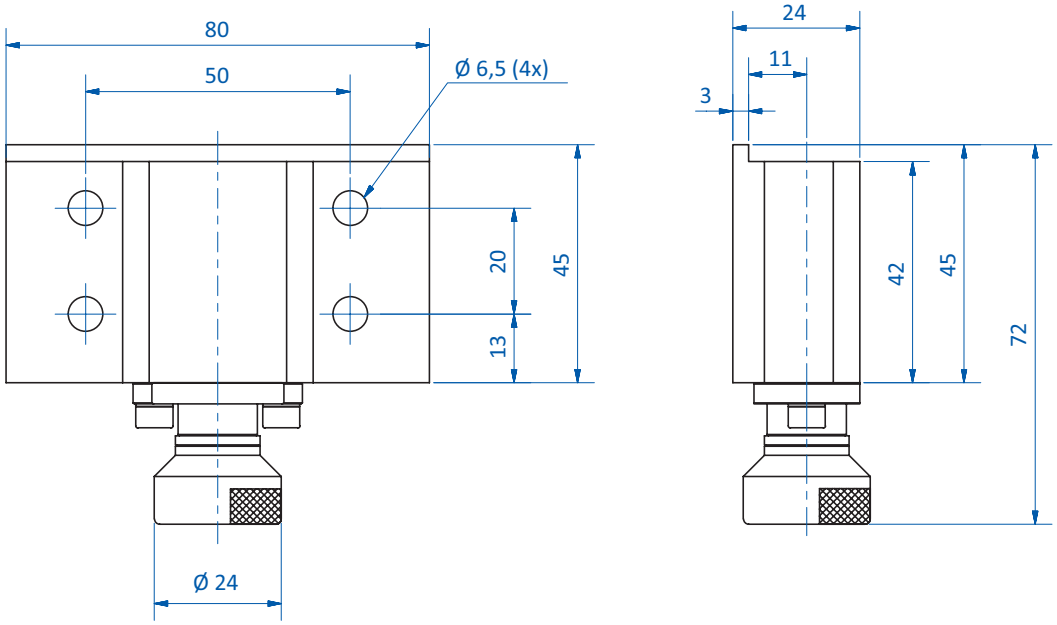

info@hidrafluid.es
976 24 32 10

Quick-change systems rectangle, gripper side

COMPATIBLE WITH STAR SYSTEMS

Product notes

> Manual interface between robot and gripper system
> Minimized downtime due to fast gripper change
> Robot side not included in scope of delivery

Technical data

Item no.	Lifting force [N]	Weight [g]	Suitable robot side
GR05.122	150	171	GR05.121 (p.39)

Dimensions

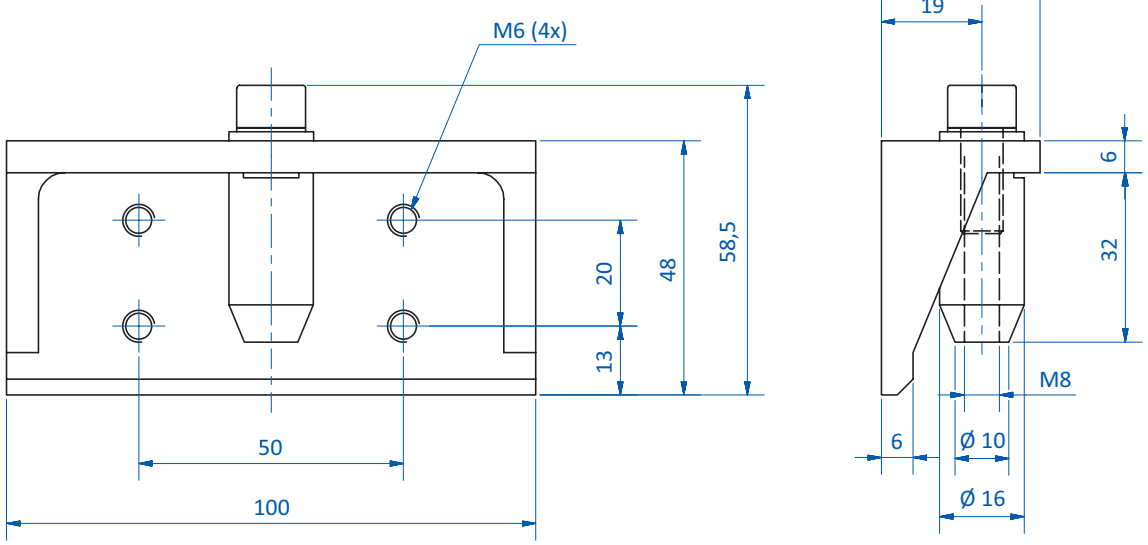

FIPA challenge accepted

info@hidrafluid.es
976 24 32 10

Dimensions for quick-change system robot side incl. gripper side

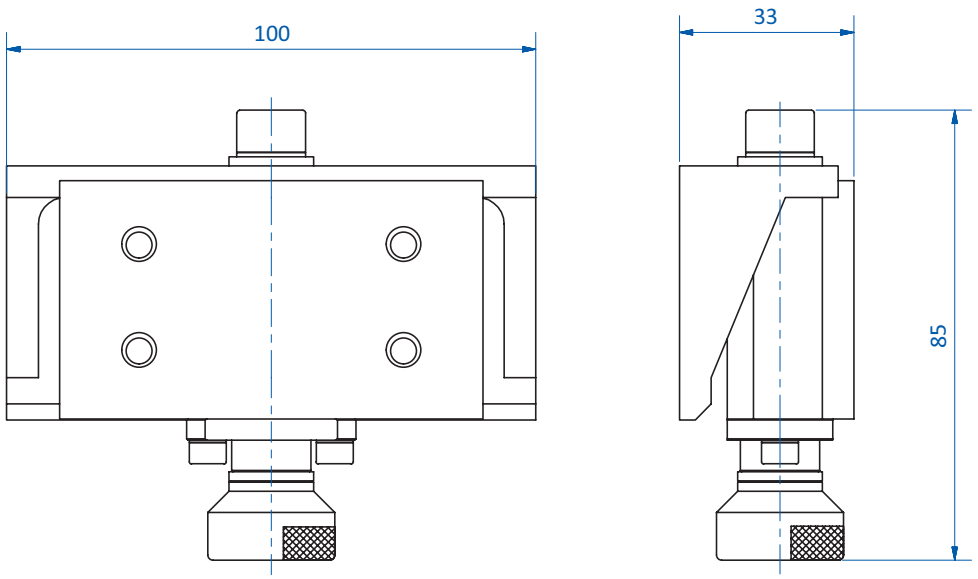

info@hidrafluid.es
976 24 32 10

Automatic quick-change systems

Robot side: ASR60-A

Gripper side: ASR48-B

Product notes

> Fast exchange of EOAT on robots via automatic compressed air disconnection, minimizes set-up time
> Secure locking system with guide pins compensates positional deviations during coupling
> Electronic connector for signal transmitting see accessories

Technical data

Item no.	ASR48-A	ASR48-B	ASR60-A	ASR60-B
Lifting force [N]	50	50	200	200
Number of pneumatic connections	8xM5	6xM5	4xM5	4xM5
Working pressure [bar (psi)]	0 - 10 (0 - 145)	0 - 10 (0 - 145)	0 - 10 (0 - 145)	0 - 10 (0 - 145)
Max. torque [Nm]	40	40	150	150
Max. bending moment [Nm]	40	40	158	158
Repeat accuracy [mm]	< 0.01	< 0.01	< 0.01	< 0.01
Operating pressure [bar (psi)]	6 - 10 (87 - 145)	6 - 10 (87 - 145)	6 - 10 (87 - 145)	6 - 10 (87 - 145)
Operating temperature [°C (°F)]	10 - 60 (50 - 140)	10 - 60 (50 - 140)	10 - 60 (50 - 140)	10 - 60 (50 - 140)
Weight [g]	200	50	400	110
Suitable plug connectors	ASR48-A-ME (p.45)	ASR48-B-ME (p.45)	ASR60-A-ME (p.45)	ASR60-B-ME (p.45)

Application example

info@hidrafluid.es
976 24 32 10

Dimensions

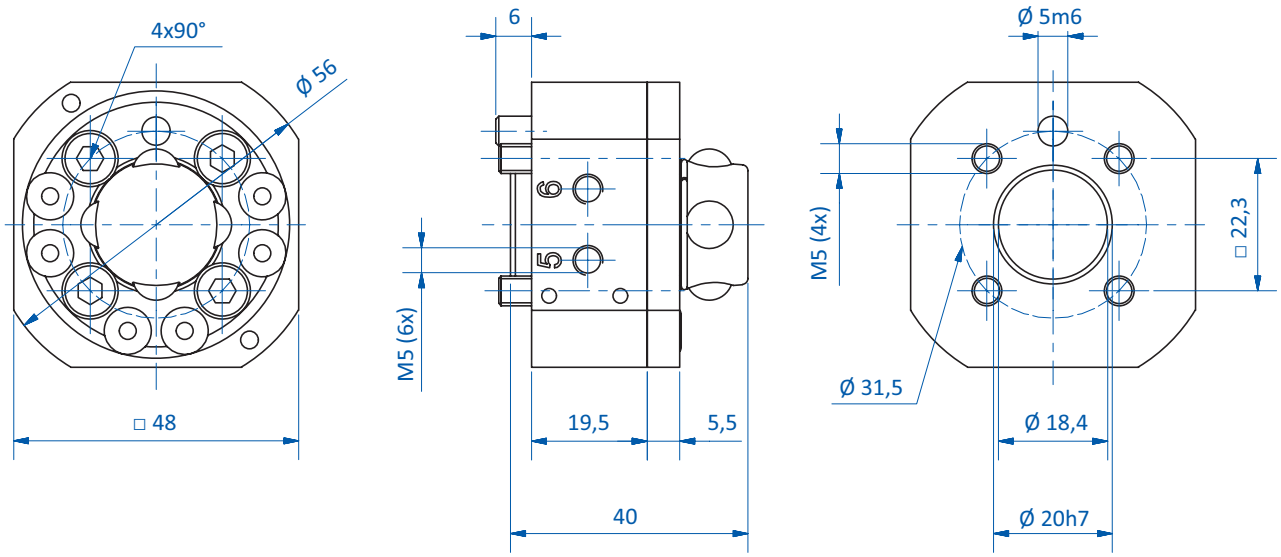

ASR48-A

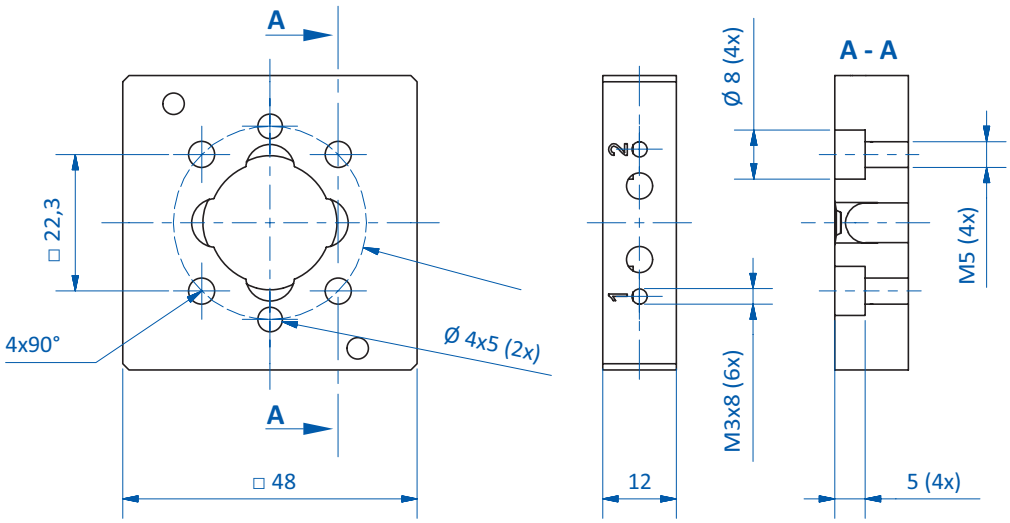

ASR48-B

Continued on the next page

info@hidrafluid.es
976 24 32 10

Dimensions

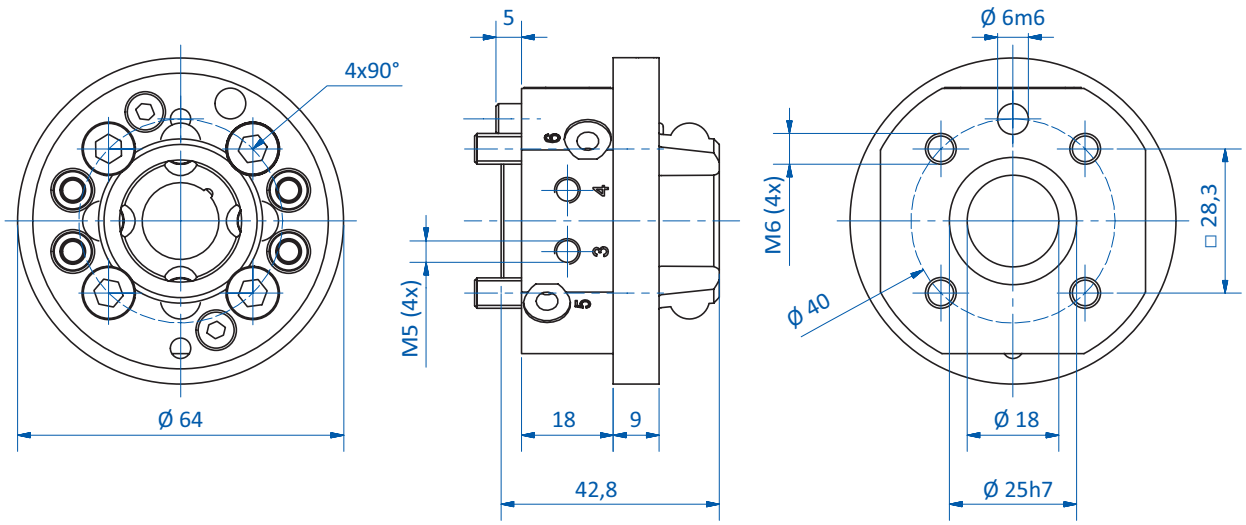

ASR60-A

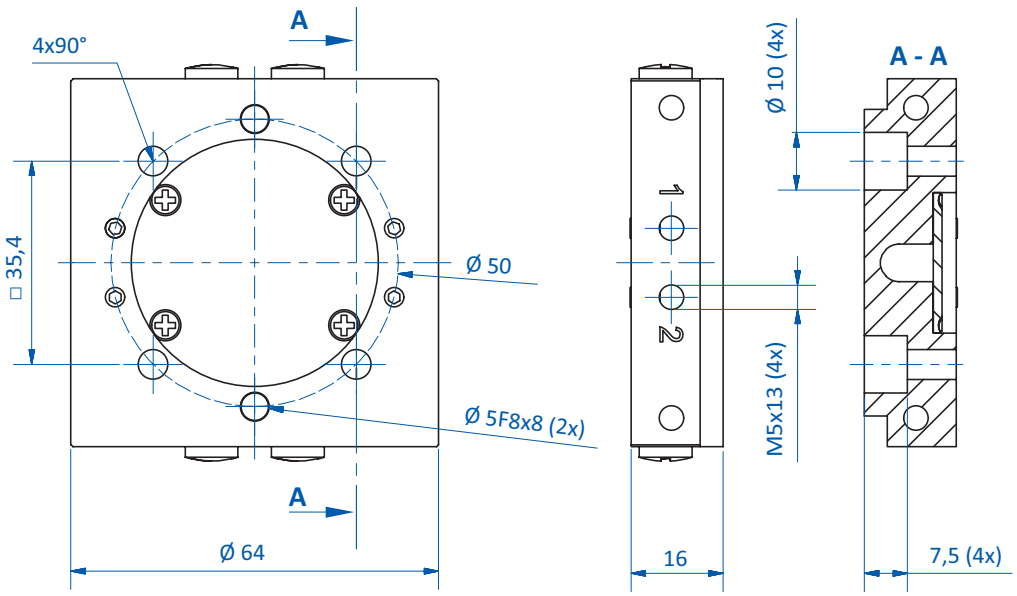

ASR60-B

FIPA challenge accepted
info@hidrafluid.es
976 24 32 10

Electronic connectors for automatic quick-changers

Display with quick-change system – robot side

Display with quick-change system – gripper side

Product notes

> Electronic modules for transmitting up to eight signals
> Automatic electrical connection via spring loaded pins

Technical data

Item no.	Max. operating voltage [V]	Number of electrical channels	Max. current consumption [A]	Connection	Operating temperature [°C (°F)]	Weight [g]
ASR48-A-ME	60	8	2	M12	10 - 60 (50 - 140)	50
ASR48-B-ME	60	8	2	M12	10 - 60 (50 - 140)	20
ASR60-A-ME	60	8	2	M12	10 - 60 (50 - 140)	50
ASR60-B-ME	60	8	2	M12	10 - 60 (50 - 140)	20

Dimensions

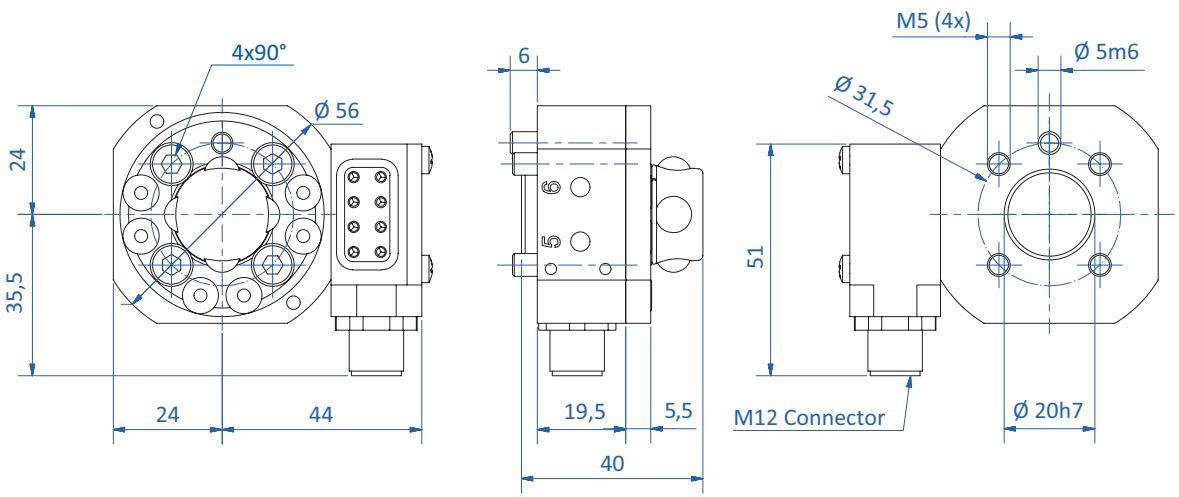

ASR48-A-ME

Continued on the next page

info@hidrafluid.es
976 24 32 10

Dimensions

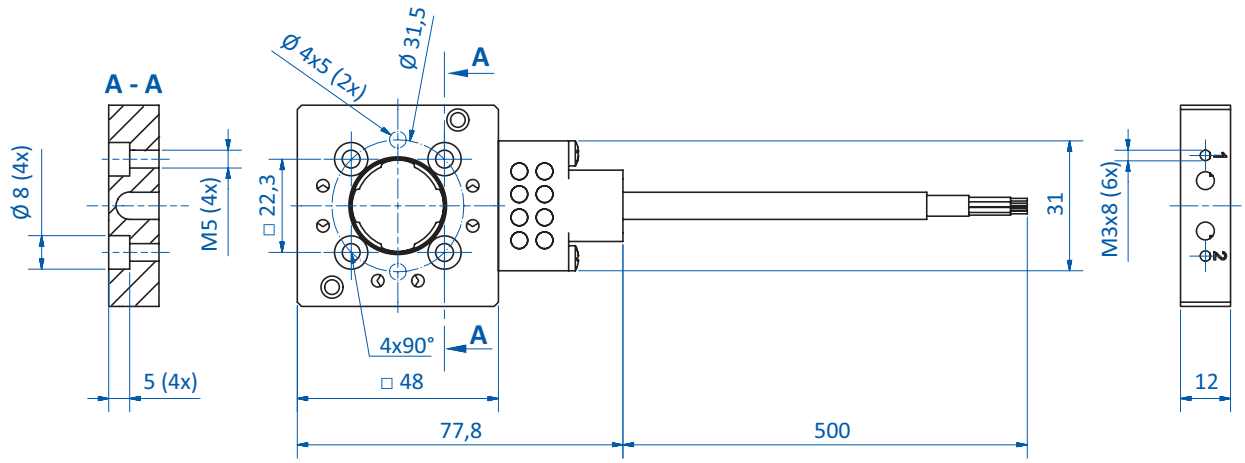

ASR48-B-ME

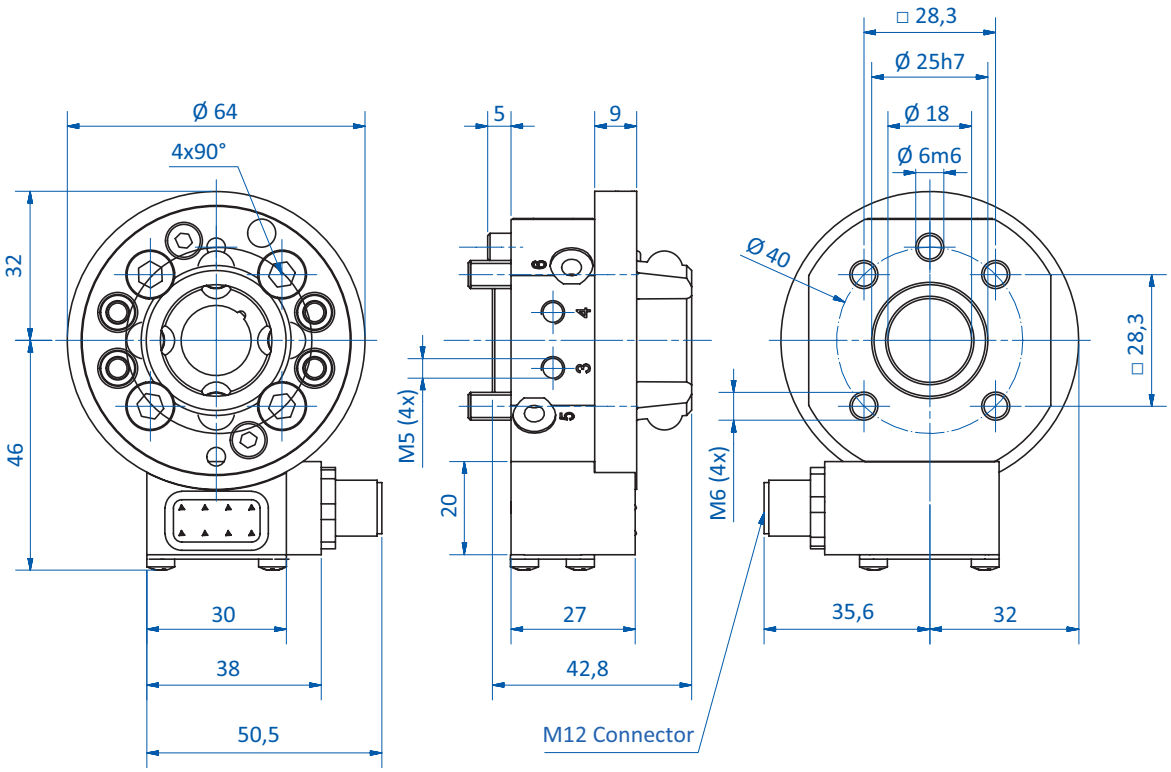

ASR60-A-ME

FIPA challenge accepted
info@hidrafluid.es
976 24 32 10

Dimensions

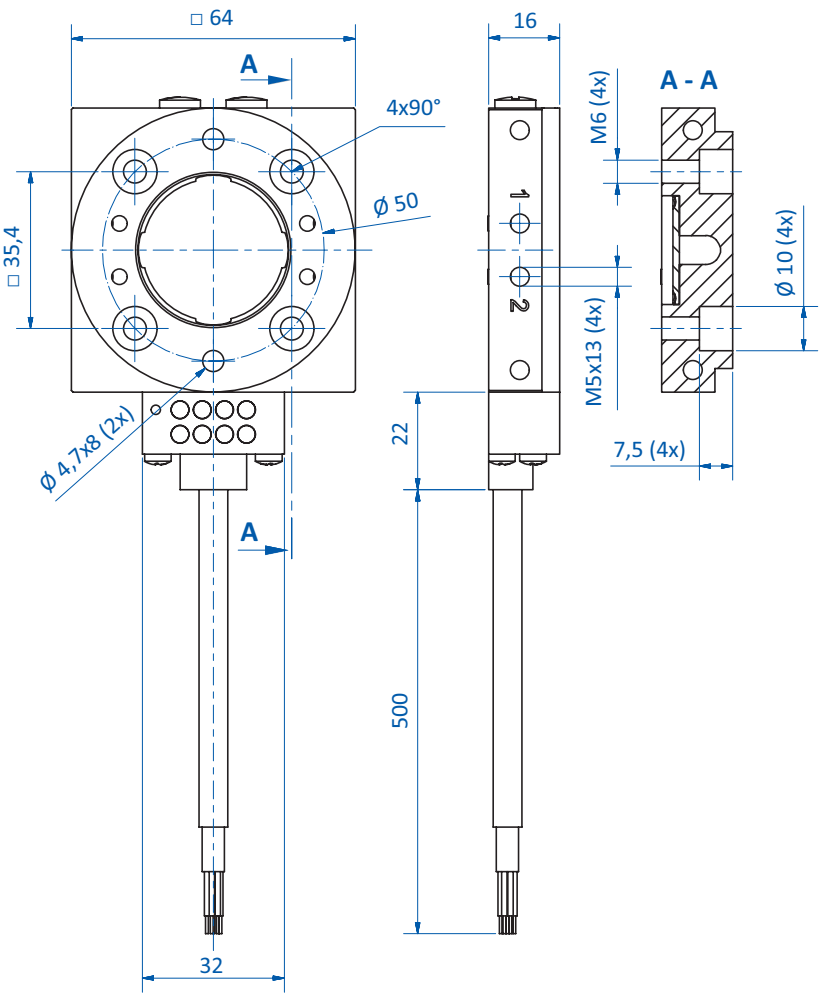

ASR60-B-ME

info@hidrafluid.es
976 24 32 10

Notes:

info@hidrafluid.es
976 24 32 10

Extrusion systems at a glance 50

Extrusions 52

Slot nuts 58

Connectors 64

Clamps for shafts 78

Mounting of vacuum cups 91

Air manifolds 96

Special elements 99

Accessories 102

info@hidrafluid.es
976 24 32 10

FIPA Extrusions

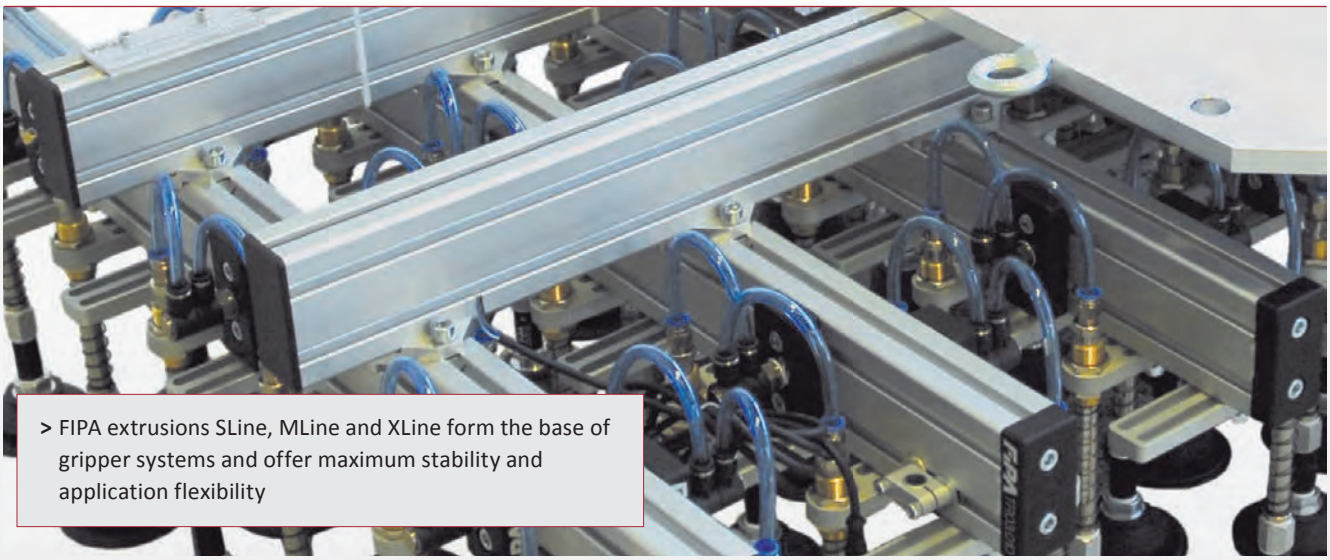

> FIPA extrusions SLine, MLine and XLine form the base of gripper systems and offer maximum stability and application flexibility

SLine and MLine

> Base for grippers with spans up to 1 m and loads up to approx. 5 kg
> Stable and lightweight

> See page 52

XLine

> Base for grippers with spans exceeding 1 m and loading capacity exceeding 5 kg
> Torsionally rigid for maximum stability even with high loads

> See page 55

Angle clamps

> Integration of gripper elements or vacuum cups
> Clamping diameters 10, 14, 20 and 30 mm
> Fits to extrusions from FIPA as well as third-party products

Profile connectors

> Angle variable, rigid connection of two extrusions

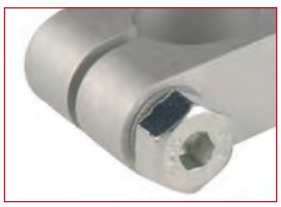

Clamping screws

> Internal and external hex bits for easy assembly even in restricted spaces

info@hidrafluid.es
976 24 32 10

FIPA Slot nuts

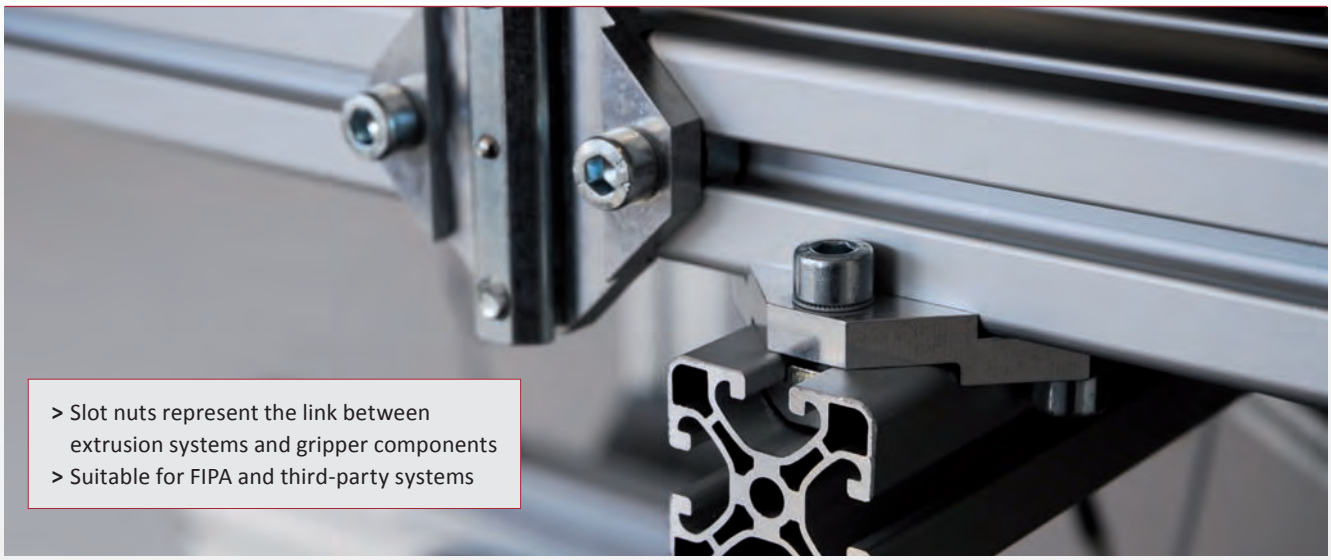

> Slot nuts represent the link between extrusion systems and gripper components
> Suitable for FIPA and third-party systems

Threaded slot nuts – universal

> For inserting into the extrusion groove
> Suitable for extrusion systems SLine, MLine and XLine as well as third-party products
> Existing components from other suppliers can still be used

> See page 58

Threaded slot nuts – swivel-in

> Slot nuts can be rotated in or out even after the assembly of the gripper system
> Quick and flexible extension and adaption of gripper systems without disassembly

> See page 62

Installation examples

> Using the same universal slot nut in FIPA and third-party extrusions
> Example with third-party extrusions 25 x 25 mm

> Example with FIPA SLine 20 x 20 mm

info@hidrafluid.es
976 24 32 10

SLine extrusions

Product notes

> Lightweight and rigid
> Material: AlMgSi 0.5 F25
> Special lengths over 2,000 mm on request

Technical data

Item no.	Length [mm]	Weight [kg/m]	Cross-section area [cm²]	Moment of plane area axial Ix [cm⁴]	Moment of plane area axial Iy [cm⁴]	Moment of resistance axial Wx [cm³]	Moment of resistance axial Wy [cm³]	Suitable end caps
GR01.001.2000	1,960	0.35	1.28	0.12	0.53	0.22	0.53	GR01.010 (p.57)
GR01.002.2000	1,960	0.63	2.34	0.24	3.59	0.45	1.8	GR01.011 (p.57)
GR01.003.2000	1,960	0.48	1.8	0.74	0.74	0.74	0.74	GR01.012 (p.57)
GR01.004.2000	1,960	0.87	3.22	1.39	5.16	1.39	2.53	GR01.013 (p.57)
GR01.006.2000	1,960	1.67	6.06	2.68	35.8	2.68	8.95	GR01.015 (p.57)
GR01.007.2000	1,960	1.33	4.94	9.16	9.16	4.53	4.53	GR01.016 (p.57)

Dimensions

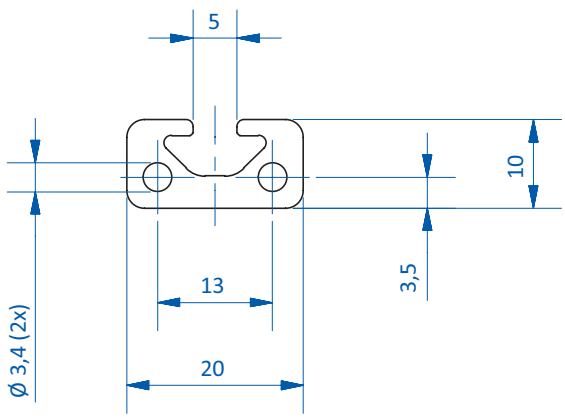

GR01.001.2000

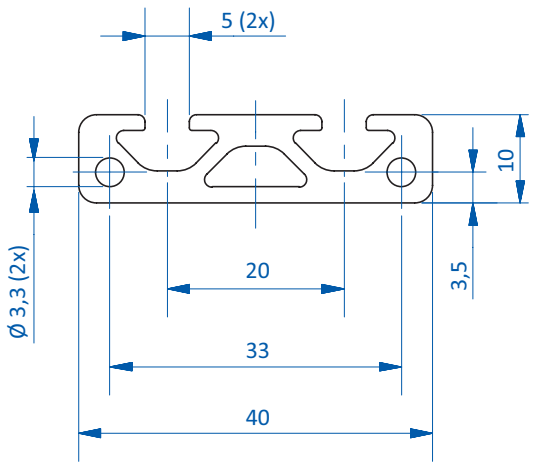

GR01.002.2000

FIPA challenge accepted
info@hidrafluid.es
976 24 32 10

Dimensions

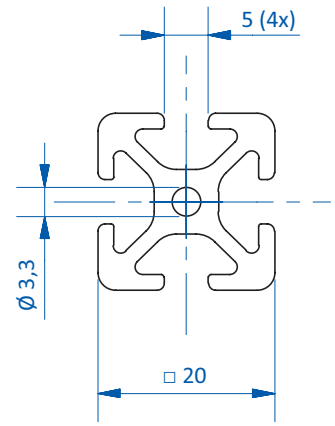

GR01.003.2000

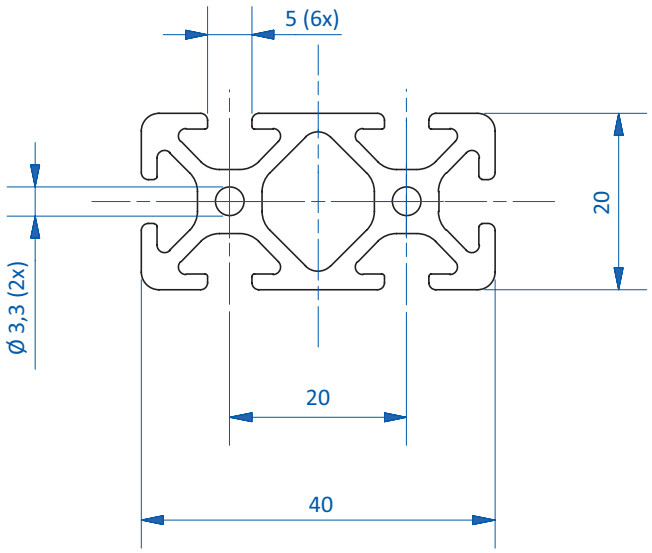

GR01.004.2000

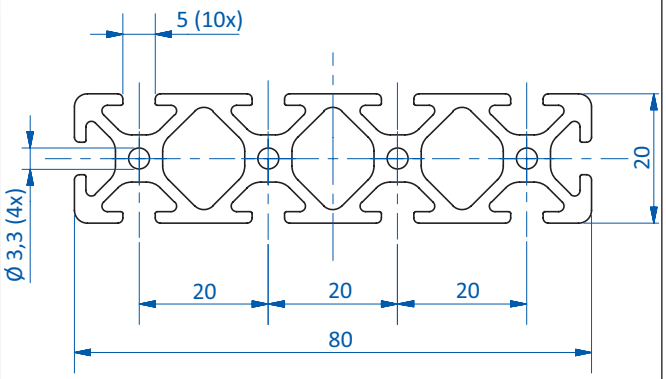

GR01.006.2000

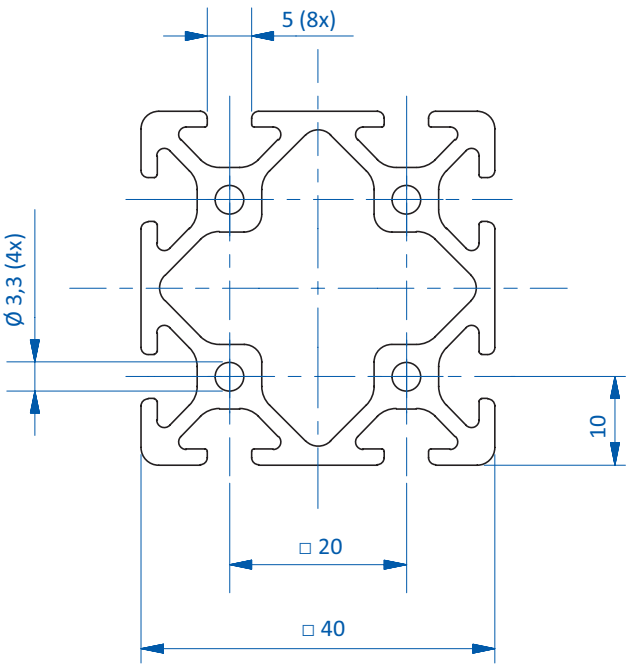

GR01.007.2000

info@hidrafluid.es
976 24 32 10

MLine extrusions

Product notes

> Lightweight and rigid
> Material: AlMgSi 0.5 F25
> Special lengths over 2,000 mm on request

Technical data

Item no.	Length [mm]	Weight [kg/m]	Cross-section area [cm²]	Moment of plane area axial Ix [cm⁴]	Moment of plane area axial Iy [cm⁴]	Moment of resistance axial Wx [cm³]	Moment of resistance axial Wy [cm³]	Suitable end caps
GR01.008.2000	1,960	0.61	2.48	1.58	1.58	1.26	1.26	GR01.017 (p.57)
GR01.009.2000	1,960	1.04	4.27	10.89	2.85	4.36	2.28	GR01.018 (p.57)

Dimensions

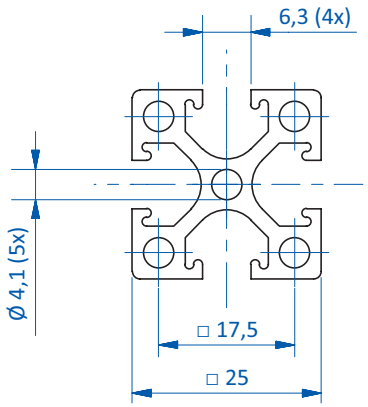

GR01.008.2000

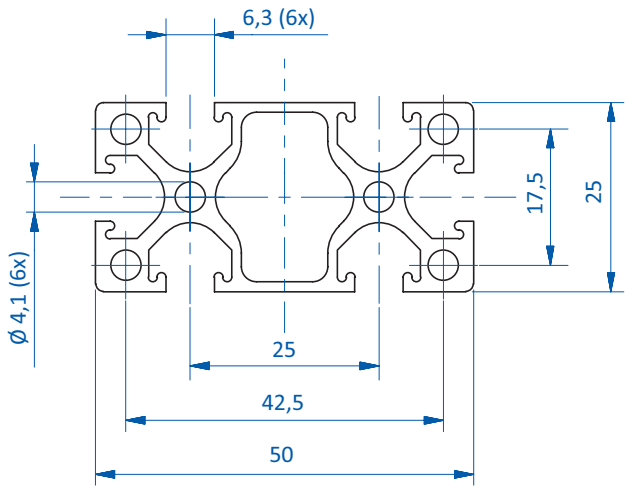

GR01.009.2000

FIPA challenge accepted
info@hidrafluid.es
976 24 32 10

Product notes

> High rigidity
> Material: AlMgSi 0.5 F25
> Special lengths over 2,000 mm on request

Technical data

Item no.	Length [mm]	Weight [kg/m]	Cross-section area [cm²]	Moment of plane area axial Ix [cm⁴]	Moment of plane area axial Iy [cm⁴]	Moment of resistance axial Wx [cm³]	Moment of resistance axial Wy [cm³]	Suitable end caps
GR-XL01.003.2000	1,960	1.36	5.04	7.34	7.34	3.67	3.67	GR-XL01.012 (p.57)
GR-XL01.004.2000	1,960	2.37	8.73	14.7	57.7	7.37	14.4	GR-XL01.013 (p.57)
GR-XL01.005.2000	1,960	5.19	19.2	131	131	32.8	32.8	--

Dimensions

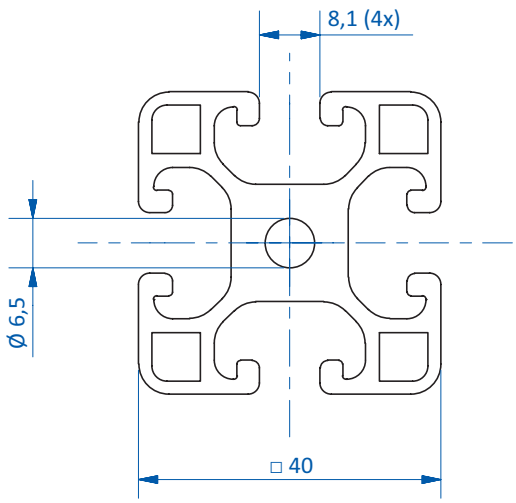

GR-XL01.003.2000

Continued on the next page

info@hidrafluid.es
976 24 32 10

Dimensions

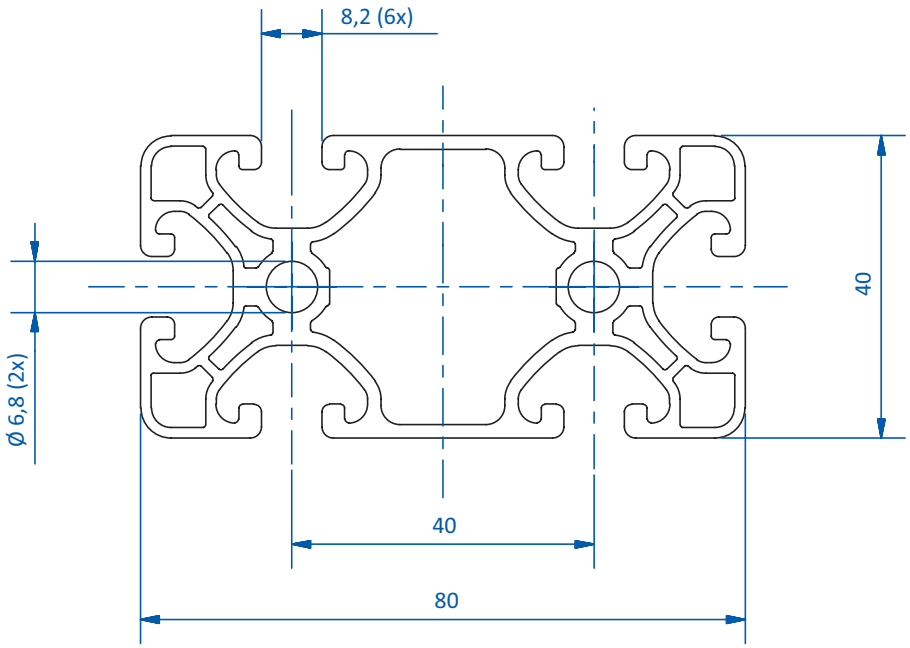

GR-XL01.004.2000

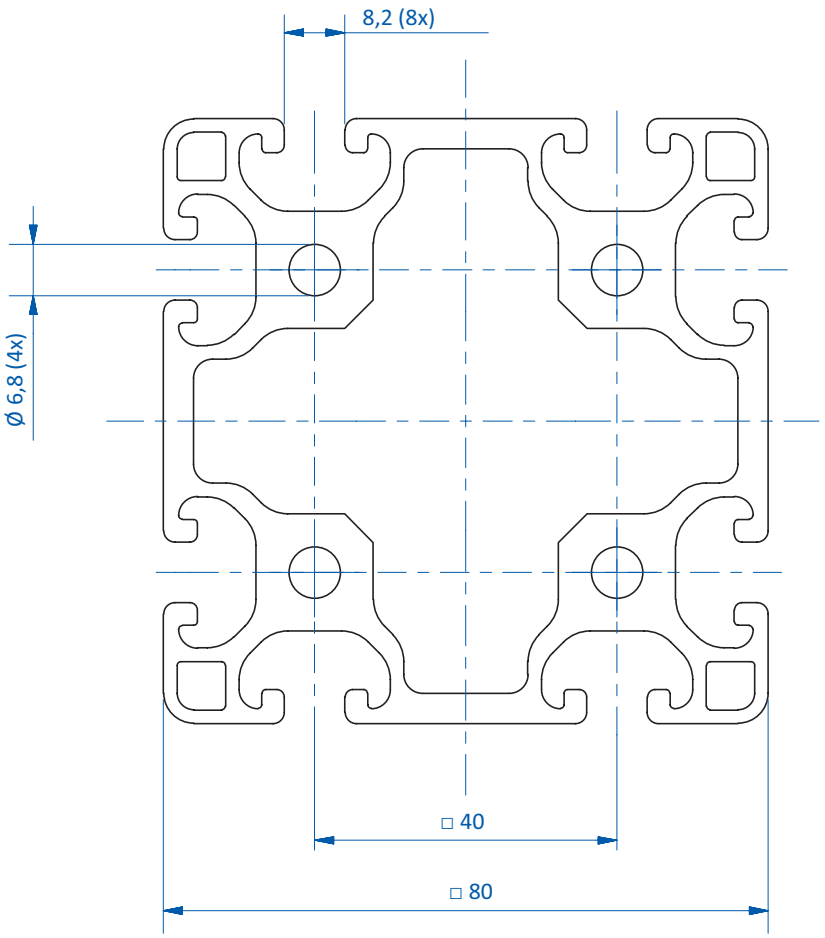

GR-XL01.005.2000

info@hidrafluid.es
976 24 32 10

End caps

Product notes

> For installation at the end of extrusion, reducing the risk of injury
> Material: PA6 black

Technical data

Item no.	Suitable for extrusion system
GR01.010	SLine
GR01.011	SLine
GR01.012	SLine
GR01.013	SLine
GR01.015	SLine
GR01.016	SLine
GR01.017	MLine
GR01.018	MLine
GR-XL01.012	XLine
GR-XL01.013	XLine

Dimensions

A [mm]	B [mm]	C [mm]
10	20	3
10	40	3
20	20	3
20	40	3
20	80	3
40	40	3
25	25	3
25	50	3
40	40	4
40	80	4

Application examples

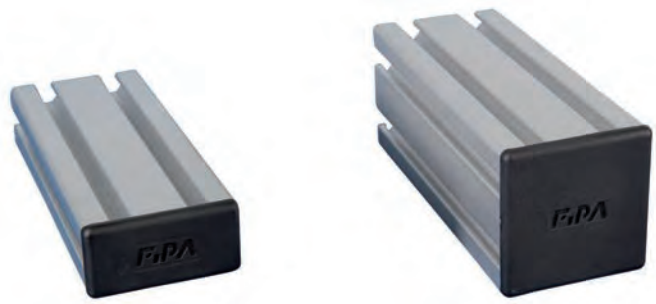

Dimensions

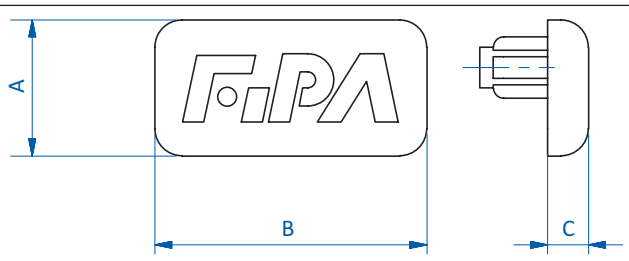

info@hidrafluid.es
976 24 32 10

Threaded slot nuts – universal

Product notes

> Galvanized steel slot nuts
> Ball catch prevents slipping of slot nut during installation
> Compatible with many third-party extrusions

Technical data

Item no.	Suitable for extrusion system	With ball catch	Weight [g]
GR01.088A	SLine / MLine	--	2
GR01.089A	SLine / MLine	--	3
GR01.090A	SLine / MLine	--	6
GR01.091A	SLine / MLine	Yes	6
GR01.092A	SLine / MLine	Yes	8
GR01.093A	SLine / MLine	Yes	9
GR01.094A	SLine / MLine	Yes	12
GR01.095A	SLine / MLine	Yes	13
GR01.096A	SLine / MLine	Yes	20
GR01.097A	SLine / MLine	--	2
GR01.098A	SLine / MLine	--	5
GR01.101A	SLine / MLine	Yes	12
GR01.102A	SLine / MLine	Yes	20
GR-XL01.100	XLine	Yes	17
GR-XL01.101	XLine	Yes	21
GR-XL01.102	XLine	Yes	35
GR-XL01.103	XLine	Yes	57
GR-XL01.104	XLine	Yes	94
GR-XL01.106	XLine	Yes	18

Dimensions

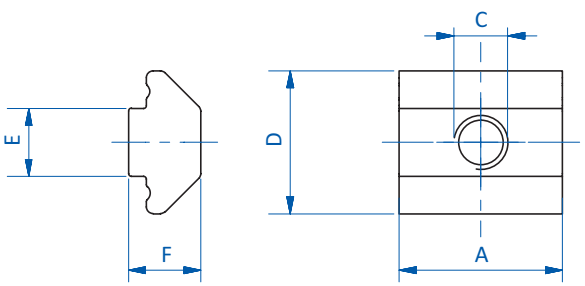

GR01.088A | GR01.089A | GR01.097A | GR01.098A | GR-XL01.100 | GR-XL01.106

info@hidrafluid.es
976 24 32 10

Dimensions

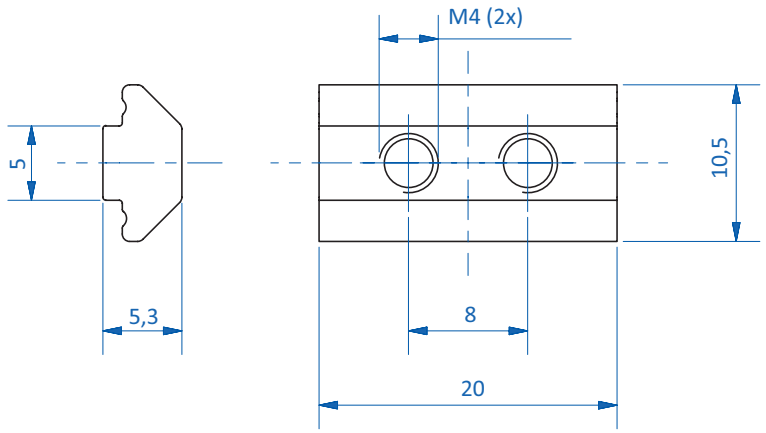

GR01.090A

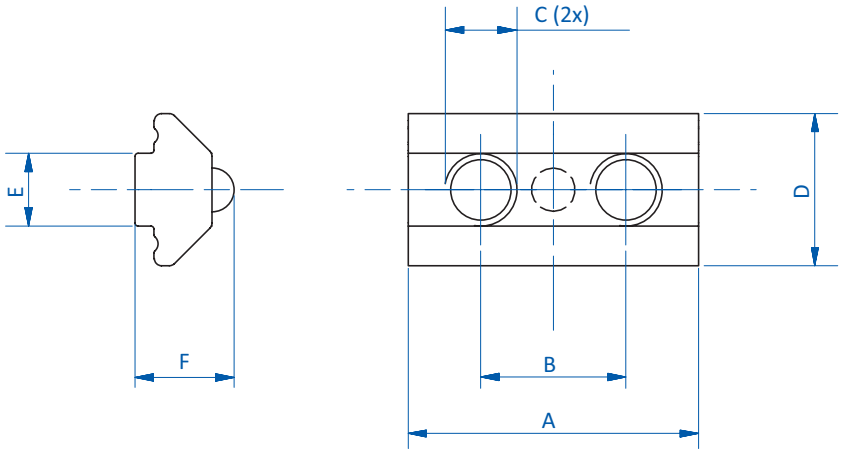

GR01.091A | GR01.092A | GR01.093A | GR01.094A | GR01.095A | GR01.096A | GR01.101A | GR01.102A | GR-XL01.101 | GR-XL01.102 | GR-XL01.103 | GR-XL01.104

Item no.	C	A [mm]	B [mm]	D [mm]	E [mm]	F [mm]
GR01.088A	M3	12	--	10.5	4.5	5.3
GR01.089A	M4	12	--	10.5	4.5	5.3
GR01.090A	M4	20	8	10.5	5	6.8
GR01.091A	M5	20	10	10.5	5	6.8
GR01.092A	M5	25	12	10.5	5	6.8
GR01.093A	M5	30	20	10.5	5	6.8
GR01.094A	M5	35	25	10.5	5	6.8
GR01.095A	M5	40	30	10.5	5	6.8
GR01.096A	M5	60	50	10.5	5	6.8
GR01.097A	M5	12	--	10.5	5	6.8
GR01.098A	M5	20	--	10.5	5	6.8
GR01.101A	M5	45	35	10.5	5	6.8
GR01.102A	M5	70	60	10.5	5	6.8
GR-XL01.100	M8	22	--	17	8	12.1
GR-XL01.101	M8	30	15	17	8	12.1
GR-XL01.102	M8	45	30	17	8	12.1
GR-XL01.103	M8	70	55	17	8	12.1
GR-XL01.104	M8	110	95	17	8	12.1
GR-XL01.106	M6	22	--	17	8	12.1

info@hidrafluid.es
976 24 32 10

Threaded slot nuts – universal

Product notes

> Galvanized steel slot nuts
> Ball catch prevents slipping of slot nut during installation
> Compatible with many third-party extrusions

Technical data

Item no.	Suitable for extrusion system	With ball catch	Weight [g]
GR01.103	MLine	Yes	4
GR01.104	MLine	--	7
GR01.105	MLine	--	16

Dimensions

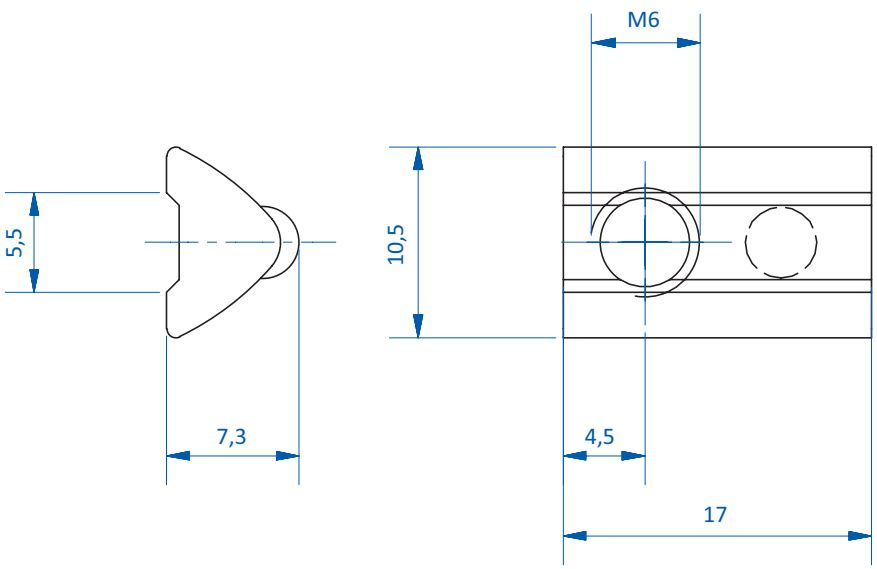

GR01.103

FIPA challenge accepted
info@hidrafluid.es
976 24 32 10

Dimensions

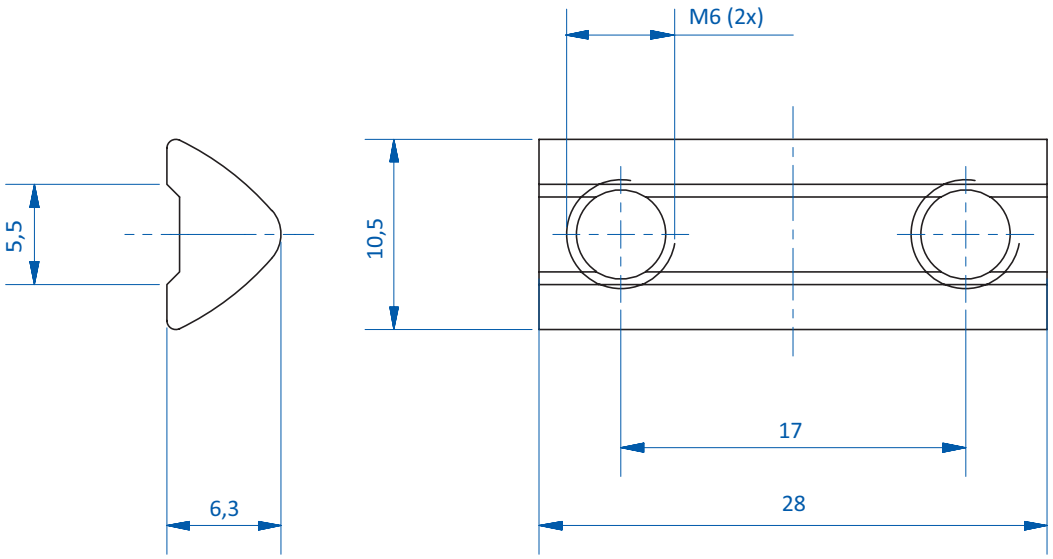

GR01.104

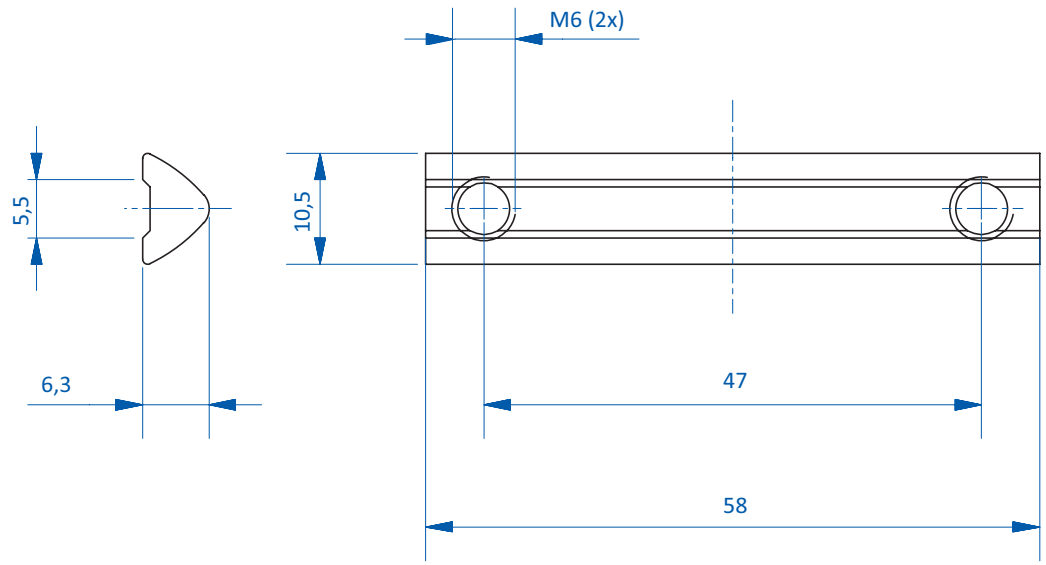

GR01.105

info@hidrafluid.es
976 24 32 10

Threaded slot nuts – swivel-in

Product notes

> Galvanized steel slot nuts
> Enables subsequent extension of gripper systems without disassembly
> Ball catch prevents slipping of slot nut during installation

Technical data

Item no.	Suitable for extrusion system	With ball catch	Weight [g]
GR01.069	SLine	Yes	2
GR01.070	SLine	Yes	2
GR01.071	SLine	Yes	2
GR01.080	SLine	--	2
GR01.081	SLine	Yes	3
GR01.082	SLine	Yes	4
GR01.083	SLine	Yes	5
GR01.084	SLine	Yes	6
GR01.085	SLine	Yes	7
GR01.086	SLine	Yes	11
GR-XL01.105	XLine	Yes	8

Dimensions

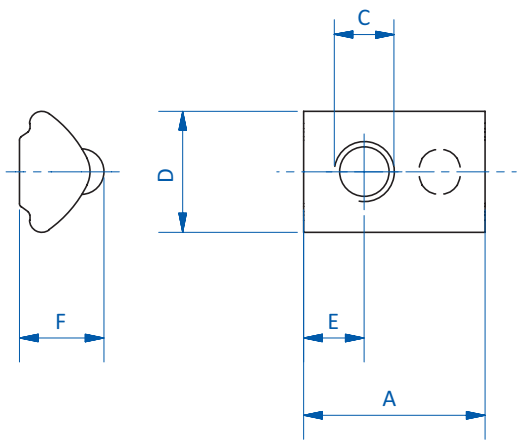

GR01.069 | GR01.070 | GR01.071 | GR-XL01.105

info@hidrafluid.es
976 24 32 10

Dimensions

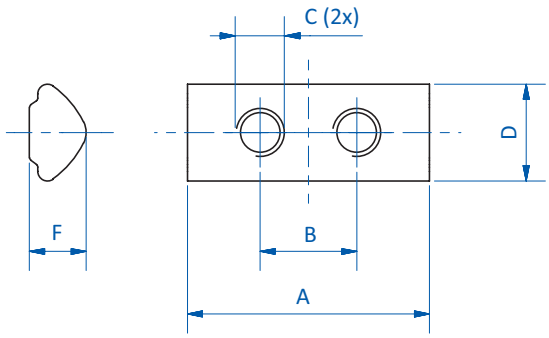

GR01.080

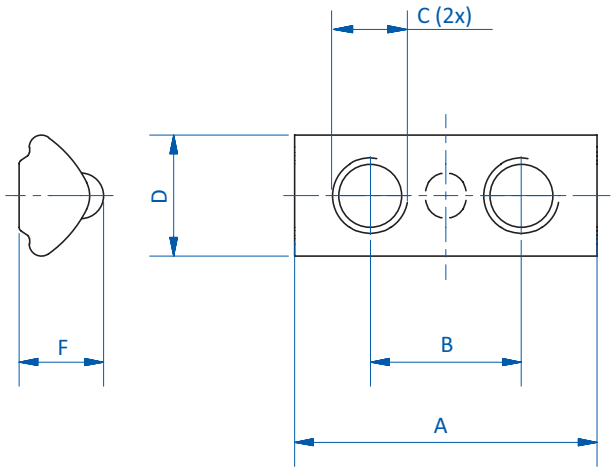

GR01.081 | GR01.082 | GR01.083 | GR01.084 | GR01.085 | GR01.086

Item no.	C	A [mm]	B [mm]	D [mm]	F [mm]	E [mm]
GR01.069	M3	12	--	8	5.6	3
GR01.070	M4	12	--	8	5.6	4
GR01.071	M5	12	--	8	5.6	4
GR01.080	M4	20	8	8	4.7	--
GR01.081	M5	20	10	8	5.6	--
GR01.082	M5	25	12	8	5.6	--
GR01.083	M5	30	20	8	5.6	--
GR01.084	M5	35	25	8	5.6	--
GR01.085	M5	40	30	8	5.6	--
GR01.086	M5	60	50	8	5.6	--
GR-XL01.105	M5	22	--	12.9	9.1	6.3

info@hidrafluid.es
976 24 32 10

Cross joint connectors

Product notes

> Elements for 90° connection of two extrusions
> Extrusions can be moved in four directions after screws are loosened

Technical data

Item no.	Suitable for extrusion system	Weight [g]
GR01.020A	SLine	48
GR01.021	SLine	73
GR01.022	SLine	107
GR01.026	MLine	55
GR01.027	MLine	90
GR01.150	MLine	101
GR-XL01.020	XLine	218
GR-XL01.021	XLine	380
GR-XL01.022	XLine	630

Dimensions

A [mm]	B [mm]	C [mm]	D [mm]	E [mm]	F [mm]	G [mm]
20	20	20	9	40	40	--
20	40	20	9	40	60	--
40	40	20	9	60	60	--
25	25	23	12	45	45	--
25	50	23	12	45	70	--
50	50	23	12	70	70	--
40	40	30	12	70	70	4
40	80	30	12	70	110	4
80	80	30	12	110	110	4

Dimensions

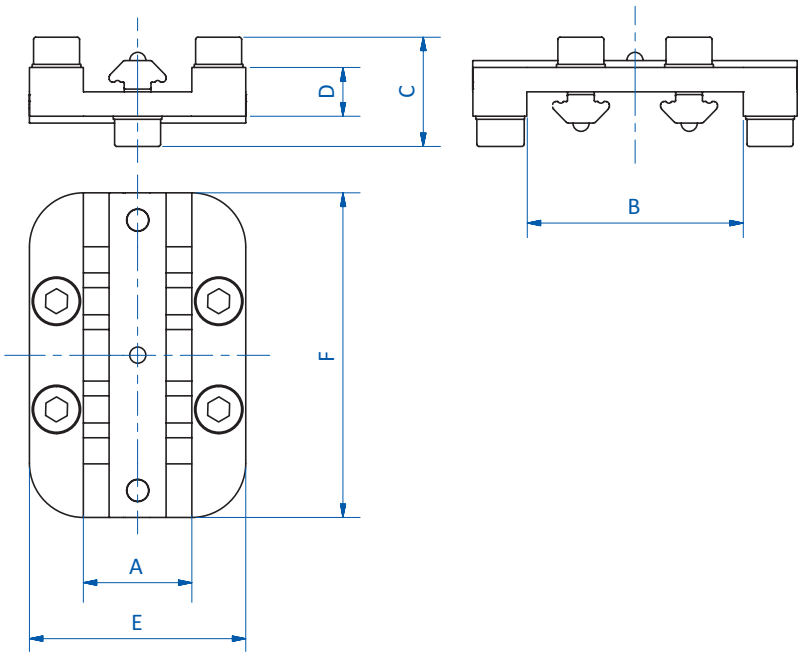

FIPA challenge accepted
info@hidrafluid.es
976 24 32 10

Cross joint connectors

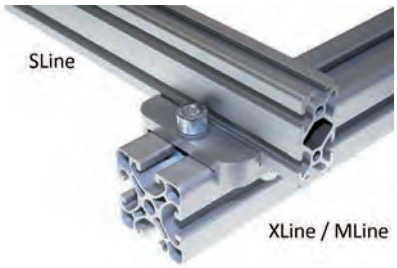

Product notes

> Elements for 90° connection of SLine with MLine or XLine extrusions

Technical data

Item no.	Suitable for extrusion system	Weight [g]
GR01.023	SLine / MLine	61
GR01.024	SLine / XLine	119
GR01.025	SLine / XLine	173

Dimensions

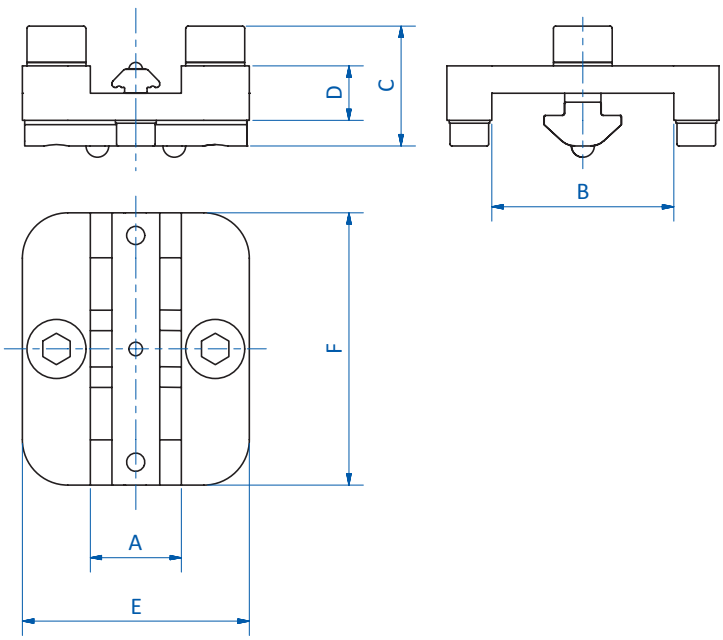

Item no.	A [mm]	B [mm]	C [mm]	D [mm]	E [mm]	F [mm]
GR01.023	20	25	23	12	40	45
GR01.024	20	40	27	12	50	60
GR01.025	40	40	27	12	70	60

info@hidrafluid.es
976 24 32 10

Profile connectors

Product notes

> Elements for 90° connection of two SLine extrusions
> Extrusions can be moved in four directions after screws are loosened

Technical data

Item no.	Suitable for extrusion system	Weight [g]
GR01.030	SLine	43
GR01.031	SLine	58
GR01.032	SLine	72
GR01.040	SLine	50
GR01.041	SLine	55
GR01.042	SLine	83

Dimensions

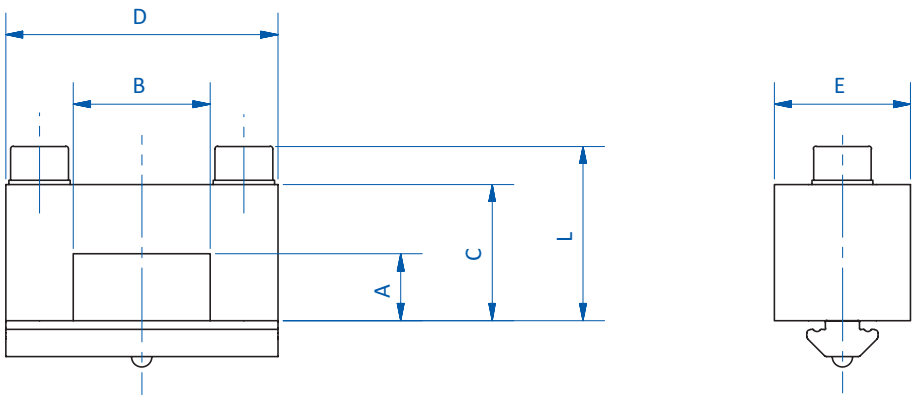

Item no.	A [mm]	B [mm]	C [mm]	D [mm]	E [mm]	L [mm]
GR01.030	10	20	20	40	20	25.5
GR01.031	10	40	19.5	60	20	25
GR01.032	20	40	29.5	60	20	35
GR01.040	20	10	29.5	30	20	35
GR01.041	20	20	29.5	40	20	35
GR01.042	40	20	49.5	40	20	55

FIPA challenge accepted
info@hidrafluid.es
976 24 32 10

Angle connectors 90° with cover

Product notes

> Elements for connection of two extrusions

Technical data

Item no.	Weight [g]	Suitable for extrusion system
GR01.050	20	SLine / MLine
GR01.051	60	SLine / MLine
GR01.052	150	XLine
GR01.053	270	XLine

Dimensions

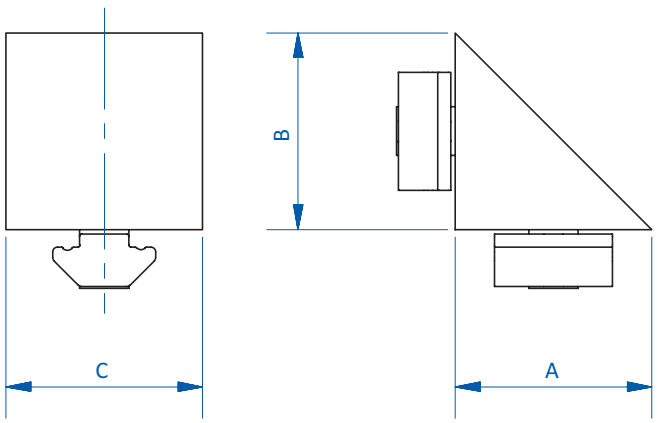

Item no.	**A** [mm]	**B** [mm]	**C** [mm]
GR01.050	20	20	20
GR01.051	41.5	41.5	20
GR01.052	40	40	40
GR01.053	77.5	77.5	38.5

info@hidrafluid.es
976 24 32 10

Joining plates 90°

Product notes

> Joining plate for 90° connection of two profiles

Technical data

Item no.	Suitable for extrusion system	Weight [g]
GR01.060	SLine / MLine	93
GR01.061	SLine / MLine	108

Dimensions

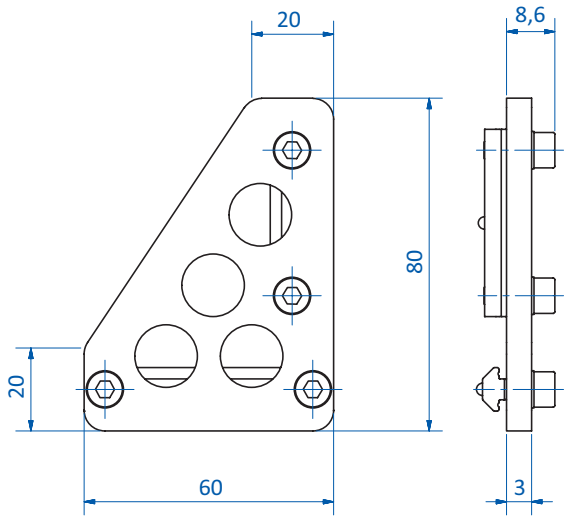

GR01.060

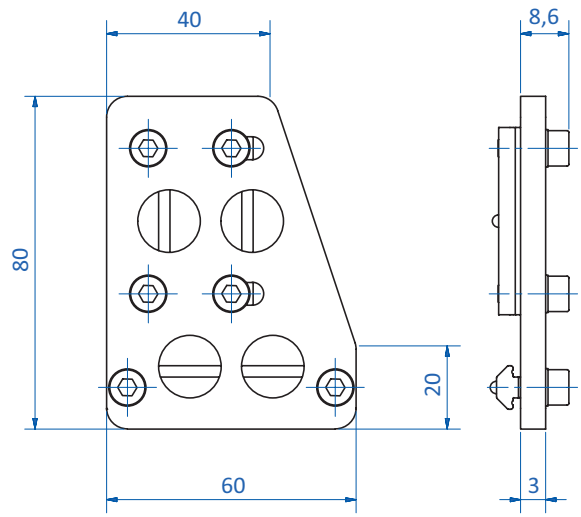

GR01.061

info@hidrafluid.es
976 24 32 10

Corner joint plates 90° to 130°

Product notes

> Joining plates for connection of two profiles with a defined angle

Technical data

Item no.	Suitable for extrusion system	Angle [°]	Weight [g]
GR01.063	SLine	90°, 100°, 110°, 120°, 130°	127
GR01.064	MLine	90°, 100°, 110°, 120°, 130°	131
GR-XL01.063	XLine	90°, 110°, 130°	284

Dimensions

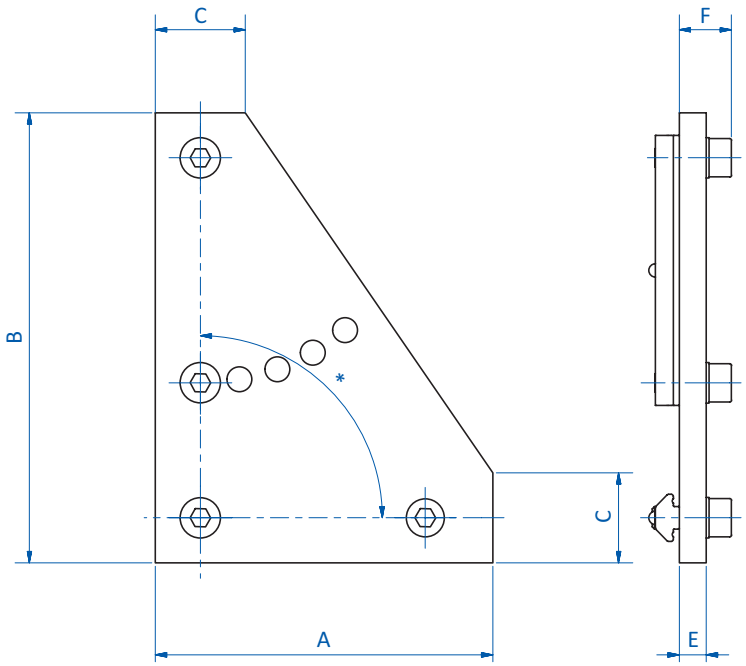

* = Angle

Item no.	A [mm]	B [mm]	C [mm]	E [mm]	F [mm]
GR01.063	75	100	20	3	8.6
GR01.064	75	100	25	3	8.6
GR-XL01.063	80	120	40	3	11.8

info@hidrafluid.es
976 24 32 10

Adjustable profile connectors 0° to 90°

GR01.062

Product notes

> Joining plates for connection of two profiles with adjustable angle

Technical data

Item no.	Suitable for extrusion system	Weight [g]
GR01.062	SLine / MLine	77
GR-XL01.062	XLine	225

Dimensions

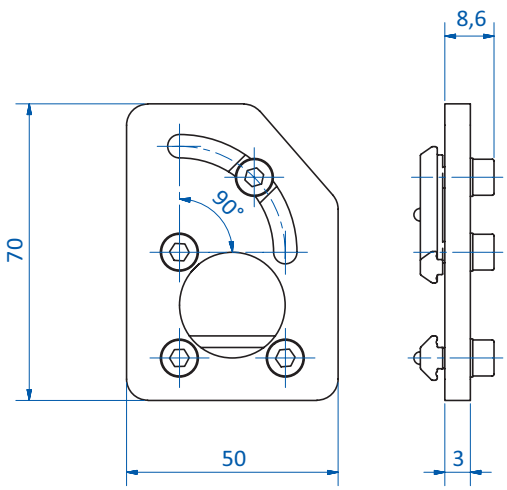

GR01.062

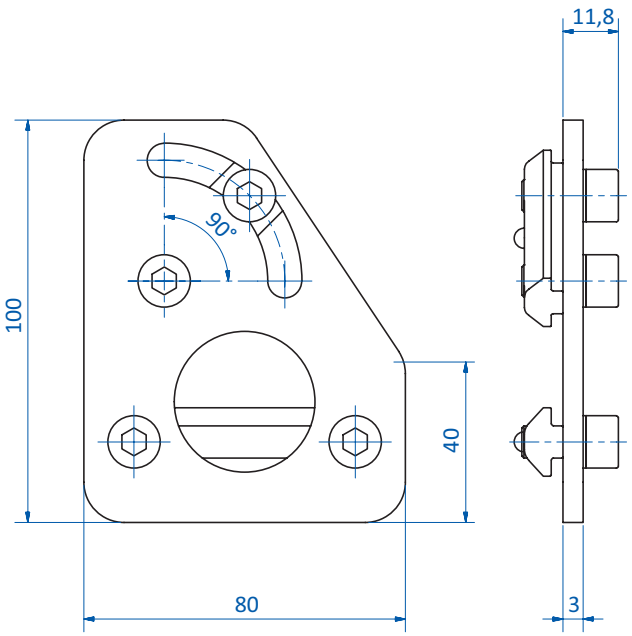

GR-XL01.062

info@hidrafluid.es
976 24 32 10

Profile connectors – rotatable

Product notes

> Variable angle mounting of two parallel profiles
> Rigid clamping through two opposing screws
> 2x slot nut GR01.093A, with 2x M5 thread for length-ways mounting
> 4x slot nut GR01.097A, with 2x M5 thread for horizontal mounting

Technical data

Item no.	Suitable for extrusion system	Weight [g]
GR01.100	SLine / MLine	78

Dimensions

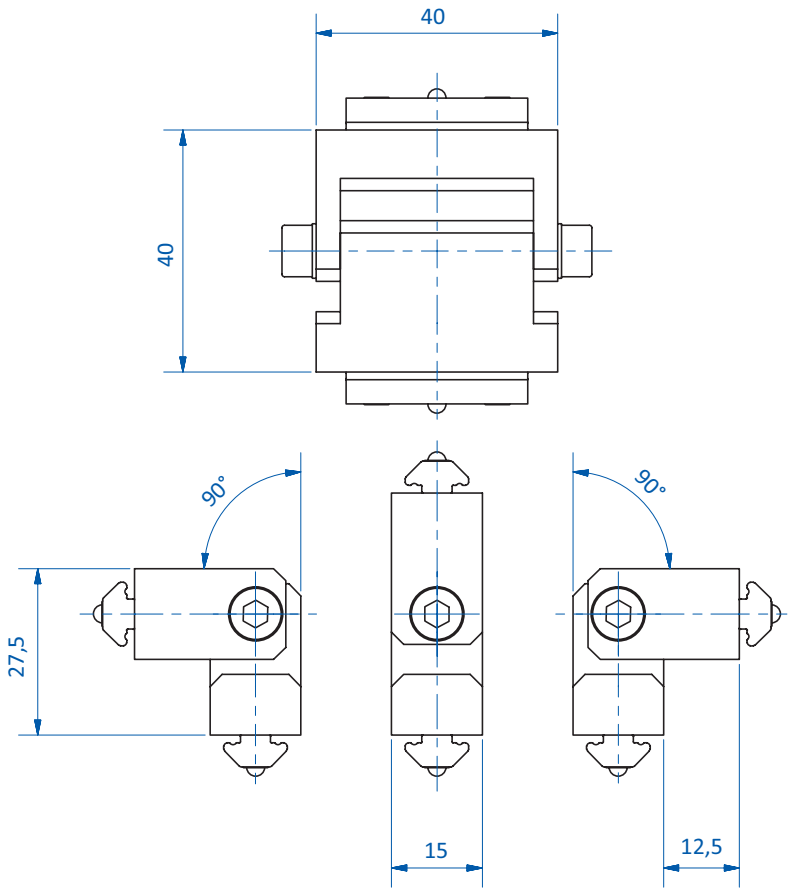

info@hidrafluid.es
976 24 32 10

Profile end connectors 90°

Product notes

> Rigid 90° connection between two extrusions
> No thread cutting required

Technical data

Item no.	Suitable for extrusion system	Weight [g]
GR01.120	SLine / MLine	92
GR01.121	SLine / MLine	90
GR01.122	SLine / MLine	96
GR01.123	SLine / MLine	100
GR-XL01.025	XLine	406
GR-XL01.026	XLine	396

Dimensions

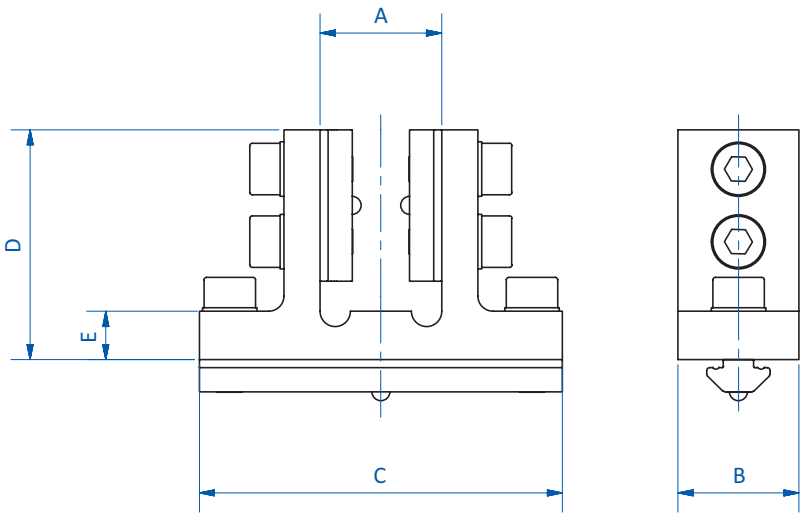

Item no.	A [mm]	B [mm]	C [mm]	D [mm]	E [mm]
GR01.120	20	20	60	38	8
GR01.121	40	20	80	38	8
GR01.122	25	25	60	37	7
GR01.123	50	25	90	37	7
GR-XL01.025	40	40	110	47	12
GR-XL01.026	80	40	150	47	12

FIPA challenge accepted
info@hidrafluid.es
976 24 32 10

Flat connectors – straight

Product notes

> For rigid end-to-end connection of two profiles

Technical data

Item no.	Suitable for extrusion system	Weight [g]
GR01.054	SLine / MLine	16
GR01.055	SLine / MLine	50
GR01.056	SLine / MLine	64
GR-XL01.028	XLine	260

Dimensions

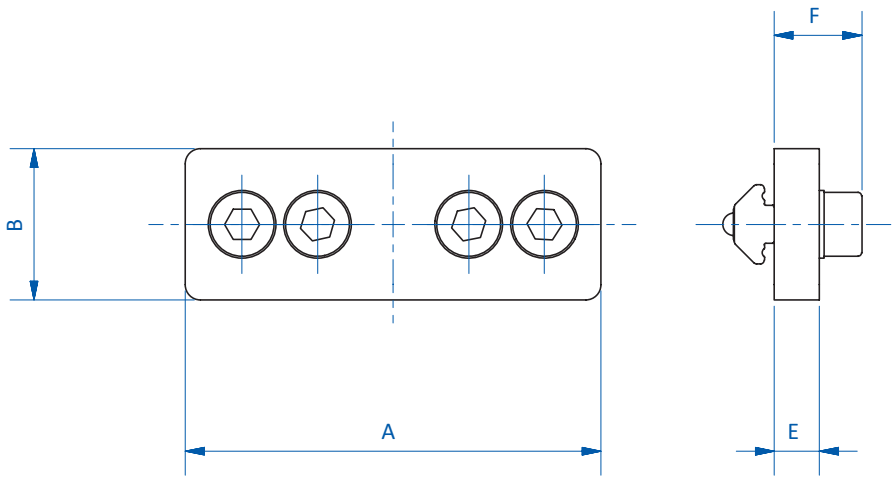

Item no.	A [mm]	B [mm]	E [mm]	F [mm]
GR01.054	55	20	3	9
GR01.055	75	20	3	9
GR01.056	100	20	3	9
GR-XL01.028	160	40	3	12

info@hidrafluid.es
976 24 32 10

Flat connectors – L-form

Product notes

> For rigid connection of two profiles at 90°

Technical data

Item no.	Suitable for extrusion system	Weight [g]
GR01.046	SLine / MLine	66
GR01.047	SLine / MLine	53
GR01.048	MLine	213
GR-XL01.029	XLine	260

Dimensions

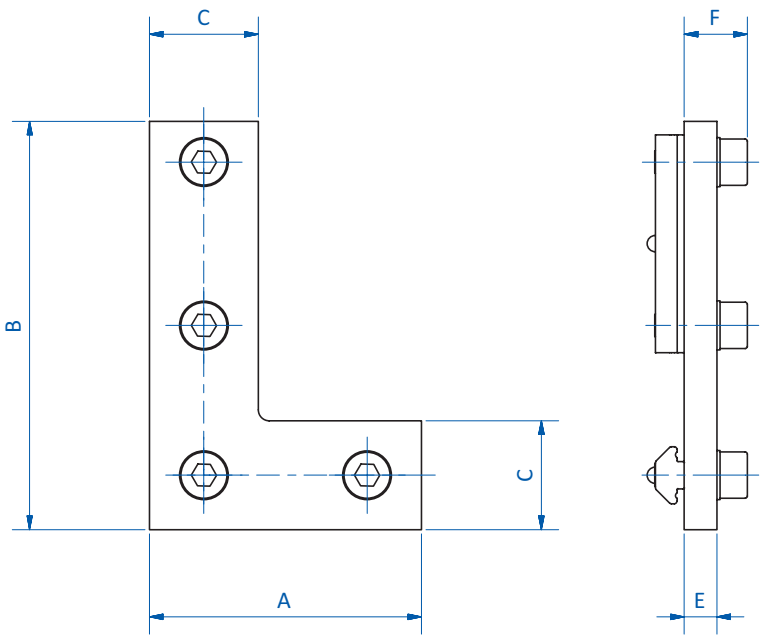

Item no.	A [mm]	B [mm]	C [mm]	E [mm]	F [mm]
GR01.046	50	75	20	3	9
GR01.047	50	50	20	3	9
GR01.048	80	120	50	3	9
GR-XL01.029	80	120	40	3	12

FIPA challenge accepted
info@hidrafluid.es
976 24 32 10

Flat connectors – T-form

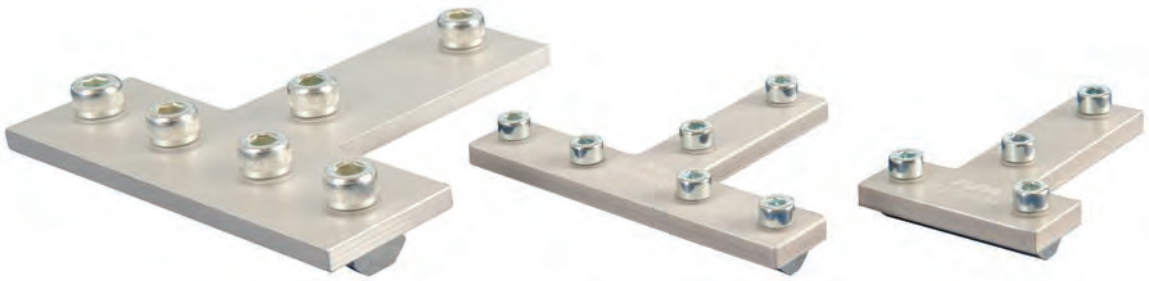

Product notes

> For rigid perpendicular connection of two profiles

Technical data

Item no.	Suitable for extrusion system	Weight [g]
GR01.035	SLine / MLine	95
GR01.036	SLine	123
GR01.037	MLine	268
GR-XL01.035	XLine	318

Dimensions

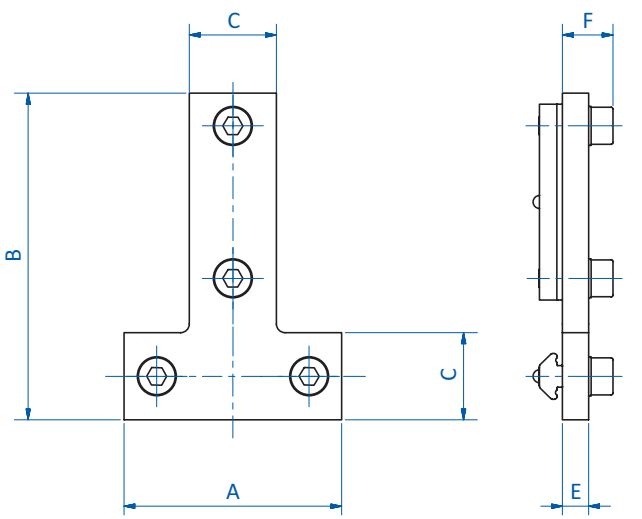

GR01.035 | GR-XL01.035

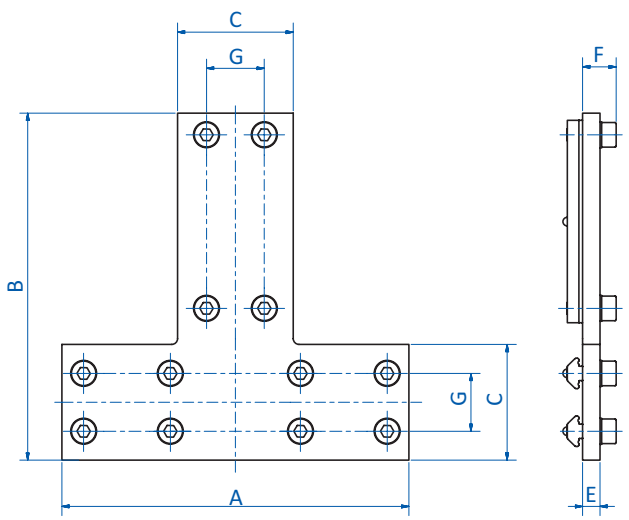

GR01.036 | GR01.037

Item no.	A [mm]	B [mm]	C [mm]	E [mm]	F [mm]	G [mm]
GR01.035	100	75	20	3	9	--
GR01.036	120	120	40	3	9	20
GR01.037	120	130	50	3	9	25
GR-XL01.035	120	120	40	3	12	--

info@hidrafluid.es
976 24 32 10

Flat connectors 45°

Product notes

> For rigid 45° connection of two profiles

Technical data

Item no.	Angle [°]	Suitable for extrusion system	Weight [g]
GR01.065	45	SLine	74
GR01.066	45	MLine	79

Dimensions

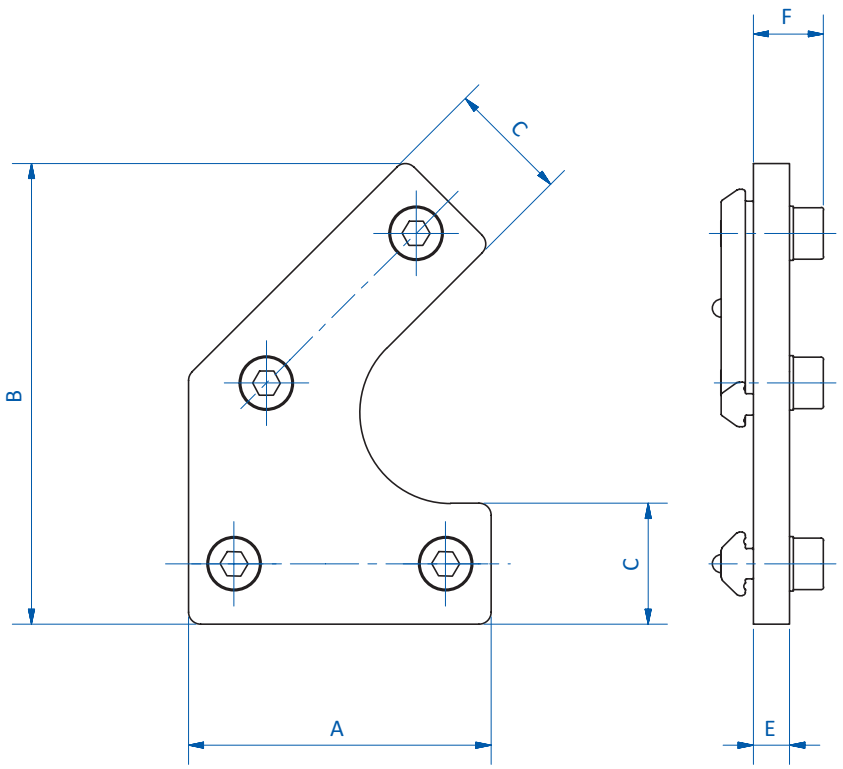

Item no.	**A** [mm]	**B** [mm]	**C** [mm]	**E** [mm]	**F** [mm]
GR01.065	50	76	20	3	9
GR01.066	50	76	25	3	9

FIPA challenge accepted

info@hidrafluid.es
976 24 32 10

Profile – Tube – Adapter

Product notes

> For the transition from profile systems to a tubular system

Technical data

Item no.	Suitable for extrusion system	Weight [g]
GR01.110	SLine / MLine	28
GR01.111	SLine / MLine	41
GR01.112	SLine / MLine	48

Dimensions

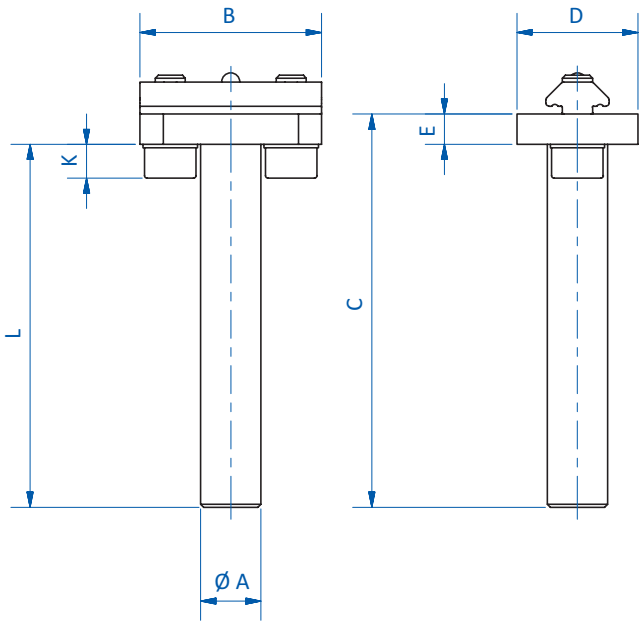

Item no.	Ø **A** [mm]	**B** [mm]	**C** [mm]	**D** [mm]	**E** [mm]	**K** [mm]	**L** [mm]
GR01.110	10	30	65	20	5	5.6	60
GR01.111	14	35	85	20	5	5.6	80
GR01.112	20	42	105	20	5	5.6	100

info@hidrafluid.es
976 24 32 10

Short angle clamps

Product notes

> For 90° mounting of gripper components
> Slotted holes allow for use with profiles from 20 mm to 30 mm in size

Technical data

Item no.	Suitable for extrusion system	Weight [g]
GR02.001A	SLine / MLine	26
GR02.003A	SLine / MLine	52
GR02.004	SLine / MLine	41
GR02.005	SLine / MLine	73
GR-XL02.003	XLine	114
GR-XL02.005	XLine	122

Dimensions

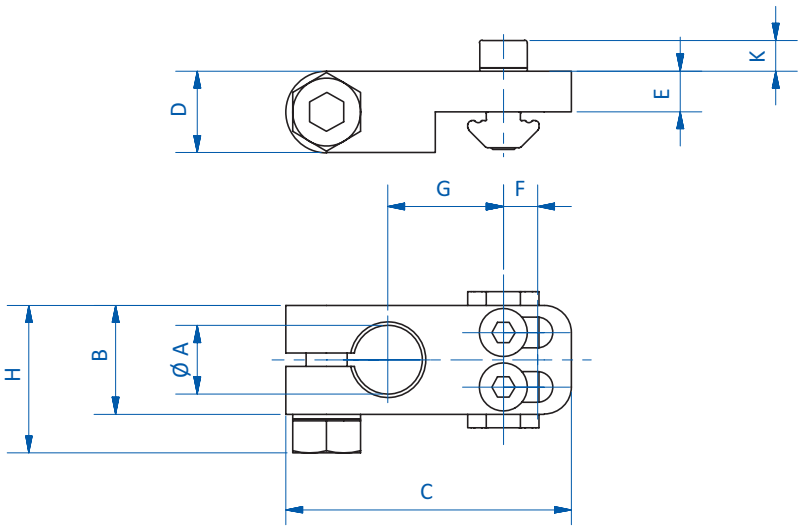

Item no.	Ø A [mm]	B [mm]	C [mm]	D [mm]	E [mm]	F [mm]	G [mm]	H [mm]	K [mm]
GR02.001A	10	16	42	12	6	5	17	21.7	4.5
GR02.003A	20	25	52	12	6.5	5	22	30.7	5.6
GR02.004	14	20	46	12	6.5	5	19	25.7	5.6
GR02.005	30	35	62	20	10	5	27	40.7	5.6
GR-XL02.003	10	30	73	15	6	10	32	35.7	8.8
GR-XL02.005	30	35	82	20	10	10	37	40.7	8.8

FIPA challenge accepted
info@hidrafluid.es
976 24 32 10

Long angle clamps

Product notes

> For 90° mounting of gripper components
> Allows for adjustment parallel and perpendicular to the profile frame

Technical data

Item no.	Suitable for extrusion system	Weight [g]
GR02.010A	SLine / MLine	52
GR02.011A	SLine / MLine	58
GR02.013A	SLine / MLine	85
GR02.016	SLine / MLine	150
GR-XL02.013	XLine	140
GR-XL02.016	XLine	213

Dimensions

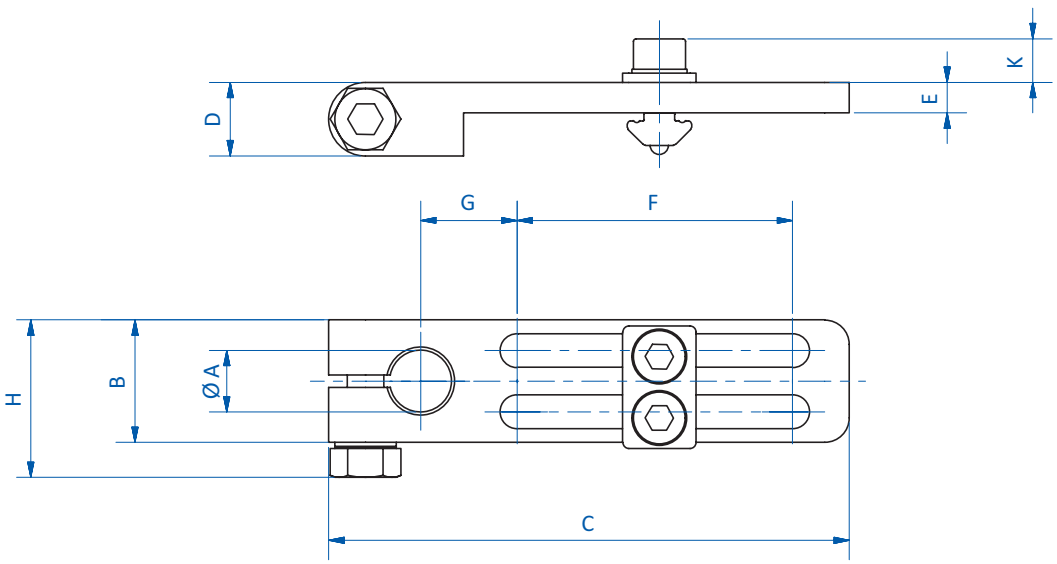

Item no.	Ø A [mm]	B [mm]	C [mm]	D [mm]	E [mm]	F [mm]	G [mm]	H [mm]	K [mm]
GR02.010A	10	20	85	12	8	45	15.8	25.7	7.1
GR02.011A	14	20	98.5	12	8.5	55	17.3	25.7	7.1
GR02.013A	20	25	114	12	8.5	64.5	20.3	30.7	7.1
GR02.016	30	35	122	20	10	65	27	40.7	7.1
GR-XL02.013	20	30	150	15	7.5	100	21	35.7	10.3
GR-XL02.016	30	36	162	20	20	100	25.5	40.7	10.3

info@hidrafluid.es
976 24 32 10

Long angle clamps – with ball joint

Product notes

> Ball joint enables variable angular adjustment of gripper components
> Allows for adjustment parallel and perpendicular to the profile frame

Technical data

Item no.	Suitable for extrusion system	Angular adjustment [°]	Weight [g]
GR02.035	SLine / MLine	38	48
GR02.036	SLine / MLine	33	60
GR02.037	SLine / MLine	31	145
GR02.038	SLine / MLine	28	238
GR-XL02.038	XLine	28	260

Dimensions

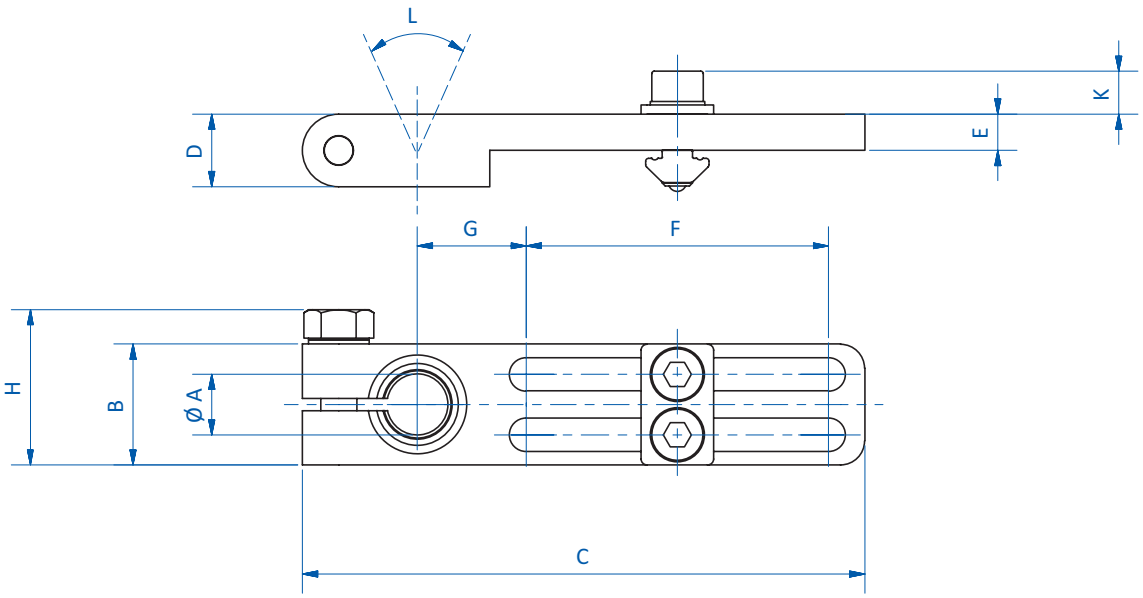

Item no.	Ø A [mm]	B [mm]	C [mm]	D [mm]	E [mm]	F [mm]	G [mm]	H [mm]	K [mm]	L [°]
GR02.035	10	20	93	12	6	50	18	25.7	7.1	38
GR02.036	14	25	107	12	6	60	20	30.7	7.1	33
GR02.037	20	35	115	20	10	60	24	40.7	7.1	31
GR02.038	30	45	136	20	17	70	30	45.7	7.1	28
GR-XL02.038	30	45	136	20	20	70	30	45.7	10.3	28

FIPA challenge accepted
info@hidrafluid.es
976 24 32 10

Angle clamps – customizable

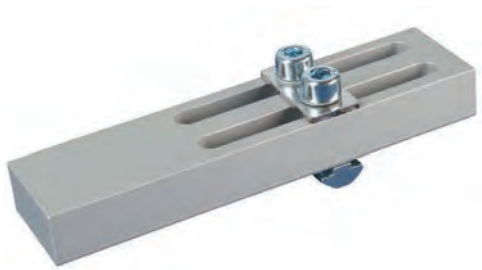

Product notes

> Mounting blank for custom solutions
> Allows for adjustment parallel and perpendicular to the profile frame

Technical data

Item no.	Suitable for extrusion system	Weight [g]
GR02.014	SLine / MLine	47
GR02.015	SLine / MLine	84

Dimensions

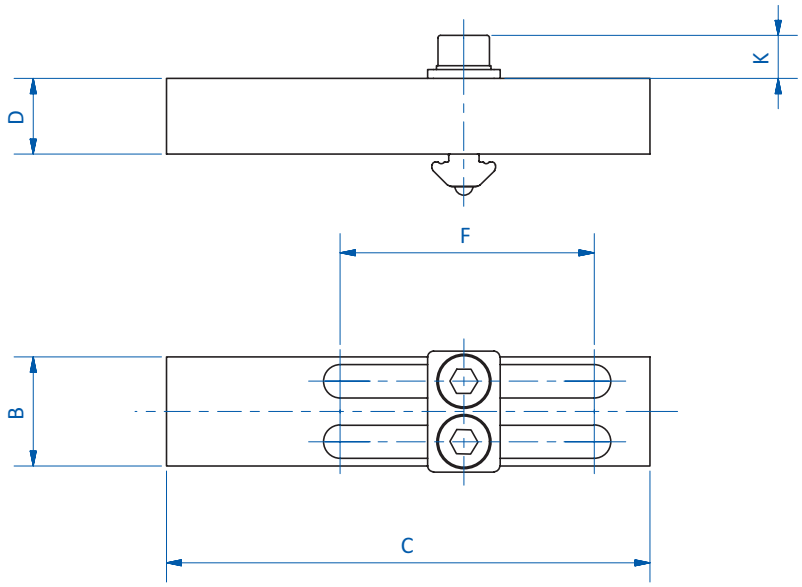

Item no.	B [mm]	C [mm]	D [mm]	F [mm]	K [mm]
GR02.014	18	80	12.5	42	7.1
GR02.015	25	100	12.5	52	7.1

info@hidrafluid.es
976 24 32 10

Long angle clamps – with swivel head

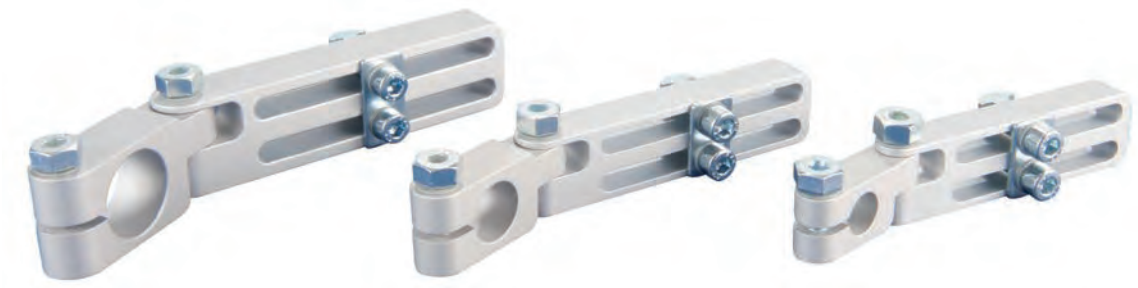

Product notes

> Swivel head allows for angle variable installation of gripper components
> Allows for adjustment parallel and perpendicular to the profile frame

Technical data

Item no.	Suitable for extrusion system	Weight [g]
GR02.026	SLine / MLine	56
GR02.027	SLine / MLine	62
GR02.028	SLine / MLine	90
GR02.029	SLine / MLine	152
GR-XL02.029	XLine	223

Dimensions

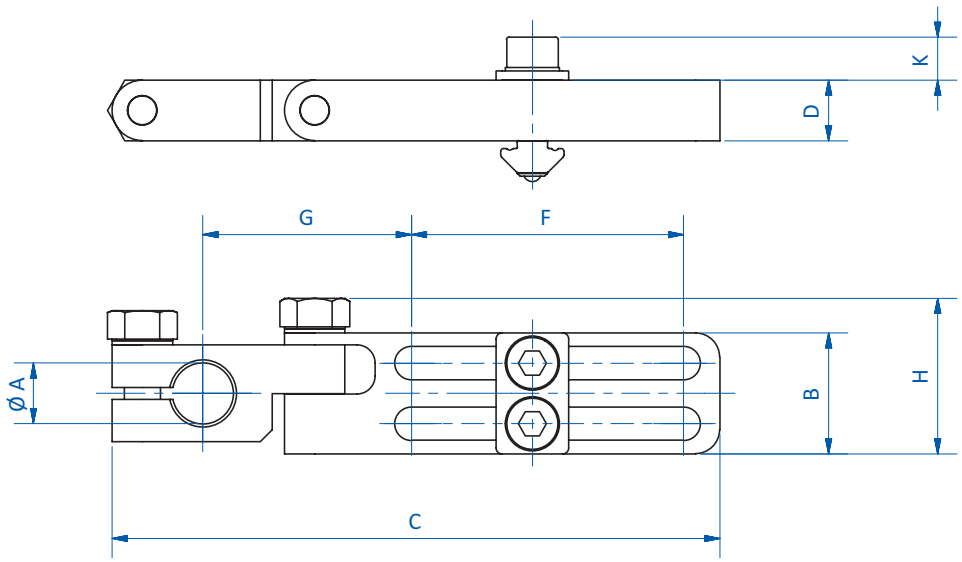

Item no.	Ø A [mm]	B [mm]	C [mm]	D [mm]	F [mm]	G [mm]	H [mm]	K [mm]
GR02.026	10	20	100.5	10	45	34.5	25.7	7.1
GR02.027	14	20	116.5	12	55	37.5	25.7	7.1
GR02.028	20	25	136	15	65	44	30.7	7.1
GR02.029	30	35	183.8	22.5	85	58.8	40.7	7.1
GR-XL02.029	30	45	185	20	85	60	45.7	10.3

FIPA challenge accepted
info@hidrafluid.es
976 24 32 10

Cross clamps

Product notes

> Elements for 90° clamping of gripper components
> Clamp allows transition from profile systems to a tubular system

Technical data

Item no.	Suitable for extrusion system	Weight [g]
GR02.020	SLine / MLine	27
GR02.022	SLine / MLine	43
GR02.023	SLine / MLine	35
GR02.024	SLine / MLine	97
GR-XL02.022	XLine	103
GR-XL02.024	XLine	172

Dimensions

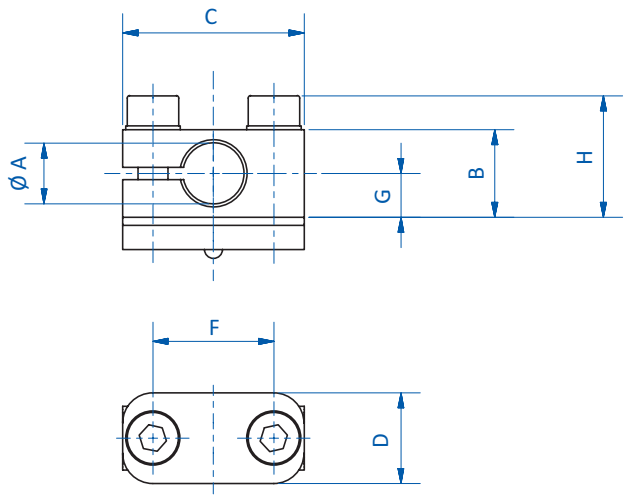

Item no.	Ø A [mm]	B [mm]	C [mm]	D [mm]	F [mm]	G [mm]	H [mm]
GR02.020	10	14.5	30	15	20	7.3	20.1
GR02.022	20	24.5	40	15	30	12.3	30.1
GR02.023	14	19.5	35	15	25	9.8	25.1
GR02.024	30	34	60	20	50	17	39.6
GR-XL02.022	20	24.5	45	20	30	12.3	33.3
GR-XL02.024	30	34	68	20	55	17	42.8

info@hidrafluid.es
976 24 32 10

Heavy-duty cross clamps

Product notes

> Heavy-duty clamps for mounting gripper components
> Channel nuts locate on perpendicular faces of the profile to minimize deflection of critical components

Technical data

Item no.	Suitable for extrusion system	Weight [g]
GR02.006	SLine	37

Dimensions

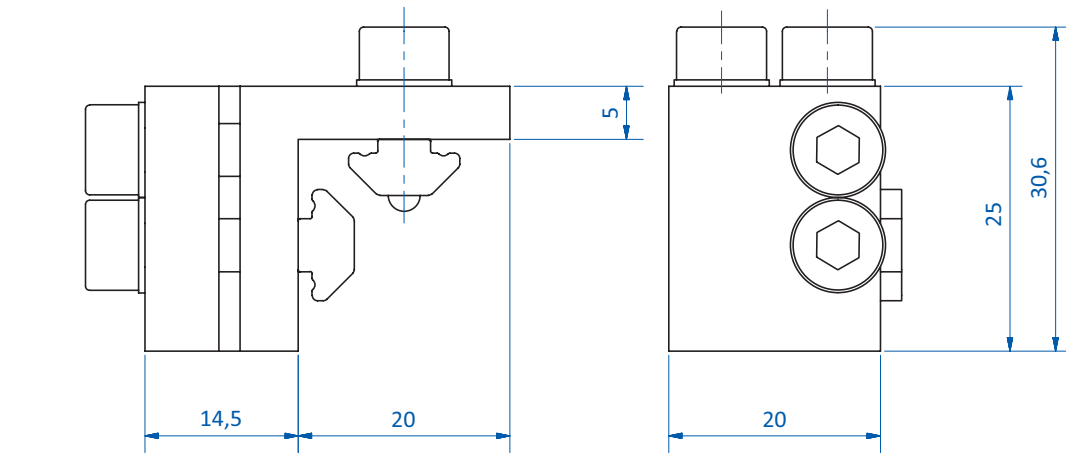

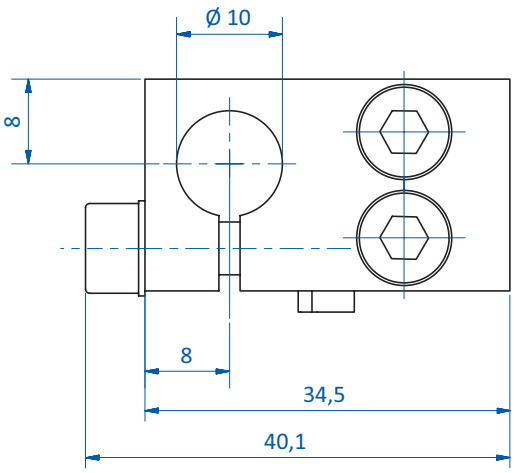

FIPA challenge accepted
info@hidrafluid.es
976 24 32 10

Cross clamps – with ball joint

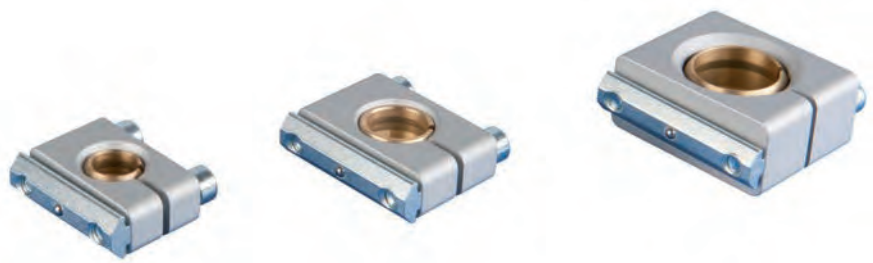

Product notes

> Elements for clamping of gripper components
> Ball joint enables variable angular adjustment of gripper components up to max. 19°

Technical data

Item no.	Suitable for extrusion system	Angular adjustment [°]	Weight [g]
GR02.020-KG	SLine / MLine	19	38
GR02.022-KG	SLine / MLine	16	98
GR02.023-KG	SLine / MLine	17	49

Dimensions

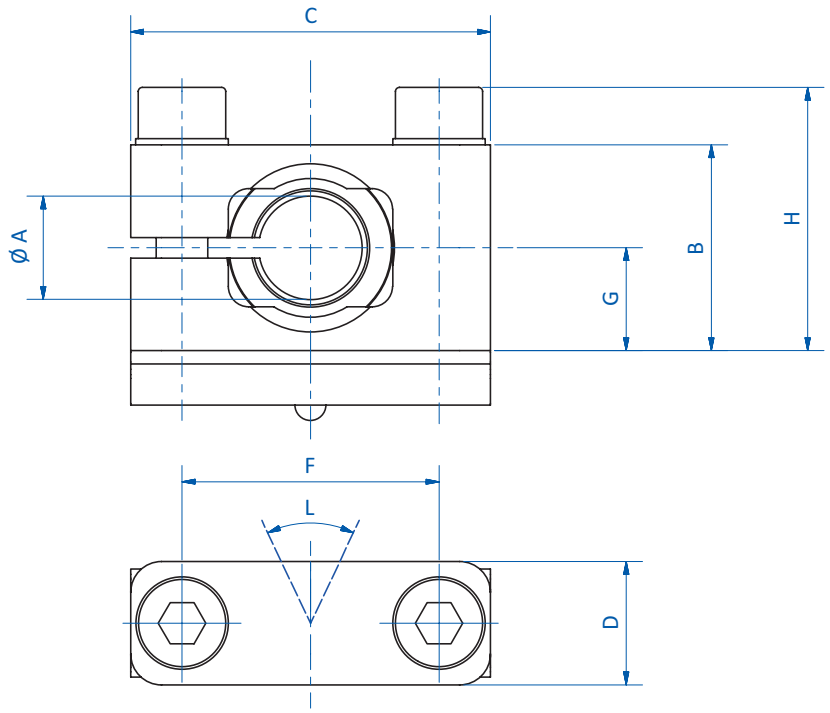

Item no.	Ø A [mm]	B [mm]	C [mm]	D [mm]	F [mm]	G [mm]	H [mm]	L [°]
GR02.020-KG	10	20	35	12	25	10	25.6	19
GR02.022-KG	20	35	45	20	35	17.5	40.6	16
GR02.023-KG	14	25	40	12	30	12.5	30.6	17

info@hidrafluid.es
976 24 32 10

Threaded mounting brackets

Product notes

> Mounting of G1/8, M16 x 1 and M20 x 1.5 suspensions and spring loaded gripper arms to profiles

Technical data

Item no.	Suitable for extrusion system	Weight [g]
GR02.230	SLine / MLine	29
GR02.231	SLine / MLine	55
GR02.232	SLine / MLine	63

Dimensions

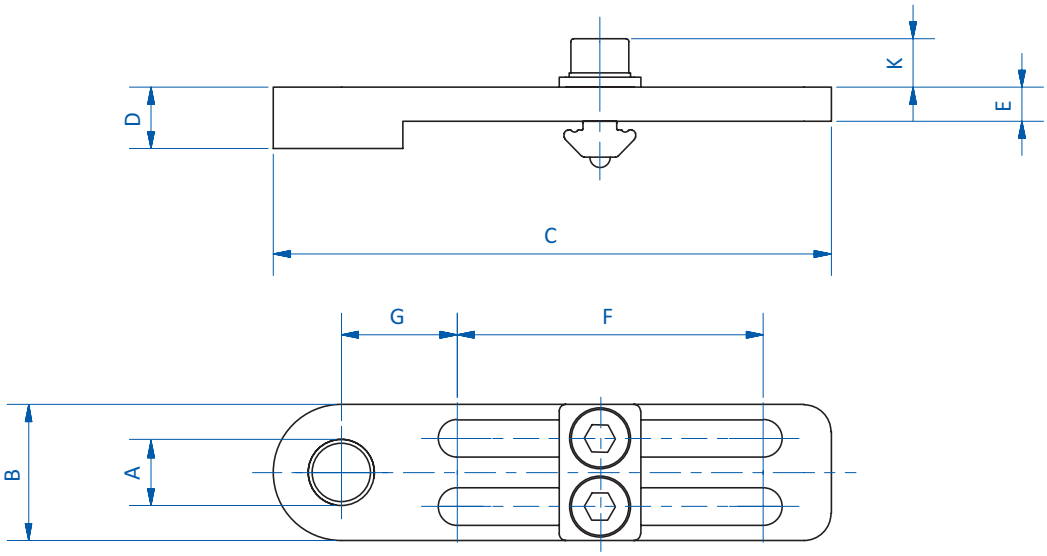

Item no.	A	B [mm]	C [mm]	D [mm]	E [mm]	F [mm]	G [mm]	K [mm]
GR02.230	G1/8	20	82	9	5	45	17	7.1
GR02.231	M16x1	26	99	12	8.5	55	21	7.1
GR02.232	M20x1.5	28	110	12	8.5	65	21	7.1

info@hidrafluid.es
976 24 32 10

Parallel clamps

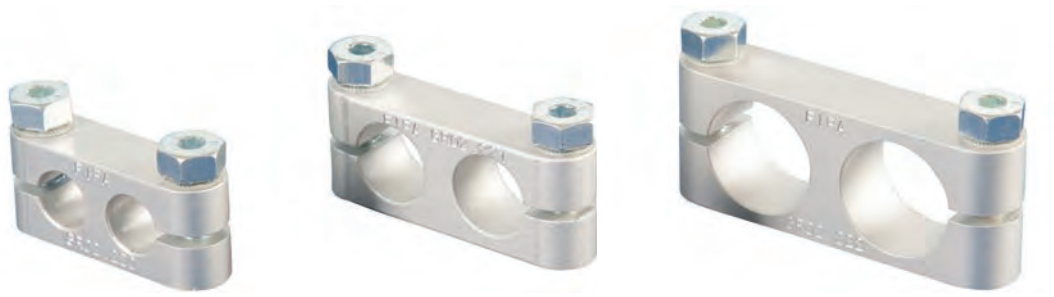

Product notes

> Parallel connection of two clamping shafts

Technical data

Item no.	Weight [g]
GR02.220	30
GR02.221	35
GR02.222	60

Dimensions

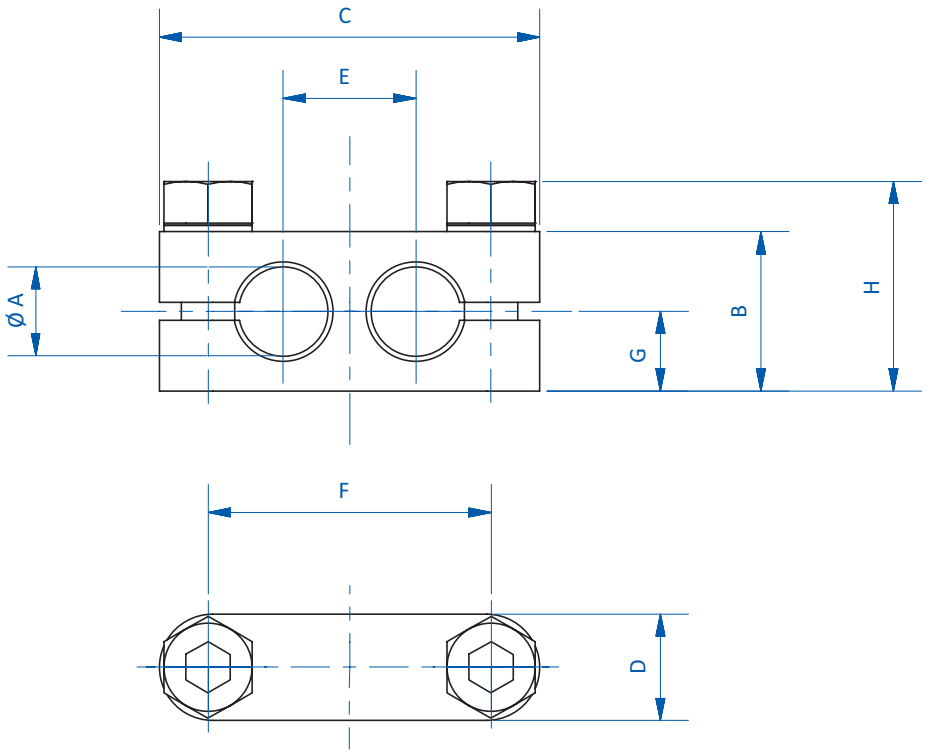

Item no.	Ø A [mm]	B [mm]	C [mm]	D [mm]	E [mm]	F [mm]	G [mm]	H [mm]
GR02.220	10	18	43	12	15	32	9	23.7
GR02.221	14	20	52	12	20	41	10	25.7
GR02.222	20	25	64	14	26	53	12.5	30.7

info@hidrafluid.es
976 24 32 10

Cross clamps 90°

Product notes

> Perpendicular clamping of tubular components
> Versatile 90° connection of two clamping shafts of the same size

Technical data

Item no.	Weight [g]
GR02.210	28
GR02.211	33
GR02.212	58

Dimensions

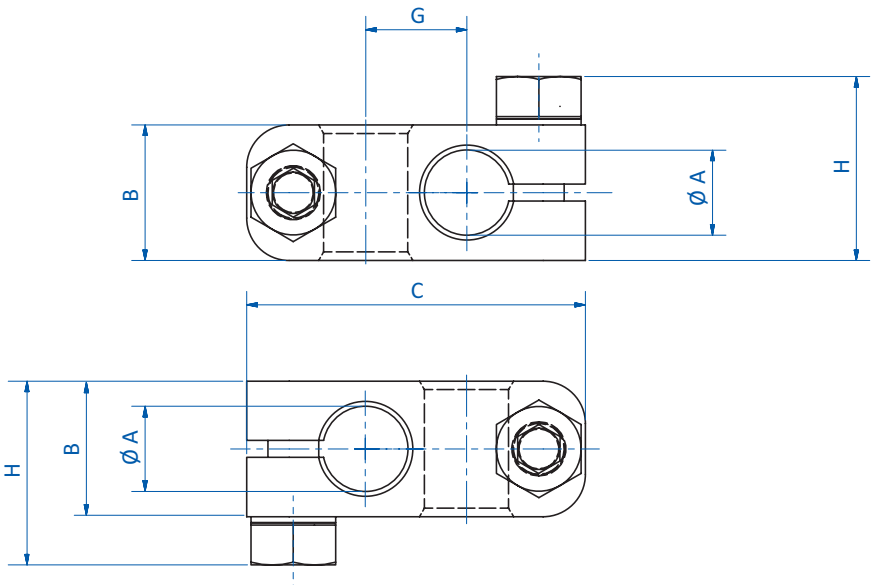

Item no.	Ø A [mm]	B [mm]	C [mm]	G [mm]	H [mm]
GR02.210	10	16	40	12	21.7
GR02.211	14	18	48	16	23.7
GR02.212	20	24 - 0	60	22	29.7

FIPA challenge accepted
info@hidrafluid.es
976 24 32 10

Locator pins

Product notes

> Alignment of EOAT and locating of parts
> Locator pins made of POM
> Compatible with extension tubes

Technical data

Item no.	Weight [g]	Suitable extension tube
GR06.001	4	GR06.020 (p.90)
GR06.002A	22	GR06.021A (p.90)
GR06.003	63	GR06.022 (p.90)

Dimensions

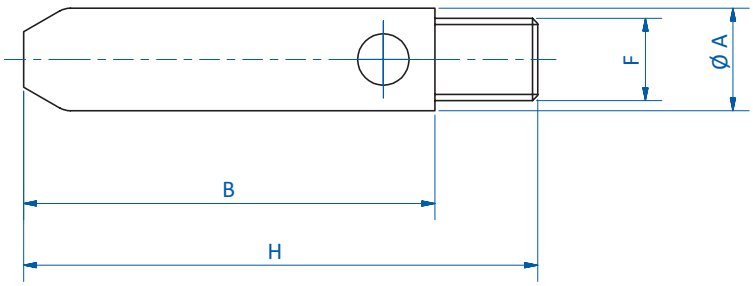

Item no.	F	Ø A [mm]	B [mm]	H [mm]
GR06.001	M8x1	10	40	50
GR06.002A	M12x1	14	85	100
GR06.003	M17x1	20	135	150

info@hidrafluid.es
976 24 32 10

Extension tubes

Product notes

> Compatible with locator pins, finger grippers and sprue grippers

Technical data

Item no.	Clamping Ø [mm]	Weight [g]	Suitable locator pins
GR06.020	10	10	GR06.001 (p.89)
GR06.021A	14	22	GR06.002A (p.89)
GR06.022	20	28	GR06.003 (p.89)

Dimensions

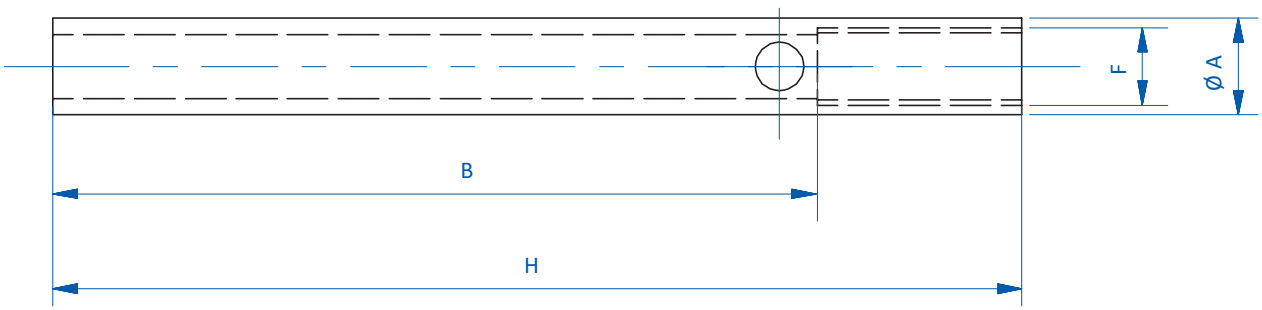

Item no.	F	Ø A [mm]	B [mm]	H [mm]
GR06.020	M8x1	10	87	100
GR06.021A	M12x1	14	82	100
GR06.022	M17x1	20	82	100

FIPA challenge accepted
info@hidrafluid.es
976 24 32 10

Angle connectors for vacuum cups

Product notes

> Two vacuum ports
> Slotted holes allow for use with profiles from 20 mm to 30 mm and 40 mm to 60 mm in size

Technical data

Item no.	Suitable for extrusion system	Weight [g]
GR02.030A	SLine / MLine	18
GR02.031A	SLine / MLine	37
GR-XL02.033	XLine	94

Dimensions

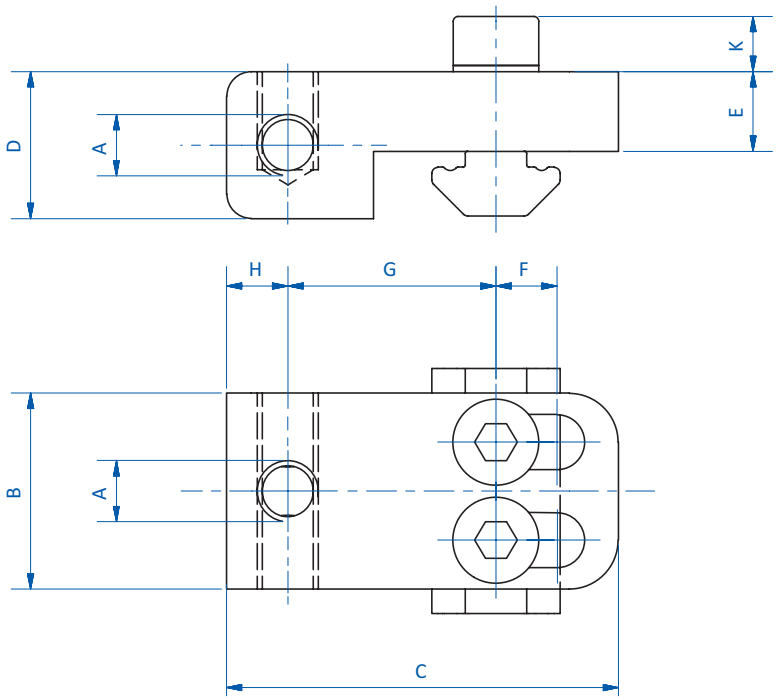

Item no.	A	B [mm]	C [mm]	D [mm]	E [mm]	F [mm]	G [mm]	H [mm]	K [mm]
GR02.030A	M5	16	32	12	6.5	5	17	5	4.5
GR02.031A	G1/8	25	38	15	6.5	5	20	8	5.6
GR-XL02.033	G1/4	30	60	20	10	10	29	11	8.8

info@hidrafluid.es
976 24 32 10

Long angle connectors for vacuum cups

Product notes

> Two vacuum ports
> Slotted holes allow for adjustment perpendicular to the profile frame

Technical data

Item no.	Suitable for extrusion system	Weight [g]
GR02.040	SLine / MLine	44
GR02.041	SLine / MLine	58
GR02.043	SLine / MLine	86

Dimensions

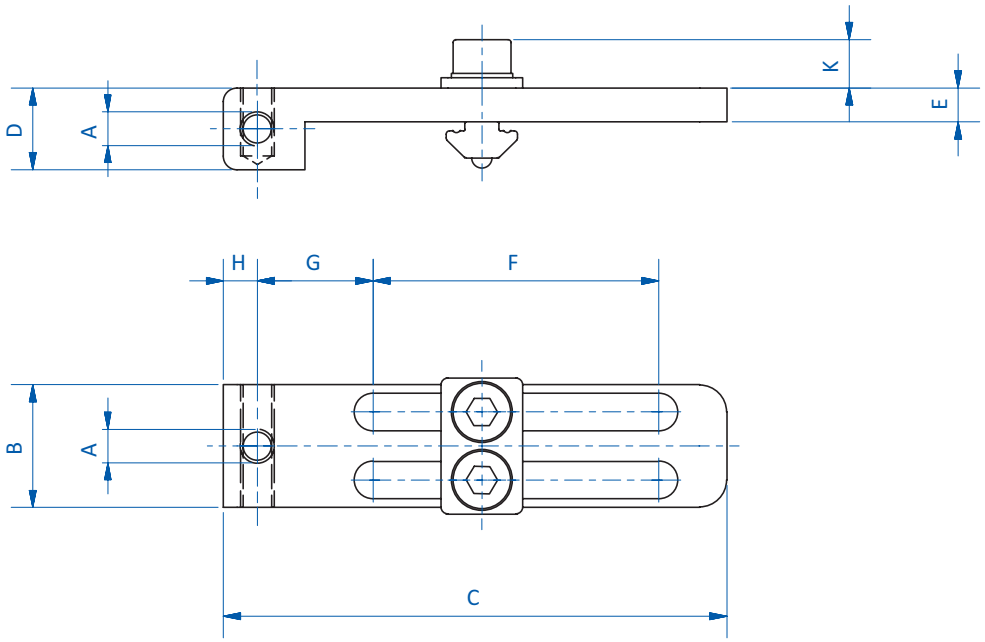

Item no.	A	B [mm]	C [mm]	D [mm]	E [mm]	F [mm]	G [mm]	H [mm]	K [mm]
GR02.040	M5	18	74	12	5	42	17	5	7.1
GR02.041	G1/8	25	90	15	8.5	52	20.8	8	7.1
GR02.043	G1/4	30	94	18	8.5	52	22	10	7.1

FIPA challenge accepted
info@hidrafluid.es
976 24 32 10

Vacuum cup connectors – perpendicular

Product notes

> Compact mounting of vacuum cups to profiles

Technical data

Item no.	Suitable for extrusion system	Weight [g]
GR02.050	SLine / MLine	24
GR02.051	SLine / MLine	36
GR02.053	SLine / MLine	49

Dimensions

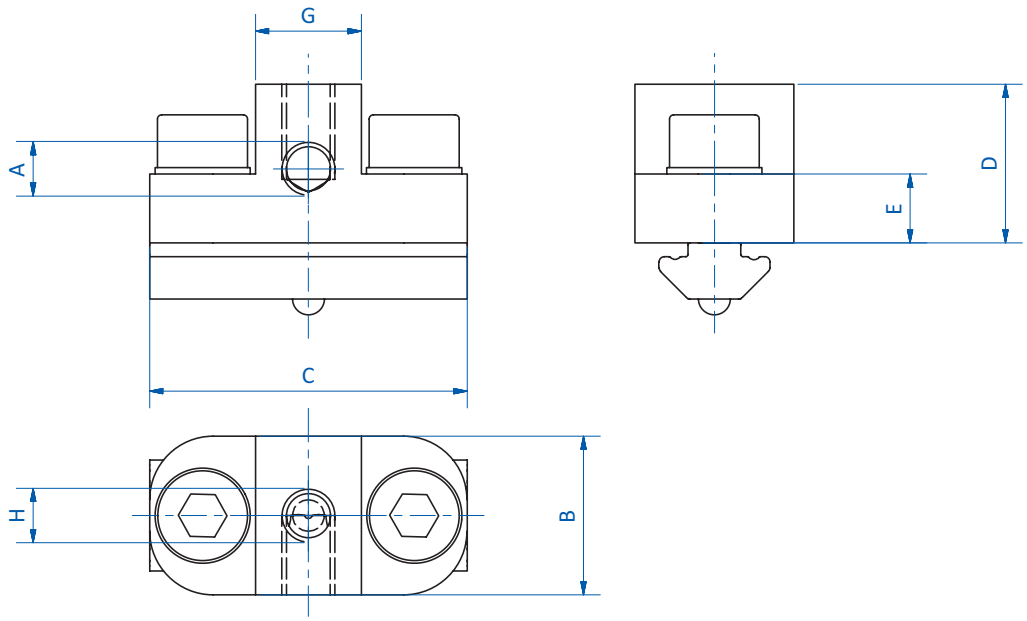

Item no.	A	H	B [mm]	C [mm]	D [mm]	E [mm]	G [mm]
GR02.050	M5	M5	15	30	15	6.5	10
GR02.051	G1/8	G1/8	15	40	20	6.5	20
GR02.053	G1/4	G1/4	20	40	25	6.5	20

info@hidrafluid.es
976 24 32 10

Vacuum cup connectors – rotatable 360°

Product notes

> 360° adjustability
> Two vacuum ports

Technical data

Item no.	Suitable for extrusion system	Weight [g]
GR02.060	SLine / MLine	24
GR02.061	SLine / MLine	48
GR02.063	SLine / MLine	69

Dimensions

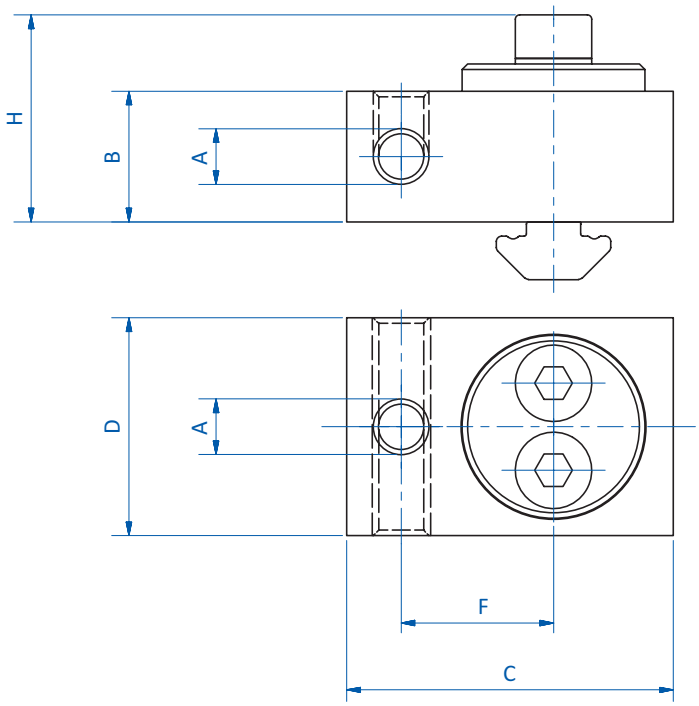

Item no.	A	B [mm]	C [mm]	D [mm]	F [mm]	H [mm]
GR02.060	M5	12	30	20	14	19
GR02.061	G1/8	15	43	25	20	22.1
GR02.063	G1/4	20	45	30	21	25.6

FIPA challenge accepted
info@hidrafluid.es
976 24 32 10

Vacuum cup connectors – rotatable

Product notes

> For mounting vacuum cups to profiles or compact cylinders
> Suitable for all standard compact cylinders (anti-twist) in accordance with ISO 21287 standard

Technical data

Item no.	Suitable for extrusion system	Weight [g]
GR07.020	SLine / MLine	79

Dimensions

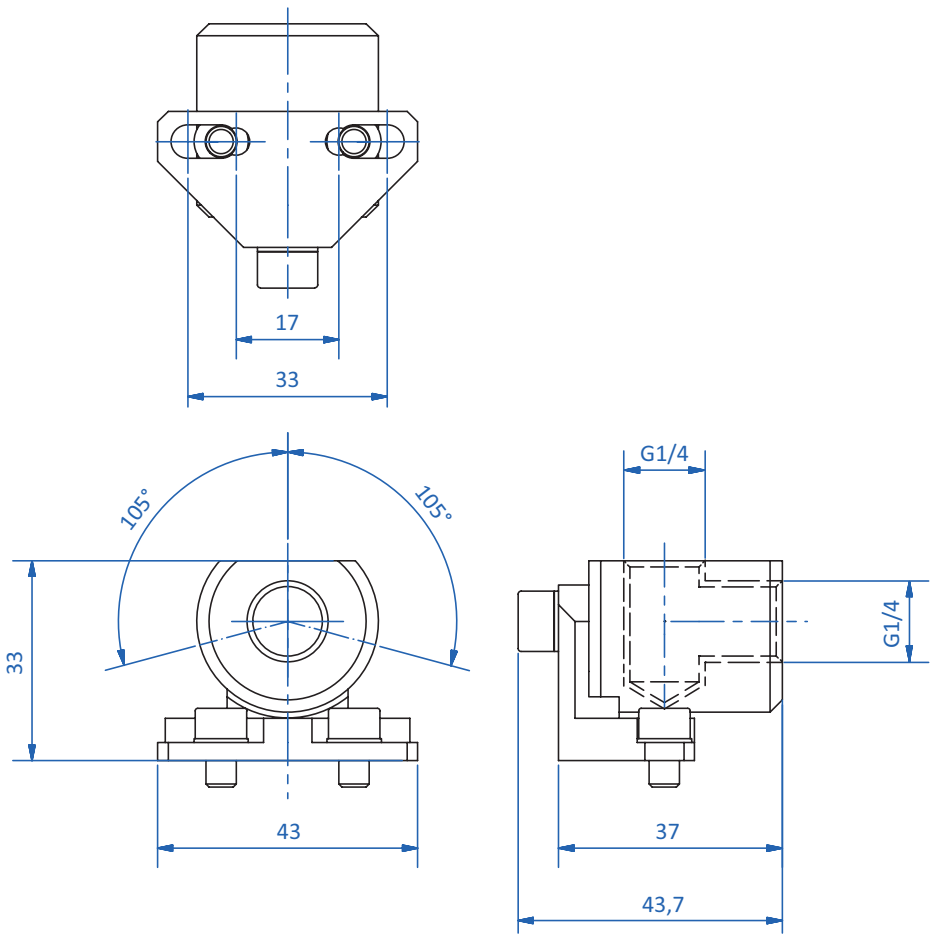

info@hidrafluid.es
976 24 32 10

Air and vacuum manifolds – stackable

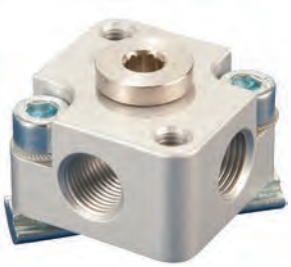

Product notes

> Space-saving distribution of air or vacuum
> One inlet, four outlets per manifold
> Can be expanded by stacking additional manifolds
> When stacking the air manifold, a bore hole with max. Ø 7 mm is to be provided in the center of the underside
> Slot nut, O-ring for sealing and sealing plug included in scope of delivery

Technical data

Item no.	Suitable for extrusion system	Weight [g]	Suitable sealing plugs
GR05.001A	SLine / MLine	50	77.009 (p.455)

Dimensions

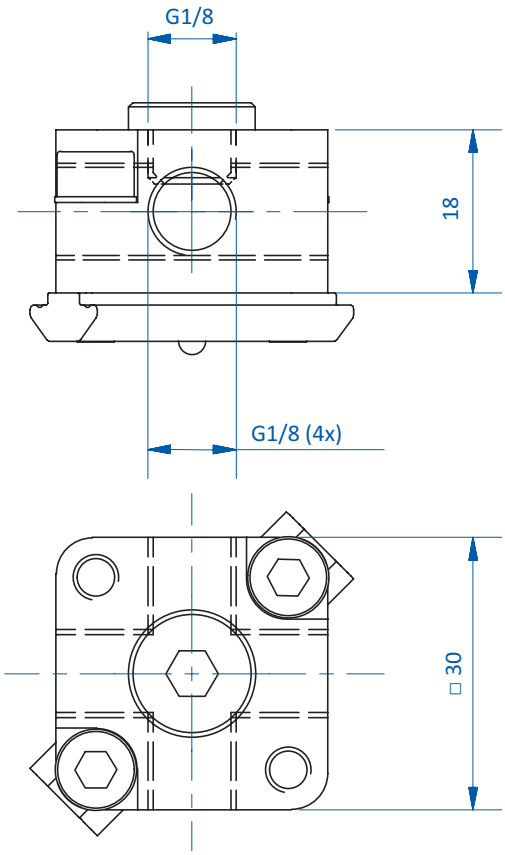

FIPA challenge accepted
info@hidrafluid.es
976 24 32 10

Air and vacuum manifolds

Product notes

> Distribution of air or vacuum in gripper systems

Technical data

Item no.	Suitable for extrusion system	Circuit	Number of inlets / outlets	Weight [g]	Suitable sealing plugs
GR05.001	SLine / MLine	1	1 inlet, 4 outlets	69	77.009 (p.455)
GR05.002	SLine / MLine	2	Each circuits with 1 inlet, 4 outlets	106	77.009 (p.455)
GR05.003	SLine / MLine	2	Each circuits with 1 inlet, 6 outlets	155	77.009 (p.455) 77.008 (p.455)

Dimensions

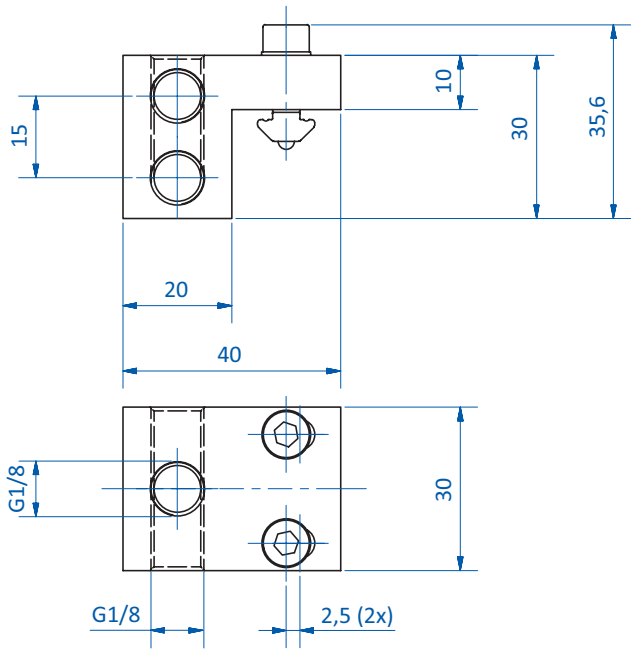

GR05.001

Continued on the next page

info@hidrafluid.es
976 24 32 10

Dimensions

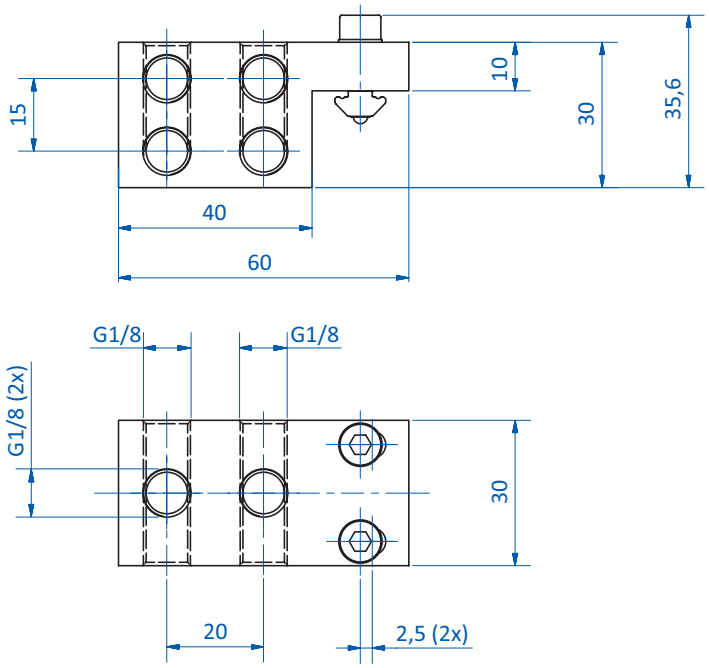

GR05.002

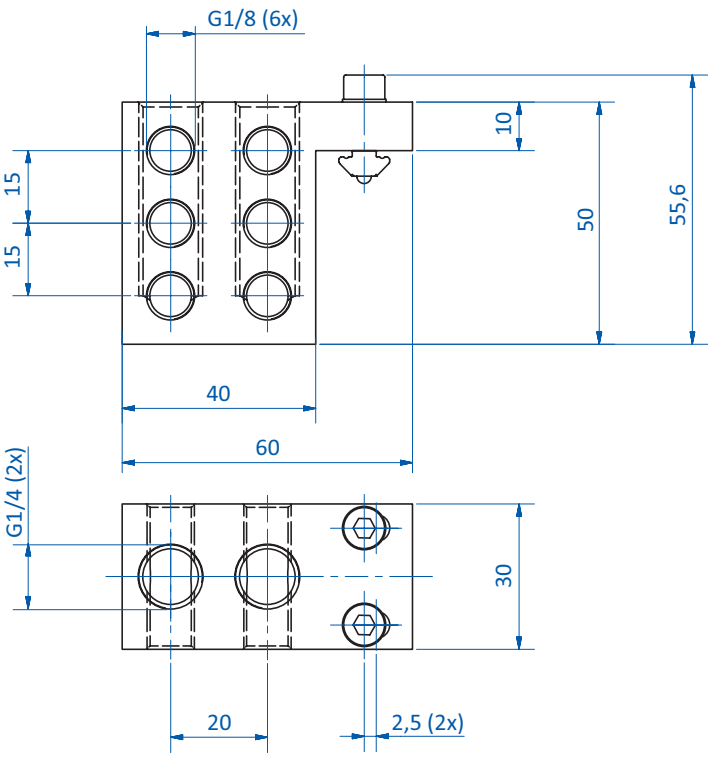

GR05.003

info@hidrafluid.es
976 24 32 10

Swivelling unit – universal, double-acting

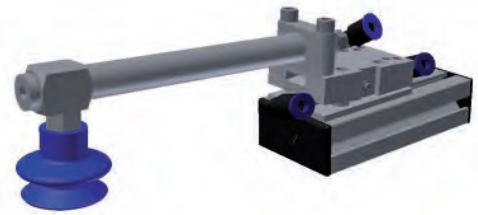

Product notes

> Space-saving lateral application of vacuum cups to the workpiece
> Double-acting, controlled swivel movement and short duty cycles

Technical data

Item no.	Principle of operation	Pressure range [bar (psi)]	Angle stroke [°]	Weight [g]
GR02.300	Double-acting	2 - 8 (29 - 116)	7.5	120

Dimensions

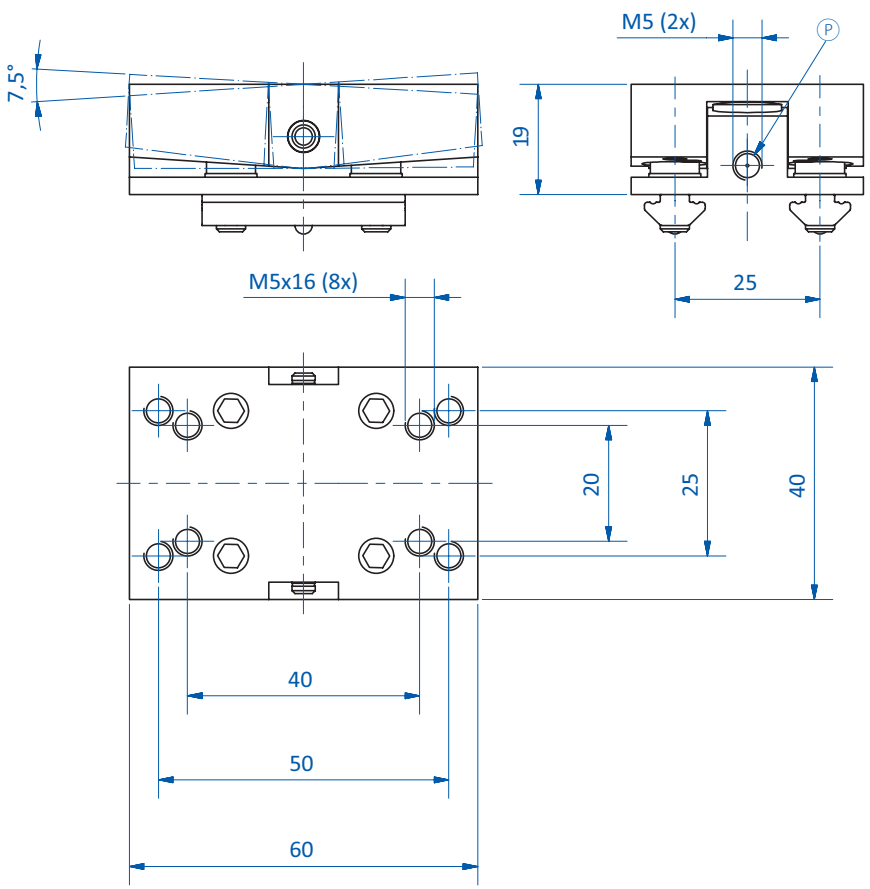

Ⓟ = Compressed air connection

info@hidrafluid.es
976 24 32 10

Pneumatic centering units

STRONG HOLDING FORCE

Product notes

> Single-acting centering element for high-precision demolding
> Strong holding force in the coupled system
> Guiding sleeve embedded in the mold
> Optional position monitoring (locked/unlocked) via PNP/NPN sensors
> Sensor is fixed to centering unit via mounting bracket GR07.520S clamping diameter 20 mm
> PNP and NPN sensors: C-Nut, straight: GR04.198, GR04.198/NPN

Technical data

Item no.	Description	Holding force at 6 bar (87 psi) [N]	Accessories
GR07.520	Centering unit	750	Sensor: GR04.198 (p.404) Sensor: GR04.198/NPN (p.404) Sensor mounting bracket: GR07.520S (p.101)
GR07.521	Guiding sleeve	--	--

Dimensions

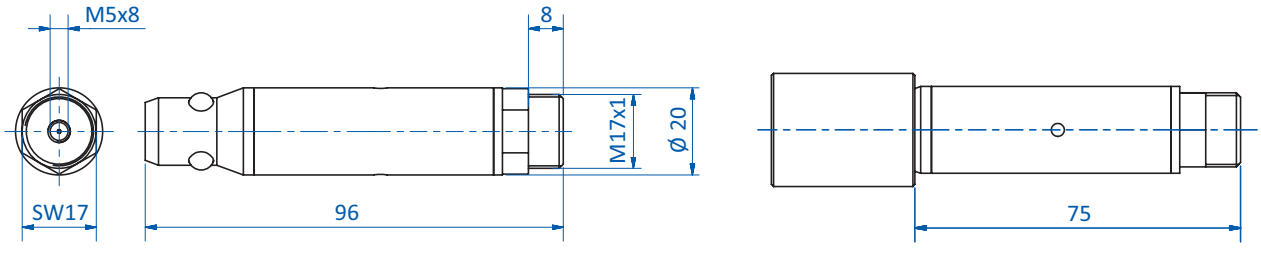

GR07.520

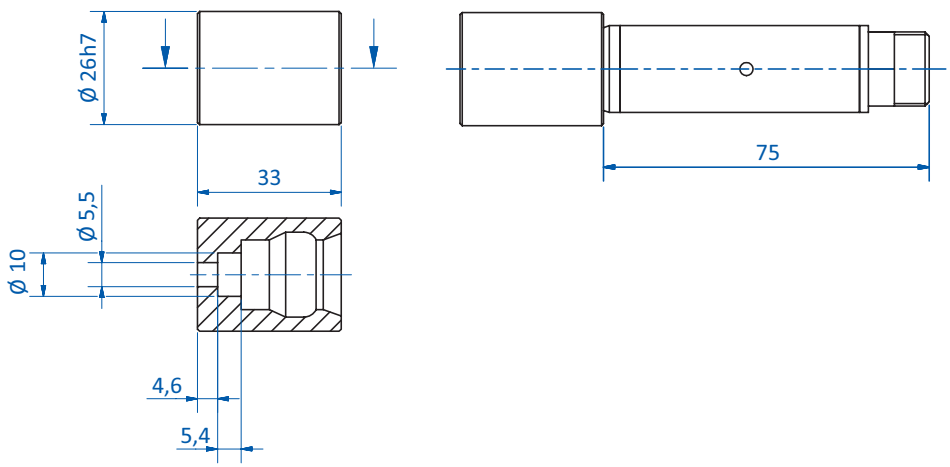

GR07.521

info@hidrafluid.es
976 24 32 10

Sensor mounting bracket for centering unit

Display with centering unit

Product notes

> Mounting bracket for monitoring locking stage (locked/unlocked)

Technical data

Item no.	Suitable for sensor	Suitable for centering unit	Weight [g]
GR07.520S	GR04.198, GR04.198/NPN	GR07.520	7

Dimensions

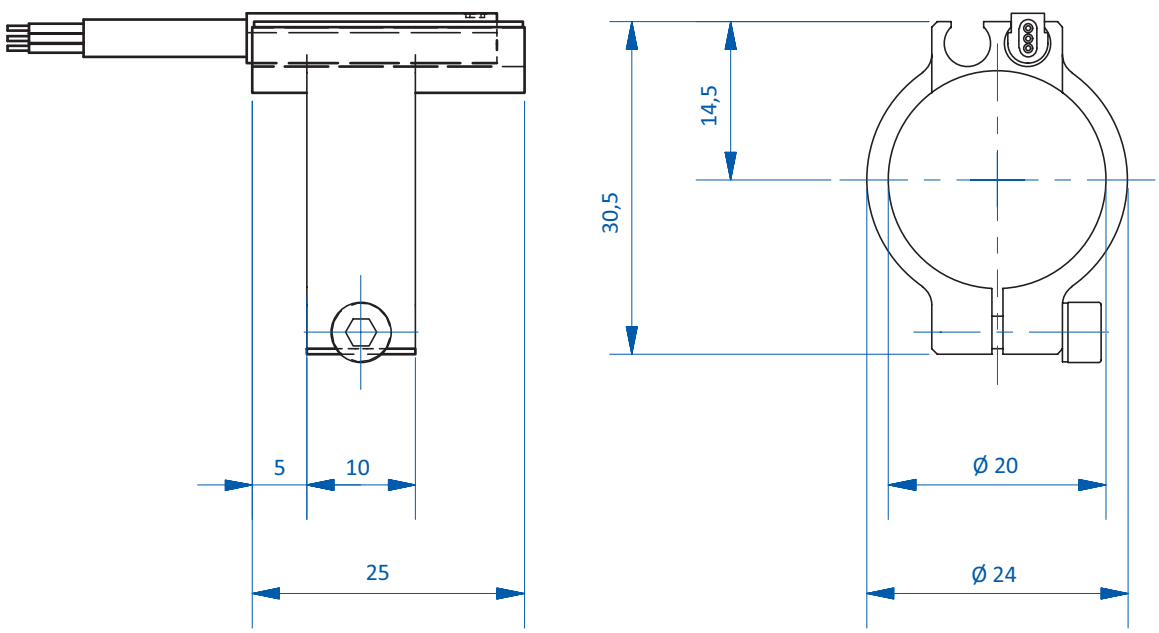

info@hidrafluid.es
976 24 32 10

Clamps for Plate-based EOAT

SUITABLE FOR PLATE-BASED EOAT

Product notes

> Clamps for mounting gripper components to plate-based EOAT

Technical data

Item no.	Weight [g]
GR06.060	16
GR06.061	24
GR06.062	82
GR06.063	138

Dimensions

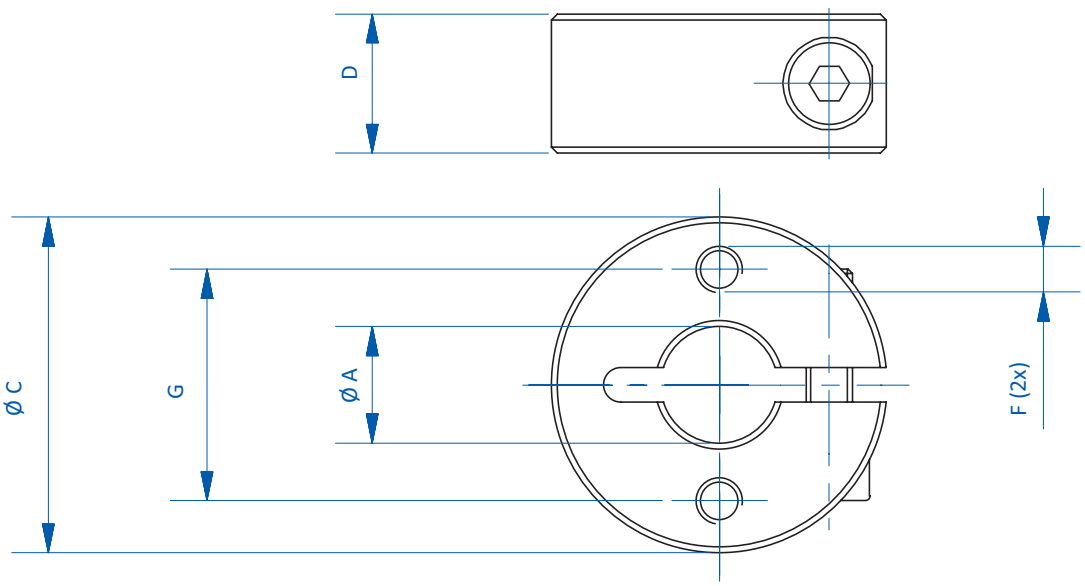

Item no.	Ø A [mm]	F	G [mm]	Ø C [mm]	D [mm]
GR06.060	10	M4	20	29	12
GR06.061	14	M5	25	34	15
GR06.062	20	M6	32	49	22.5
GR06.063	30	M8	45	59	30

info@hidrafluid.es
976 24 32 10

Gripper arms at a glance 104

Angle arms 105

Suction fingers 112

info@hidrafluid.es
976 24 32 10

FIPA Gripper arms

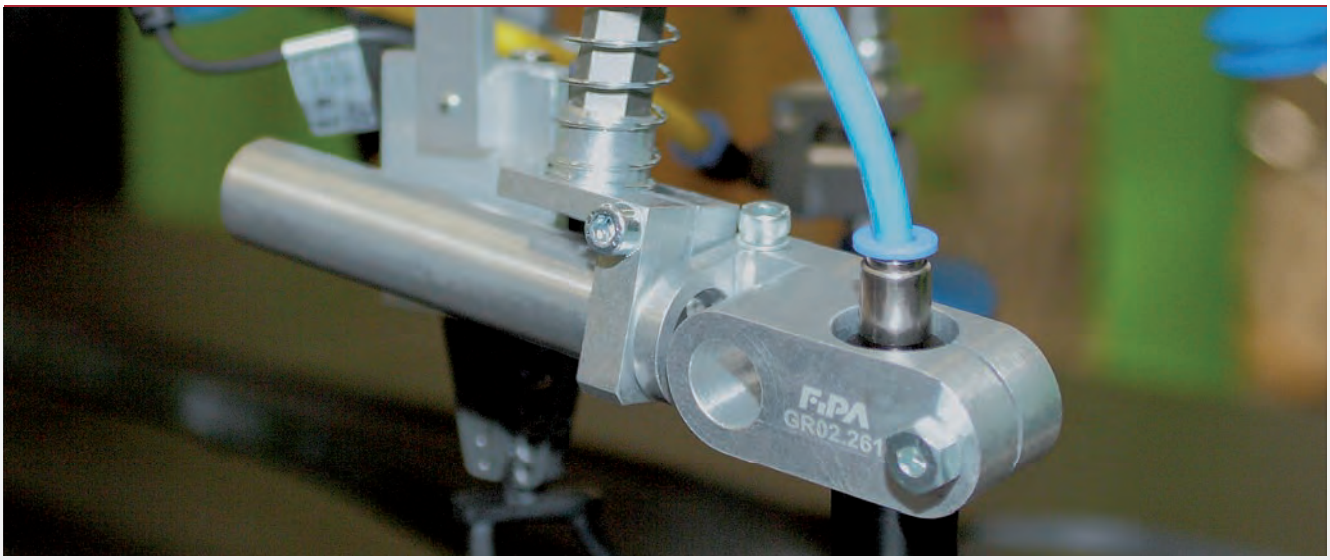

Angle arms, elbow or rigid

> Elements for integration of gripper components
> Secure clamping even under high load

GR03.160 - GR03.165
> Spring loaded elbow, rotatable, torsionally rigid
> Compensates stroke when product is ejected from sprue mold
> Precise function even with angular loads

GR02.070A - GR02.100
> Rigid arms

GR02.240 - GR02.262
> Modular elbow, heavy duty
> Clamping heads can be exchanged with suction heads of GR03.240–GR03.262

> See page 105

Arms for vacuum cups, elbow or rigid

> Elements for integration of vacuum cups in gripper systems

GR03.120B - GR03.153B
> Spring loaded elbow, torsionally rigid
> Compensates stroke when product is ejected from sprue mold
> Precise function even with angular loads

GR03.080A - GR03.115
> Spring-loaded, rigid arms, torsionally rigid

GR03.240 - GR03.262
> Modular, heavy duty
> Suction heads can be exchanged with clamping heads of GR02.240 - GR02.262

> See page 112

info@hidrafluid.es
976 24 32 10

Angle arms – rigid

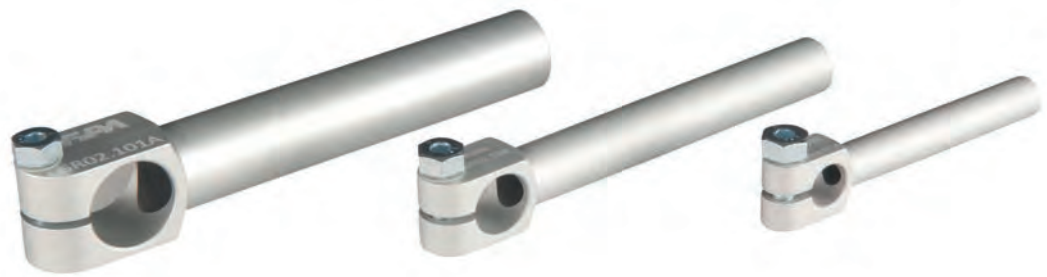

Product notes

> Components for mounting grippers, gripper fingers or gripper arms

Technical data

Item no.	Weight [g]
GR02.070A	20
GR02.071A	24
GR02.072A	28
GR02.083	36
GR02.084	45
GR02.085	52
GR02.100	61
GR02.101A	80
GR02.102A	95
GR02.104	137
GR02.105	171
GR02.106	205
GR02.107	239

Dimensions

Ø A [mm]	B [mm]	C [mm]	D [mm]	G [mm]	H [mm]	L [mm]
10	16	51	16	7	21.7	30
10	16	81	10	7	21.7	60
10	16	111	16	7	21.7	90
14	18	70.5	20	9.5	23.7	45
14	18	115.5	20	9.5	23.7	90
14	18	155.5	20	9.5	23.7	130
20	24	84	25	13	29.7	50
20	24	134	25	13	29.7	100
20	24	184	25	13	29.7	150
30	36	98	30	21	42.3	50
30	36	148	30	21	42.3	100
30	36	198	30	21	42.3	150
30	36	248	30	21	42.3	200

Dimensions

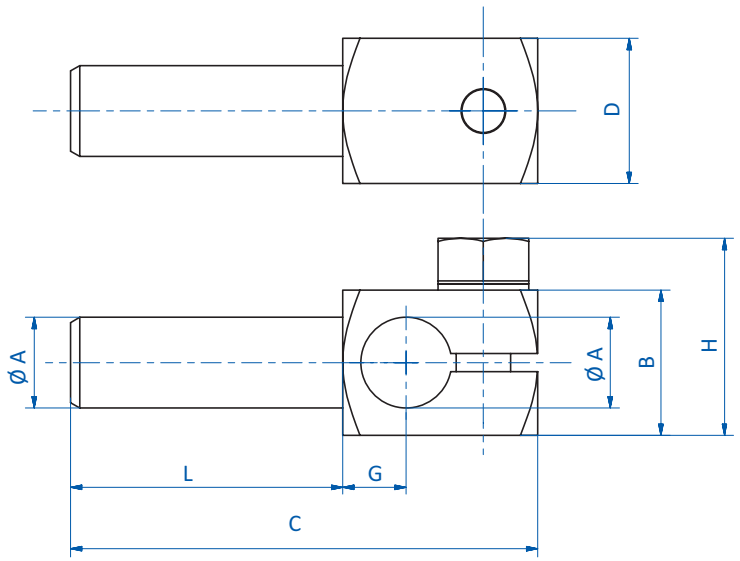

info@hidrafluid.es
976 24 32 10

Elbow arms – adjustable

Product notes

> Components for mounting grippers, gripper fingers or gripper arms
> Angle adjustment +/- 95°

Technical data

Dimensions

Item no.	Weight [g]	Ø A [mm]	Ø F [mm]	B [mm]	C [mm]	E [mm]	G [mm]	H [mm]	L [mm]
GR02.140	36	10	10	16	65.5	8.5	22	21.7	30
GR02.141	40	10	10	16	95.5	8.5	22	21.7	60
GR02.142	45	10	10	16	125.5	8.5	22	21.7	90
GR02.180	42	14	10	16	90	10	27	21.7	45
GR02.181	51	14	10	16	135	10	27	21.7	90
GR02.182	59	14	10	16	175	10	27	21.7	130
GR02.153	60	14	14	18	90	10	27	23.7	45
GR02.154	68	14	14	18	135	10	27	23.7	90
GR02.155	78	14	14	18	175	10	27	23.7	130
GR02.170	87	20	20	24	111	17	40	29.7	50
GR02.171	103	20	20	24	161	17	40	29.7	100
GR02.172	120	20	20	24	211	17	40	29.7	150

Dimensions

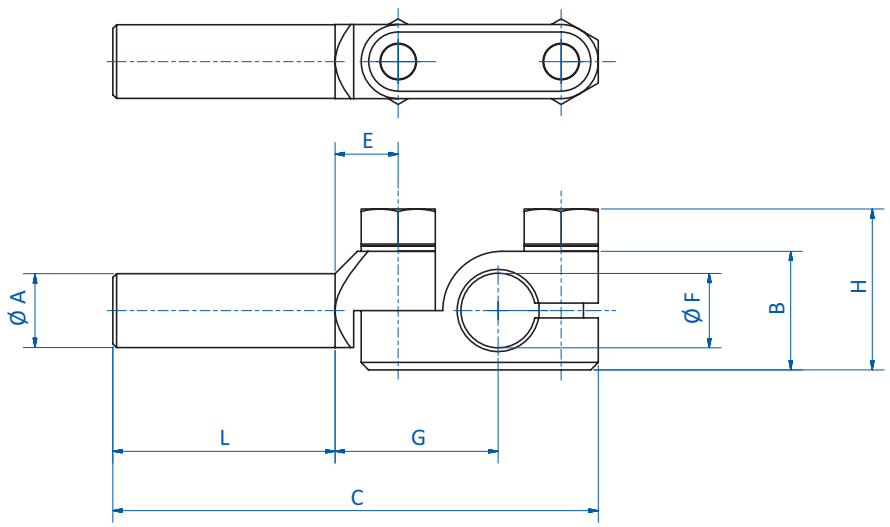

FIPA challenge accepted
info@hidrafluid.es
976 24 32 10

Elbow arms – adjustable, heavy duty

Product notes

> Components for mounting grippers, gripper fingers or gripper arms
> Secure clamping under heavy load
> Angle adjustment +/- 100°
> Heads are interchangeable with the heads of suction fingers GR03.240 - GR03.242, GR03.250 - GR03.252 und GR03.260 - GR03.262

Technical data

Dimensions

Item no.	Weight [g]	Ø A [mm]	B [mm]	C [mm]	D [mm]	E [mm]	F [mm]	G [mm]	H [mm]	L [mm]
GR02.240	29	10	14	72	14	14	4.5	26	30.7	30
GR02.241	32	10	14	102	14	14	4.5	26	30.7	60
GR02.242	35	10	14	132	14	14	4.5	26	30.7	90
GR02.250	50	14	18	97	18	16	4.5	34	32.7	45
GR02.251	58	14	18	142	18	16	4.5	34	32.7	90
GR02.252	66	14	18	182	18	16	4.5	34	32.7	130
GR02.260	89	20	24	116	24	19	4.5	43	38.7	50
GR02.261	104	20	24	166	24	19	4.5	43	38.7	100
GR02.262	119	20	24	216	24	19	4.5	43	38.7	150

Dimensions

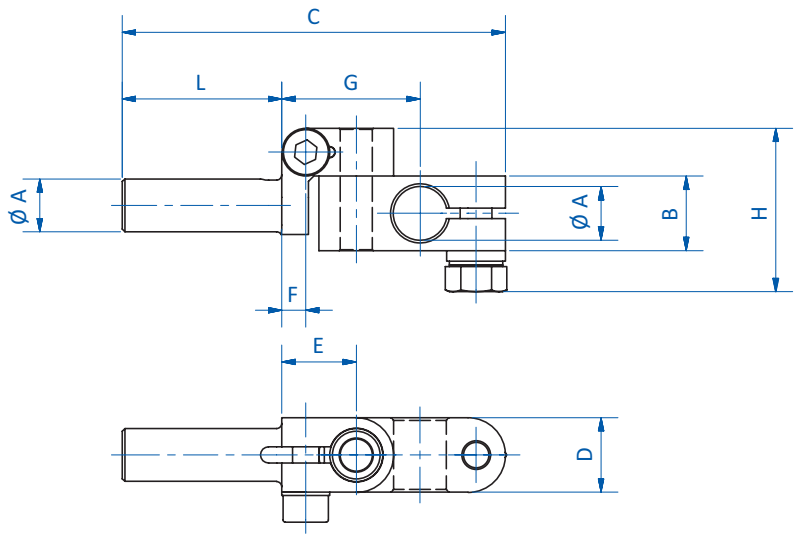

info@hidrafluid.es
976 24 32 10

Rotary heads for angle arms Ø 30 mm – heavy duty

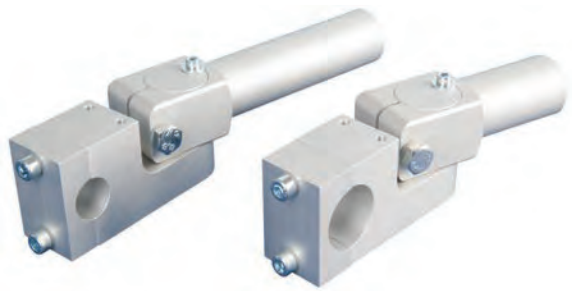

Rotary head GR02.270 with angle arm GR02.104

Product notes

> Rotary heads for angle arms with shaft diameter 30 mm
> Integration of gripper elements with clamping diameter 20 mm or 30 mm
> Secure clamping even under heavy load
> Pivoting range 0° to ~130°, can be freely adjusted in two directions
> Please order your combination of gripper arm and rotary head

Technical data

Item no.	Clamping Ø [mm]	Weight [g]	Suitable for angle arms
GR02.270	20	332	GR02.104, GR02.105, GR02.106, GR02.107
GR02.273	30	319	GR02.104, GR02.105, GR02.106, GR02.107

Dimensions

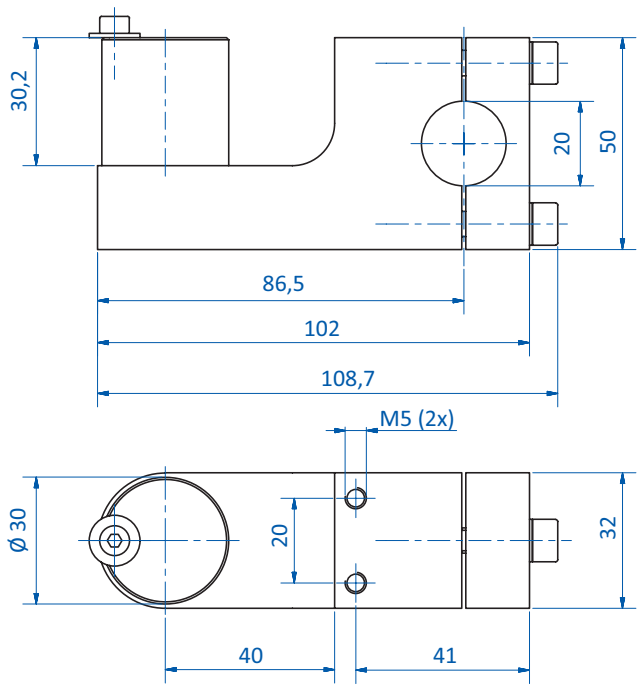

GR02.270

info@hidrafluid.es
976 24 32 10

Dimensions

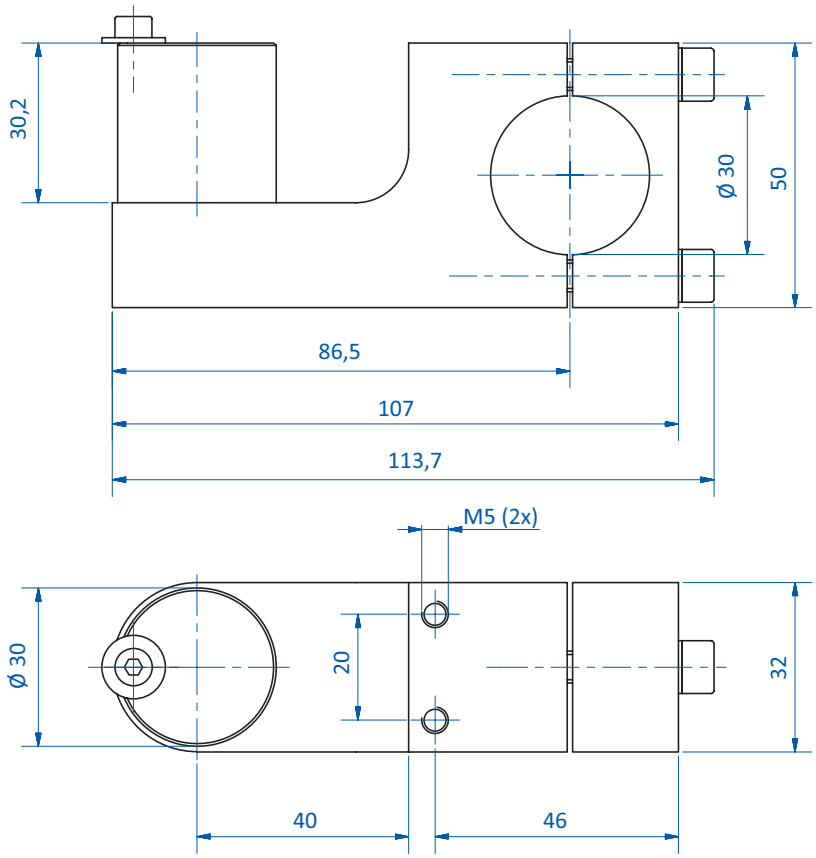

GR02.273

info@hidrafluid.es
976 24 32 10

Elbow arms – spring compensated and non-rotating

Product notes

> Components for mounting grippers, gripper fingers or gripper arms
> Spring compensates for variation in ejection stroke
> Angle adjustment +/- 130°
> Smooth motion due to lubrication-free polymer bearing

Technical data

Item no.	Stroke [mm]	Weight [g]
GR03.160	10	60
GR03.161	20	65
GR03.162	15	125
GR03.163	35	134
GR03.164	20	288
GR03.165	40	310

Dimensions

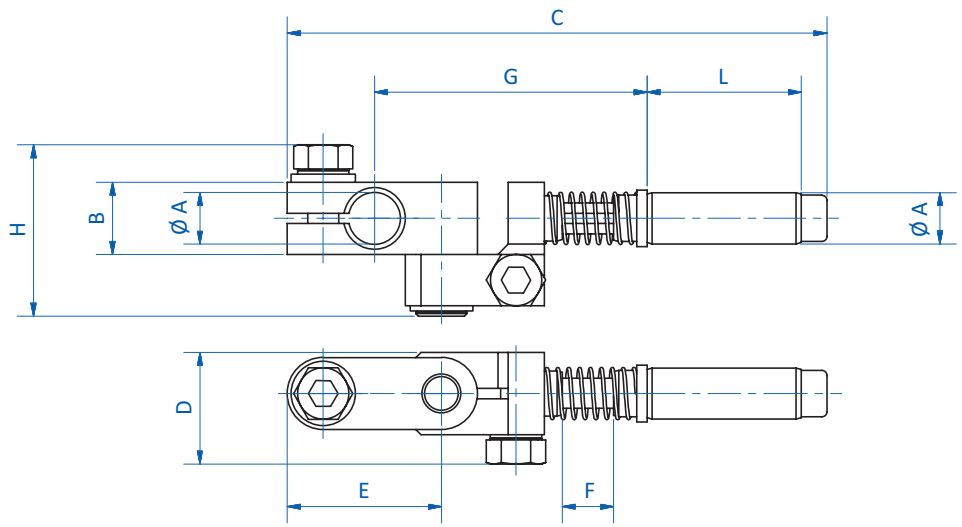

Item no.	Ø A [mm]	B [mm]	C [mm]	D [mm]	E [mm]	F [mm]	G [mm]	H [mm]	L [mm]
GR03.160	10	14	105	21.7	30	10	53	33.3	30
GR03.161	10	14	115	21.7	30	20	63	33.3	30
GR03.162	14	20	133	24.7	37.5	15	69.5	37.7	35
GR03.163	14	20	153	24.7	37.5	35	89.5	37.7	35
GR03.164	20	25	179.5	30.7	52	20	87.5	42.7	55
GR03.165	20	25	199.5	30.7	52	40	107.5	42.7	55

FIPA challenge accepted
info@hidrafluid.es
976 24 32 10

Elbow arms with sliding bush – spring compensated, adjustable and non-rotating

PRECISE FUNCTIONING EVEN UNDER HIGH LOAD

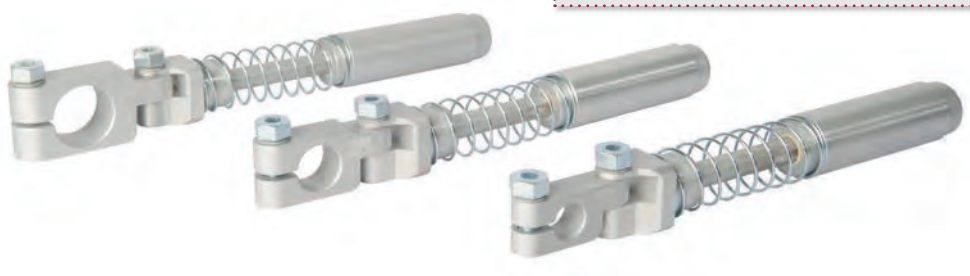

Product notes

> Elements for connecting grippers
> Guiding through sliding bushes for high precision by absorbing lateral forces and moments
> Spring compensates for variation in ejection stroke

Technical data

Item no.	Suitable for grippers with clamping Ø [mm]	Stroke [mm]	Weight [g]
GR03.202	10	40	104
GR03.203	14	40	111
GR03.204	20	40	122

Dimensions

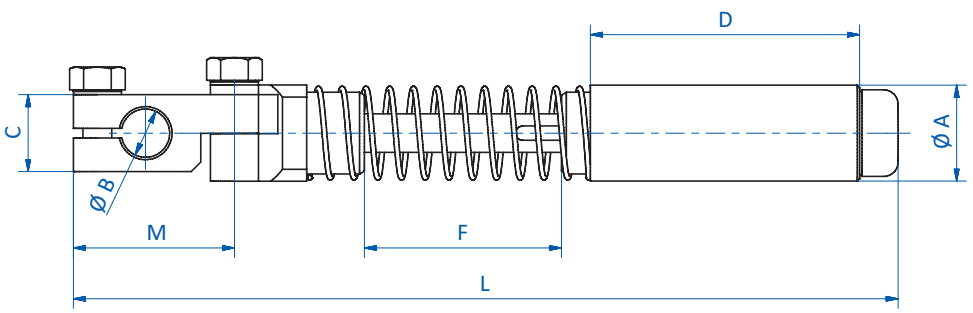

Item no.	Ø A [mm]	Ø B [mm]	C [mm]	D [mm]	F [mm]	L [mm]	M [mm]
GR03.202	20	10	16	55.5	40	171.5	33.5
GR03.203	20	14	20	55.5	40	177.5	39.5
GR03.204	20	20	25	55.5	40	185.5	47.5

info@hidrafluid.es
976 24 32 10

Suction fingers for vacuum cups – rigid

Product notes

> Components for mounting vacuum cups
> Two vacuum ports

Technical data

Item no.	Weight [g]
GR03.001A	11
GR03.002A	16
GR03.003A	22
GR03.010A	27
GR03.011A	39
GR03.012A	49
GR03.036	64
GR03.037	100
GR03.038	137
GR03.039	203

Dimensions

Ø A [mm]	F	G	H	□ B [mm]	E [mm]	C [mm]	L [mm]
10	M5	--	--	12	13	45.5	30
10	M5	--	--	12	13	75	60
10	M5	--	--	12	13	105	90
14	G1/8	--	--	16	20	67.5	45
14	G1/8	--	--	16	20	112.5	90
14	G1/8	--	--	16	20	152.5	130
20	G1/4	G1/8	G1/8	22	23	75.5	50
20	G1/4	G1/8	G1/8	22	23	125	100
20	G1/4	G1/8	G1/8	22	23	175.5	150
30	G1/4	--	G1/4	30	30	230	200

Dimensions

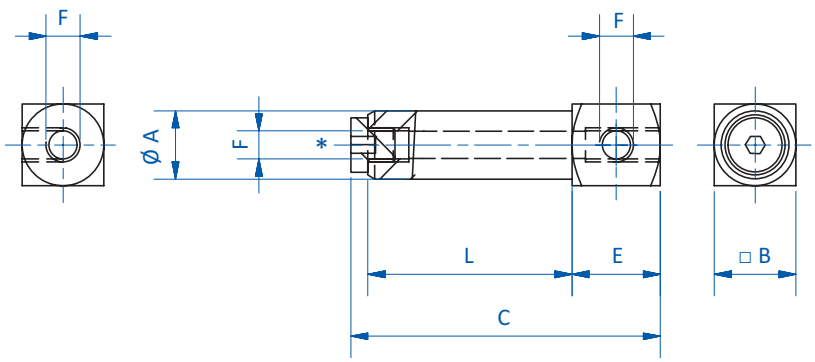

GR03.001A | GR03.002A | GR03.003A | GR03.010A | GR03.011A | GR03.012A

* = Alternative vacuum connection

FIPA challenge accepted

info@hidrafluid.es
976 24 32 10

Dimensions

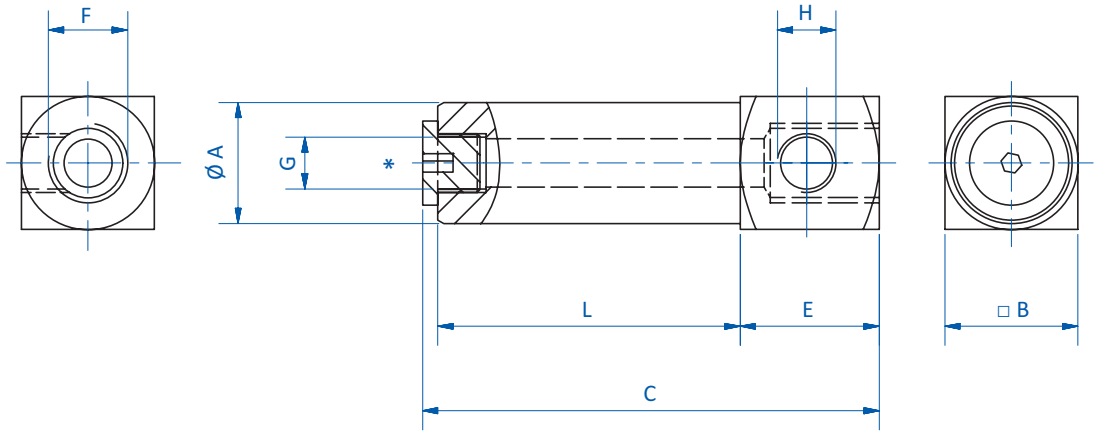

GR03.036 | GR03.037 | GR03.038

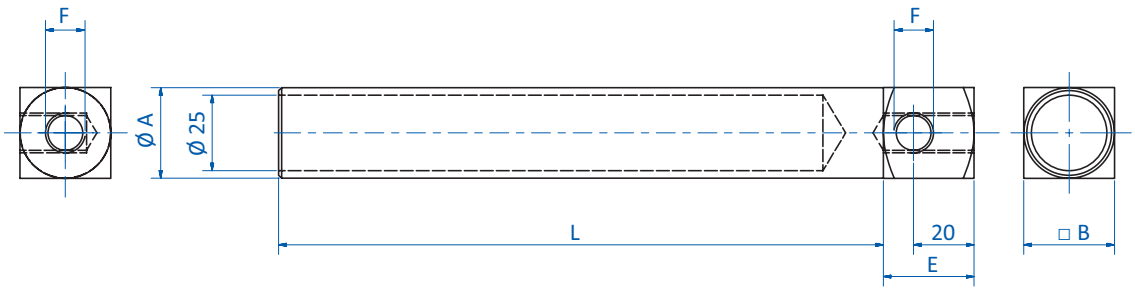

GR03.039

* = Alternative vacuum connection

info@hidrafluid.es
976 24 32 10

Suction fingers for vacuum cups – adjustable

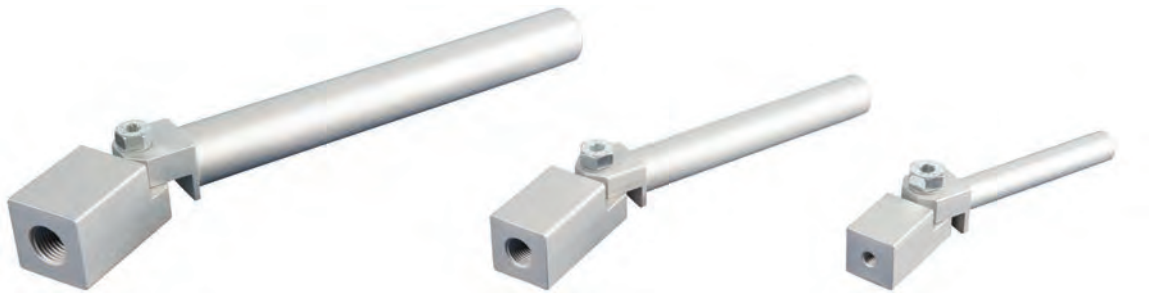

Product notes

> Components for mounting vacuum cups
> Angle adjustment +/- 90°

Technical data

Dimensions

Item no.	Weight [g]	Ø A [mm]	F	□ B [mm]	C [mm]	E [mm]	H [mm]	L [mm]
GR03.040A	35	10	M5	16	66.5	11	21.7	30
GR03.041A	38	10	M5	16	101.5	11	21.7	60
GR03.042A	43	10	M5	16	131.5	11	21.7	90
GR03.050A	58	14	G1/8	20	99	13	23.7	45
GR03.051A	69	14	G1/8	20	144	13	23.7	90
GR03.052A	78	14	G1/8	20	184	13	23.7	130
GR03.070A	72	20	G1/8	20	106	15	25.7	50
GR03.071A	87	20	G1/8	20	156	15	25.7	100
GR03.072A	103	20	G1/8	20	206	15	25.7	150
GR03.073A	93	20	G1/4	25	108	15	28.2	50
GR03.074A	106	20	G1/4	25	158	15	28.2	100
GR03.075A	123	20	G1/4	25	208	15	28.2	150

Dimensions

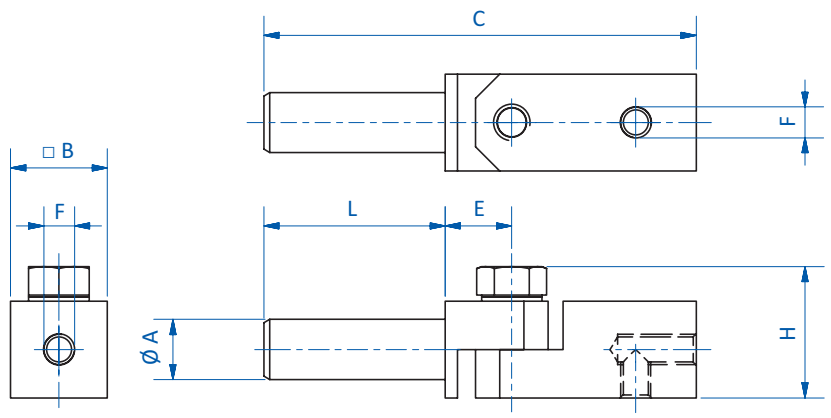

FIPA challenge accepted
info@hidrafluid.es
976 24 32 10

Suction fingers – adjustable

Product notes

> Adjustable head for mounting and aligning vacuum cups with part contours
> Angle adjustment +/- 100°
> Up to 50 % less weight compared to standard version
> Heads are interchangeable with the heads of elbow arms GR02.240 - GR02.242, GR02.250 - GR02.252, GR02.260 - GR02.262

Technical data

Item no.	Weight [g]
GR03.240	15
GR03.241	18
GR03.242	21
GR03.250	29
GR03.251	37
GR03.252	46
GR03.260	57
GR03.261	71
GR03.262	86

Continued on the next page

info@hidrafluid.es
976 24 32 10

Dimensions

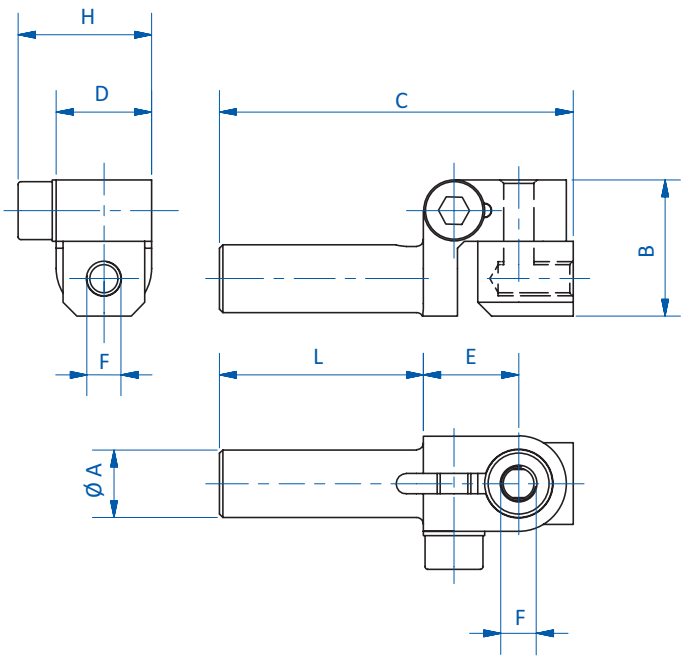

Item no.	Ø **A** [mm]	**F**	**B** [mm]	**C** [mm]	**D** [mm]	**E** [mm]	**H** [mm]	**L** [mm]
GR03.240	10	M5	20	52	14	14	19.6	30
GR03.241	10	M5	20	82	14	14	19.6	60
GR03.242	10	M5	20	112	14	14	19.6	90
GR03.250	14	G1/8	28	71	18	16	23.6	45
GR03.251	14	G1/8	28	116	18	16	23.6	90
GR03.252	14	G1/8	28	156	18	16	23.6	130
GR03.260	20	G1/4	33	82	24	19	29.6	50
GR03.261	20	G1/4	33	132	24	19	29.6	100
GR03.262	20	G1/4	33	182	24	19	29.6	150

FIPA challenge accepted

info@hidrafluid.es
976 24 32 10

Spring compensated gripper arm for vacuum cups

Product notes

> Spring compensates for variation in ejection stroke
> Smooth motion due to lubrication-free polymer bearing
> Only for round vacuum cups

Technical data

Item no.	Stroke [mm]	Weight [g]
GR03.080A	10	18
GR03.081A	20	18
GR03.090A	15	45
GR03.091A	35	48
GR03.114	20	127
GR03.115	40	136

Dimensions

Ø A [mm]	G	H	D	□ B [mm]	C [mm]	E [mm]	F [mm]	L [mm]
10	M5	M5	--	10	67	31.5	10	25
10	M5	M5	--	10	77	41.5	20	25
14	G1/8	G1/8	M5	16	92.5	41.1	15.1	35
14	G1/8	G1/8	M5	16	112.5	61.1	35.1	35
20	G1/8	G1/4	G1/8	20	127.5	50	20	55
20	G1/8	G1/4	G1/8	20	147.5	70	40	55

Dimensions

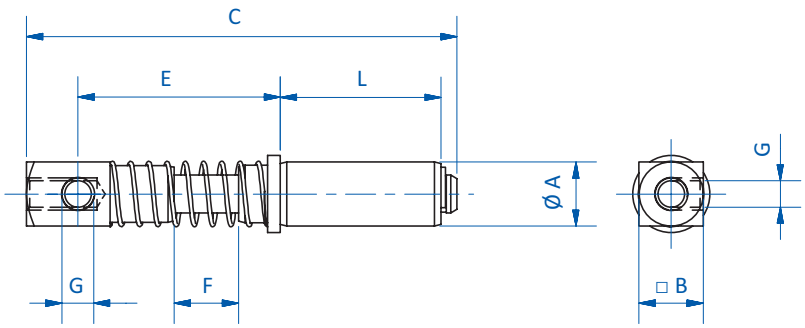

GR03.080A | GR03.081A

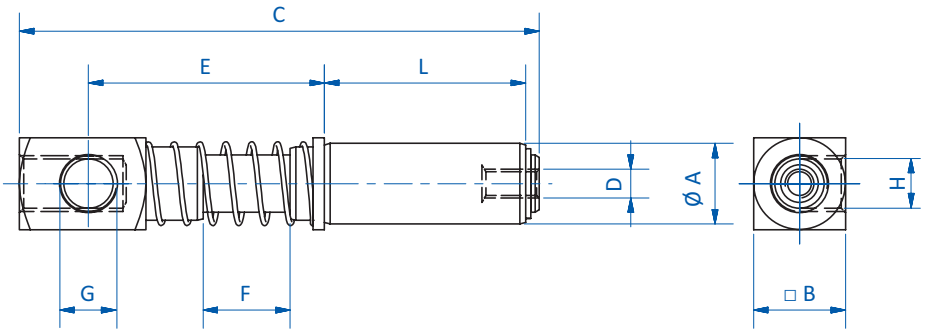

GR03.090A | GR03.091A | GR03.114 | GR03.115

info@hidrafluid.es
976 24 32 10

Spring compensated gripper arm for vacuum cups – non-rotating

Product notes

> Spring compensates for variation in ejection stroke
> Smooth motion due to lubrication-free polymer bearing
> Suitable for round, oval and rectangular vacuum cups
> Lateral vacuum port or at the end

Technical data

Item no.	Stroke [mm]	Weight [g]
GR03.080T	10	17
GR03.081T	20	18
GR03.090T	15	44
GR03.091T	35	48
GR03.114T	20	129
GR03.115T	40	137

Dimensions

Ø A [mm]	G	H	D	□ B [mm]	C [mm]	E [mm]	F [mm]	L [mm]
10	M5	M5	M5	10	75	31.5	10	25
10	M5	M5	M5	10	85	41.5	20	25
14	G1/8	G1/8	M5	16	98.5	41.1	15	35
14	G1/8	G1/8	M5	16	118.5	61	35	35
20	G1/8	G1/4	G1/8	20	137.5	50	20	55
20	G1/8	G1/4	G1/8	20	157	70	40	55

Dimensions

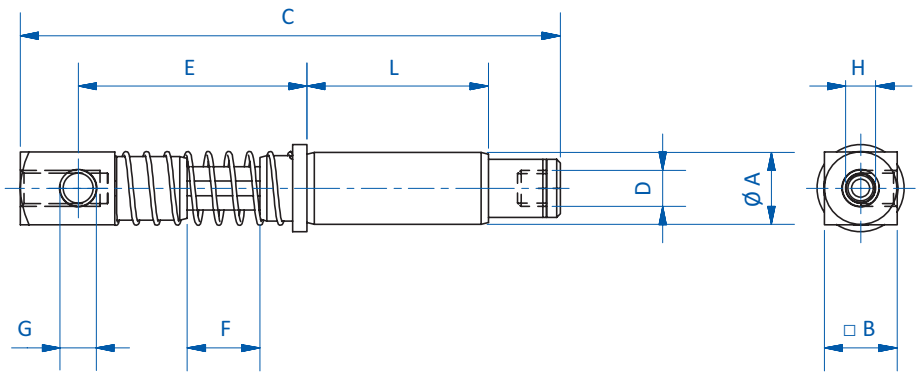

FIPA challenge accepted
info@hidrafluid.es
976 24 32 10

Spring compensated suction fingers for vacuum cups – non-rotating

Product notes

> Adjustable head for mounting and aligning vacuum cups with part contours
> Spring compensates for variation in ejection stroke
> Smooth motion due to lubrication-free polymer bearing
> Angle adjustment +/- 120°

Technical data

Item no.	Stroke [mm]	Weight [g]
GR03.120B	10	35
GR03.121B	20	37
GR03.130B	15	75
GR03.131B	35	84
GR03.152B	20	207
GR03.153B	40	229

Dimensions

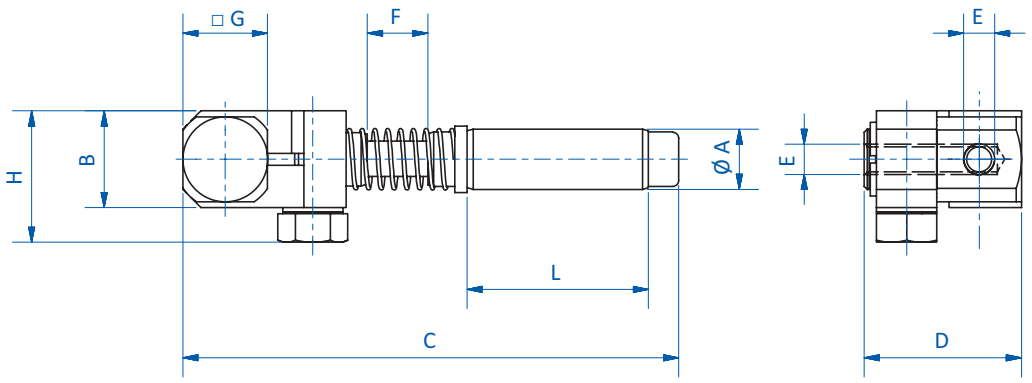

Item no.	Ø A [mm]	E	B [mm]	C [mm]	D [mm]	F [mm]	□ G [mm]	H [mm]	L [mm]
GR03.120B	10	M5	16	82	26	10	14	21.7	30
GR03.121B	10	M5	16	92	26	20	14	21.7	30
GR03.130B	14	G1/8	19	104.5	32.5	15	18	24.7	35
GR03.131B	14	G1/8	19	124.5	32.5	35	18	24.7	35
GR03.152B	20	G1/4	25	139.5	37.5	20	24	30.7	55
GR03.153B	20	G1/4	25	159.5	37.5	40	24	30.7	55

info@hidrafluid.es
976 24 32 10

Notes:

FIPA challenge accepted

info@hidrafluid.es
976 24 32 10

Vacuum cups at a glance 122

Vacuum cups for demolding 124

Further industry solutions 153

Suspensions 154

info@hidrafluid.es
976 24 32 10

FIPA Vacuum cups for demolding

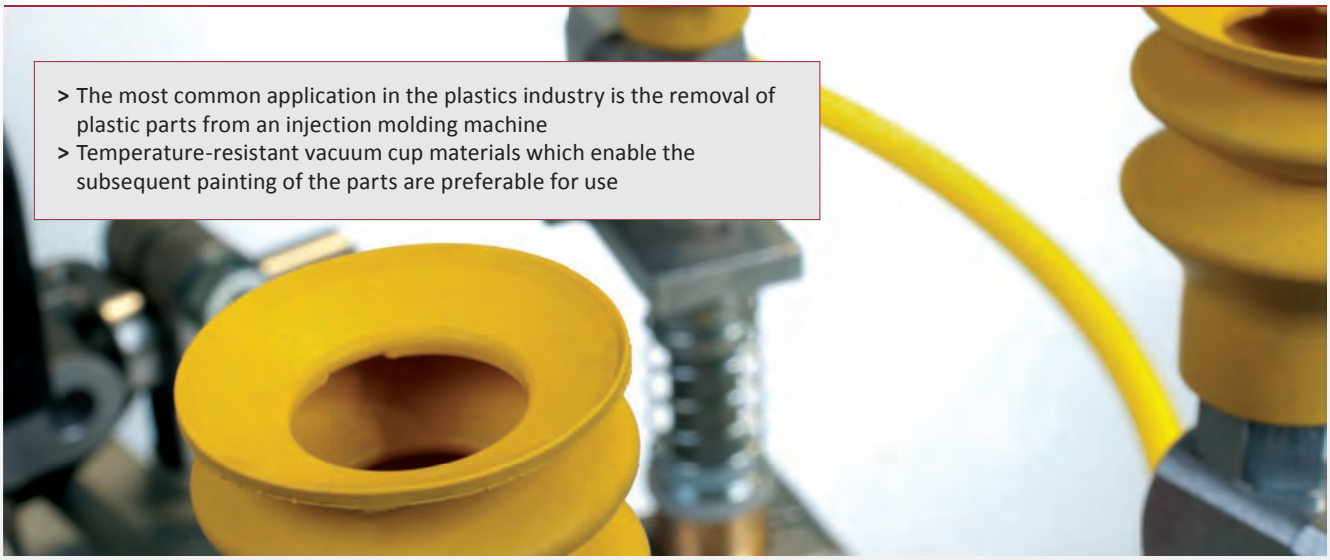

> The most common application in the plastics industry is the removal of plastic parts from an injection molding machine
> Temperature-resistant vacuum cup materials which enable the subsequent painting of the parts are preferable for use

Thermalon® vacuum cups

> Optimized material for low marking
> Heat-resistant up to 160 °C
> No silicones or other adhesive-repelling substances, enabling later painting of the products

Bellows vacuum cups, 1.5 folds – SKT-B1
> Good adaptation to uneven product surfaces
> Diameter: 11 - 63 mm

Bellows vacuum cups, 2.5 folds – SKT-B2
> Very good adaptation to uneven product surfaces
> Large range of height and angle adjustment
> Particularly gentle placement on product surfaces
> Diameter: 5 - 62 mm

Flat vacuum cups – SKT-F
> Flat vacuum cups with a flexible single sealing lip
> Low internal volume saves energy
> Diameter: 5 - 60 mm

Oval vacuum cups – SKH-O
> Oval-shaped flat vacuum cups for the handling of narrow products
> Narrow width enables the gripping of ribbed surfaces
> Significantly greater suction power than round vacuum cups of equal width
> Dimensions: 4x2 - 45x15 mm

> See page 124

info@hidrafluid.es
976 24 32 10

FIPA Vacuum cups for demolding

HNBR vacuum cups – SKH-B1, SKH-B2 and SKH-O

Bellows cups 1.5 and 2.5 folds, flat vacuum cups and oval vacuum cups

> Standard material for removing hot plastic parts from an injection molding machine
> Heat-resistant up to 160 °C
> No silicones or other adhesive-repelling substances, enabling later painting of the products
> Low-marking
> Wear-resistant material
> Good adaptation to uneven product surfaces
> Diameter: 5 - 60 mm

> See page 132

Varioflex® bellows cups, 1.5 and 2.5 folds – SP-BX

> Excellent service life and superior retention force
> Special polyurethane in two degrees of hardness (60° Shore A black, 30° Shore A red)
> Soft lip for optimal sealing
> Short cycle times and high process reliability
> Operating temperature: 10 - 50 °C
> Low-marking

1.5 folds – SP-BX1

> Good adaptation to uneven product surfaces
> Supports (Ø 20–75 mm) stabilise the product
> Diameter: 15 - 75 mm

2.5 folds – SP-BX2

> Excellent adaptation to uneven product surfaces
> Large range of height and angle adjustment
> Diameter: 15 - 75 mm

> See page 138

Flat silicone vacuum cups with curved lip – SFU-D

> Universal flat vacuum cups with tapering curved sealing lip
> Pre-tension of the sealing lip enables gripping of uneven, slightly curved products
> Diameter: 4 - 85 mm

> See page 144

Bellows silicone vacuum cups, universal – SBU 1 and SBU 2

1.5 and 2.5 folds

> Universal bellows vacuum cups for handling sensitive or uneven products
> Bellows compensates for differences in height and enables good adaptation to curved or uneven product surfaces
> Diameter: 4 - 88 mm

> See page 147

For the full range of vacuum cups please refer to the FIPA Vacuum Technology Catalog or our website www.fipa.com.

info@hidrafluid.es
976 24 32 10

High-temperature Thermalon® cups – SKT-F

UP TO 160 °C (320 °F) & MINIMUM MARKING

Product notes

Flat vacuum cups for smooth surfaces especially suitable for removing hot plastic parts to be painted from an injection molding machine.
Thermalon® is a material mixture specially optimized for the plastics industry with a hardness of 60° Shore A.
Connection up to Ø 50 mm by means of plug-in nipple, from Ø 60 mm with vulcanized carrier plate (boltable).

Advantage

> Extremely low-marking
> Free of silicone and other paint-wetting-impairment substances (PWIS)
> Great stability allows high acceleration

Technical data

Item no.	Model / Lip dimensions		Material / Color	Usage temperature [°C (°F)]
102.005.496.19	SKT-F-5	0.9	Thermalon® (bl)	0 - 160 (32 - 320)
102.008.497.19	SKT-F-8	1.3	Thermalon® (bl)	0 - 160 (32 - 320)
102.010.498.19	SKT-F-10	1.5	Thermalon® (bl)	0 - 160 (32 - 320)
102.015.499.19	SKT-F-15	1.9	Thermalon® (bl)	0 - 160 (32 - 320)
102.020.500.19	SKT-F-20	2.3	Thermalon® (bl)	0 - 160 (32 - 320)
102.025.501.19	SKT-F-25	3	Thermalon® (bl)	0 - 160 (32 - 320)
102.030.502.19	SKT-F-30	2	Thermalon® (bl)	0 - 160 (32 - 320)
102.040.503.19	SKT-F-40	3.9	Thermalon® (bl)	0 - 160 (32 - 320)
102.050.504.19	SKT-F-50	4	Thermalon® (bl)	0 - 160 (32 - 320)
102.060.505.19	SKT-F-60	4.9	Thermalon® (bl)	0 - 160 (32 - 320)

Accessories

	Suitable fittings							Suitable suspensions (Snap-in)	
Item no.	M5-male	M5-female	M6-male	G1/8-male	G1/8-female	G1/4-male	G1/4-female	Suspen-sions	
102.005.496.19	270.010	270.005	--	270.009	270.007	--	--	50.330	9
102.008.497.19	270.010	270.005	--	270.009	270.007	--	--	50.330	9
102.010.498.19	270.010	270.005	--	270.009	270.007	--	--	50.330	9
102.015.499.19	270.200	--	--	270.064	270.065	--	--	50.330	9
102.020.500.19	270.311	--	--	270.063	270.061	--	--	--	--
102.025.501.19	--	--	270.312/19	270.030	270.019	270.274	270.275	--	--
102.030.502.19	--	--	270.312/19	270.030	270.019	270.274	270.275	--	--
102.040.503.19	--	--	270.312/19	270.030	270.019	270.274	270.275	--	--
102.050.504.19	--	--	--	270.012	270.020	270.491	270.492	--	--
102.060.505.19	--	--	--	--	--	--	--	--	--

FIPA challenge accepted
info@hidrafluid.es
976 24 32 10

Dimensions

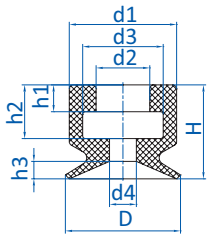

Drawing A

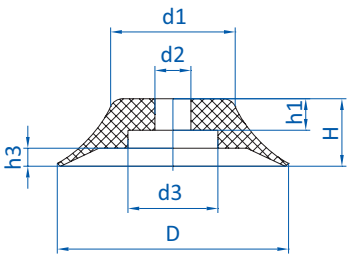

Drawing B

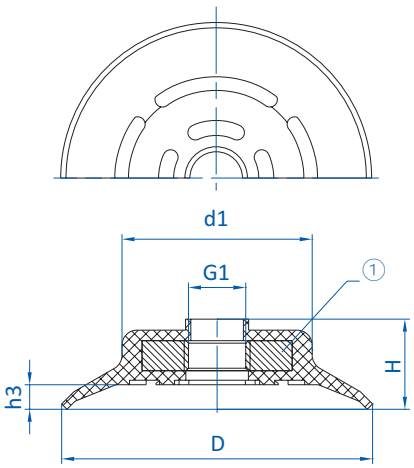

Drawing C

① = Aluminum

Item no.	Drawing	Ø **D** [mm]	Ø **d1** [mm]	Ø **d2** [mm]	Ø **d3** [mm]	Ø **d4** [mm]	**G1**	**H** [mm]	**h1** [mm]	**h2** [mm]	**h3** [mm]
102.005.496.19	A	5.5	7.5	4	6	1.5	--	6.5	2	4	0.9
102.008.497.19	A	8.5	8	4	6	2	--	7	2	4	1.3
102.010.498.19	A	11	8.5	4	6	2	--	7.5	2	4	1.4
102.015.499.19	B	15.5	12	4.5	8	--	--	8	2.7	--	1.8
102.020.500.19	B	21	15	4.5	11	--	--	10	4.5	--	2.2
102.025.501.19	B	26	16	6	11	--	--	14	7	--	2.8
102.030.502.19	B	31	14.5	6	11	--	--	12	7	--	2
102.040.503.19	B	41	24	6	11	--	--	14	7	--	3.9
102.050.504.19	B	51	27.5	8	20	--	--	15	7	--	4
102.060.505.19	C	62	38	--	30	--	G1/4	18	--	--	5

info@hidrafluid.es
976 24 32 10

High-temperature Thermalon® bellows cups, 1.5 folds – SKT-B1

UP TO 160 °C (320 °F) & MINIMUM MARKING

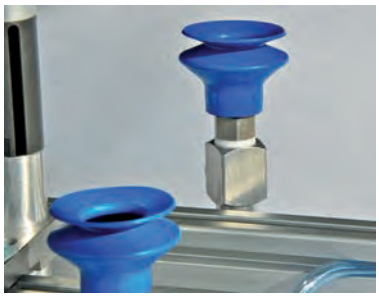

Product notes

Bellows vacuum cups for uneven surfaces especially suited for removing hot plastic parts to be painted from an injection molding machine. Thermalon® is a material mixture specially optimized for the plastics industry with a hardness of 60° Shore A.
Connection via plug-in nipple.

Advantage

> Extremely low-marking
> Free of silicone and other paint-wetting-impairment substances (PWIS)
> Bellows compensate differences in height and enable good adaptation to curved or uneven product surfaces

Technical data

Item no.	Model / Lip dimensions		Number of folds	Material / Color	Short-term working temperature < 30 Sec [°C (°F)]
23.011.234.19	SKT-B1-11	5.5	1.5	Thermalon® (bl)	0 - 160 (32 - 320)
23.014.235.19	SKT-B1-14	5	1.5	Thermalon® (bl)	0 - 160 (32 - 320)
23.016.236.19	SKT-B1-16	8.5	1.5	Thermalon® (bl)	0 - 160 (32 - 320)
23.018.237.19	SKT-B1-18	5	1.5	Thermalon® (bl)	0 - 160 (32 - 320)
23.020.238.19	SKT-B1-20	5	1.5	Thermalon® (bl)	0 - 160 (32 - 320)
23.022.239.19	SKT-B1-22	8	1.5	Thermalon® (bl)	0 - 160 (32 - 320)
23.025.240.19	SKT-B1-25	12	1.5	Thermalon® (bl)	0 - 160 (32 - 320)
23.033.241.19	SKT-B1-33	11	1.5	Thermalon® (bl)	0 - 160 (32 - 320)
23.043.242.19	SKT-B1-43	12.5	1.5	Thermalon® (bl)	0 - 160 (32 - 320)
23.053.243.19	SKT-B1-53	15	1.5	Thermalon® (bl)	0 - 160 (32 - 320)
23.063.244.19	SKT-B1-63	15	1.5	Thermalon® (bl)	0 - 160 (32 - 320)

Accessories

	Suitable fittings						
Item no.	M5-male	M5-female	M6-male	G1/8-male	G1/8-female	G1/4-male	G1/4-female
23.011.234.19	270.134	270.347	270.104	270.033	270.478	--	--
23.014.235.19	270.134	270.347	270.104	270.033	270.478	--	--
23.016.236.19	270.134	270.347	270.104	270.033	270.478	--	--
23.018.237.19	270.134	270.347	270.104	270.033	270.478	--	--
23.020.238.19	270.134	270.347	270.104	270.033	270.478	--	--
23.022.239.19	270.134	270.347	270.104	270.033	270.478	--	--
23.025.240.19	270.134	270.347	270.104	270.033	270.478	--	--
23.033.241.19	--	--	270.315	270.196	270.114	270.190	270.192
23.043.242.19	--	--	270.315	270.196	270.114	270.190	270.192
23.053.243.19	--	--	270.315	270.196	270.114	270.190	270.192

FIPA challenge accepted
info@hidrafluid.es
976 24 32 10

Accessories

Item no.	Suitable fittings						
	M5-male	M5-female	M6-male	G1/8-male	G1/8-female	G1/4-male	G1/4-female
23.063.244.19	--	--	270.315	270.196	270.114	270.190	270.192

Dimensions

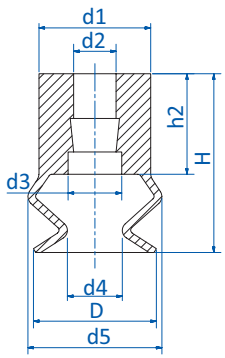

Drawing A

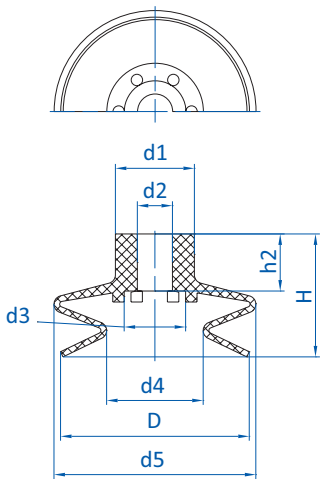

Drawing B

Item no.	Drawing	Ø **D** [mm]	Ø **d1** [mm]	Ø **d2** [mm]	Ø **d3** [mm]	Ø **d4** [mm]	Ø **d5** [mm]	**H** [mm]	**h2** [mm]
23.011.234.19	A	11	10	3.8	4.8	5	12	16	9
23.014.235.19	A	13	10	3.8	4.8	5	14	16	9
23.016.236.19	A	16	10	3.8	4.8	8	17.5	19	9
23.018.237.19	A	18	10	3.8	4.8	8	18	16.5	9
23.020.238.19	A	19	10	3.8	4.8	10.5	20	16	9
23.022.239.19	A	22	10	3.8	4.8	11	24	19	9
23.025.240.19	A	24	10	3.8	4.8	9.5	25	23	9
23.033.241.19	B	33	18	8	14	17	36	28	13
23.043.242.19	B	43	18	8	14	22	46	28	13
23.053.243.19	B	53	18	8	14	33	59	34	13
23.063.244.19	B	63	18	8	14	44	67	34	13

info@hidrafluid.es
976 24 32 10

High-temperature Thermalon® bellows cups, 2.5 folds – SKT-B2

UP TO 160 °C (320 °F) & MINIMUM MARKING

Product notes

Bellows vacuum cups for uneven surfaces especially suited for removing hot plastic parts to be painted from an injection molding machine.
Thermalon® is a material mixture specially optimized for the plastics industry with a hardness of 60° Shore A.
Connection via plug-in nipple.

Advantage

> Extremely low-marking
> Free of silicone and other paint-wetting-impairment substances (PWIS)
> Long vacuum cup stroke and good adaptation to curved or uneven product surfaces

Technical data

Item no.	Model / Lip dimensions		Material / Color	Number of folds	Short-term working temperature < 30 Sec [°C (°F)]
21.005.146.19	SKT-B2-5	3	Thermalon® (bl)	2.5	0 - 160 (32 - 320)
21.007.147.19	SKT-B2-7	3	Thermalon® (bl)	2.5	0 - 160 (32 - 320)
21.009.148.19	SKT-B2-9	3	Thermalon® (bl)	2.5	0 - 160 (32 - 320)
21.012.149.19	SKT-B2-12	7	Thermalon® (bl)	2.5	0 - 160 (32 - 320)
21.014.150.19	SKT-B2-14	10	Thermalon® (bl)	2.5	0 - 160 (32 - 320)
21.018.151.19	SKT-B2-18	10	Thermalon® (bl)	2.5	0 - 160 (32 - 320)
21.020.152.19	SKT-B2-20	10	Thermalon® (bl)	2.5	0 - 160 (32 - 320)
21.025.153.19	SKT-B2-25	20	Thermalon® (bl)	2.5	0 - 160 (32 - 320)
21.032.154.19	SKT-B2-32	14.5	Thermalon® (bl)	2.5	0 - 160 (32 - 320)
21.042.155.19	SKT-B2-42	22	Thermalon® (bl)	2.5	0 - 160 (32 - 320)
21.052.156.19	SKT-B2-52	27	Thermalon® (bl)	2.5	0 - 160 (32 - 320)
21.062.157.19	SKT-B2-62	31	Thermalon® (bl)	2.5	0 - 160 (32 - 320)

Accessories

	Suitable fittings						
Item no.	M5-male	M5-female	M6-male	G1/8-male	G1/8-female	G1/4-male	G1/4-female
21.005.146.19	270.134	270.347	270.104	270.033	270.478	--	--
21.007.147.19	270.134	270.347	270.104	270.033	270.478	--	--
21.009.148.19	270.134	270.347	270.104	270.033	270.478	--	--
21.012.149.19	270.134	270.347	270.104	270.033	270.478	--	--
21.014.150.19	270.134	270.347	270.104	270.033	270.478	--	--
21.018.151.19	270.134	270.347	270.104	270.033	270.478	--	--
21.020.152.19	270.134	270.347	270.104	270.033	270.478	--	--
21.025.153.19	270.134	270.347	270.104	270.033	270.478	--	--
21.032.154.19	--	--	270.315	270.196	270.114	270.190	270.192
21.042.155.19	--	--	270.315	270.196	270.114	270.190	270.192
21.052.156.19	--	--	270.315	270.196	270.114	270.190	270.192
21.062.157.19	--	--	270.315	270.196	270.114	270.190	270.192

FIPA challenge accepted

info@hidrafluid.es
976 24 32 10

Dimensions

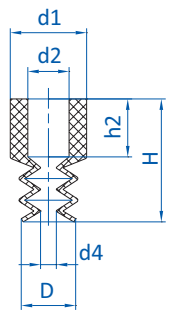

Drawing A

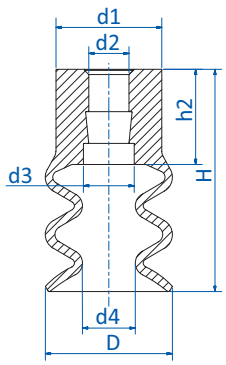

Drawing B

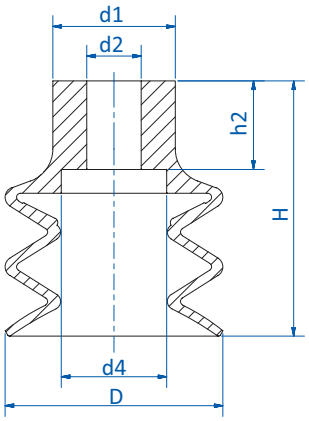

Drawing C

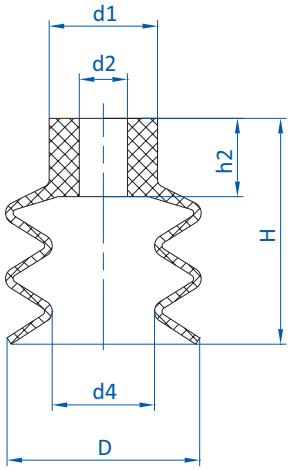

Drawing D

Item no.	Drawing	Ø **D** [mm]	Ø **d1** [mm]	Ø **d2** [mm]	Ø **d4** [mm]	**H** [mm]	**h2** [mm]
21.005.146.19	A	5.5	7	4	2.2	13.5	8
21.007.147.19	A	6	9	4.5	1.8	14	6.5
21.009.148.19	A	9.5	9	4.4	4	15	7.5
21.012.149.19	B	12	10	3.8	5	21	9
21.014.150.19	B	14	10	3.8	5	23	9
21.018.151.19	B	17.5	10	3.8	7.5	23	9
21.020.152.19	B	20	10	3.8	10	23	9
21.025.153.19	B	25	10	3.8	10	34	9
21.032.154.19	C	32	18	8	17	38	13
21.042.155.19	C	42	18	8	18.5	46	13
21.052.156.19	D	52	18	8	25	49	13
21.062.157.19	D	62	18	8	30	55	13

info@hidrafluid.es
976 24 32 10

High-temperature Thermalon® oval cups – SKT-O

UP TO 160 °C (320 °F) & MINIMUM MARKING

Product notes

Oval vacuum cups for smooth surfaces suitable for removing hot plastic parts to be painted from an injection molding machine.
Thermalon® is a material mixture specially optimized for the plastics industry with a hardness of 60° Shore A.
Connection via plug-in nipple.

Advantage

> Extremely low-marking
> Free of silicone and other paint-wetting-impairment substances (PWIS)
> Significantly increased suction force compared to round vacuum cups of the same width
> Soft sealing lip also allows adhesion to curved products

Ordering notes

From size 24x8 mm upward, a gripper clamp (available separately) is recommended to prevent inadvertent rotation.

Technical data

Item no.	Model / Lip dimensions		Material / Color	Lip dimensions	Usage temperature [°C (°F)]
132.4x2.079.19	SKT-O-4x2	0.4	Thermalon® (bl)	4x2	0 - 160 (32 - 320)
132.7x4.080.19	SKT-O-7x4	0.5	Thermalon® (bl)	7x4	0 - 160 (32 - 320)
132.15x5.081.19	SKT-O-15x5	0.6	Thermalon® (bl)	15x5	0 - 160 (32 - 320)
132.18x6.082.19	SKT-O-18x6	1	Thermalon® (bl)	18x6	0 - 160 (32 - 320)
132.24x8.083.19	SKT-O-24x8	1	Thermalon® (bl)	24x8	0 - 160 (32 - 320)
132.30x10.084.19	SKT-O-30x10	1	Thermalon® (bl)	30x10	0 - 160 (32 - 320)
132.45x15.085.19	SKT-O-45x15	2	Thermalon® (bl)	45x15	0 - 160 (32 - 320)
132.60x20.086.19	SKT-O-60x20	2.5	Thermalon® (bl)	60x20	0 - 160 (32 - 320)
132.75x25.087.19	SKT-O-75x25	2.5	Thermalon® (bl)	75x25	0 - 160 (32 - 320)

Accessories

Clamp
--
--
--
--
78.032
78.032
78.033
78.033
78.034

Accessories

	Suitable fittings						
Item no.	M3-male	M4-male	M5-male	G1/8-male	G1/8-female	G1/4-male	G1/4-female
132.4x2.079.19	270.014	270.111	270.300	--	--	--	--
132.7x4.080.19	270.014	270.111	270.300	--	--	--	--
132.15x5.081.19	--	--	270.094	270.095	270.096	--	--
132.18x6.082.19	--	--	270.094	270.095	270.096	--	--
132.24x8.083.19	--	--	270.094	270.095	270.096	--	--
132.30x10.084.19	--	--	270.094	270.095	270.096	--	--
132.45x15.085.19	--	--	--	--	--	270.097	270.098
132.60x20.086.19	--	--	--	--	--	270.097	270.098
132.75x25.087.19	--	--	--	--	--	270.097	270.098

FIPA challenge accepted
info@hidrafluid.es
976 24 32 10

Dimensions

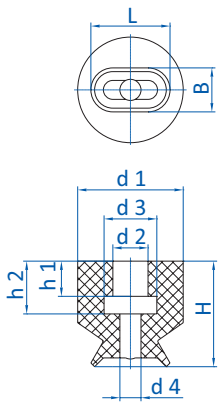

Drawing A

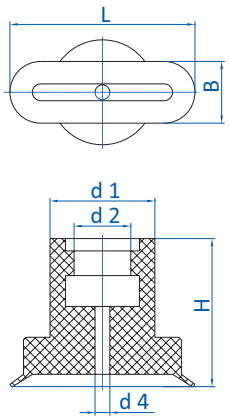

Drawing B

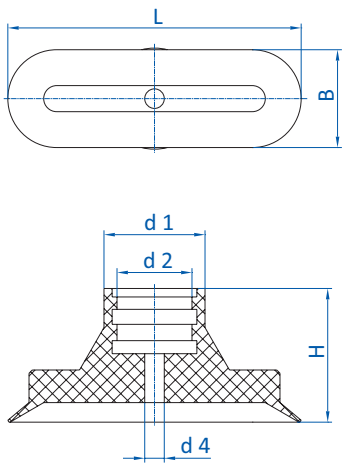

Drawing C

Item no.	Drawing	L [mm]	B [mm]	Ø d1 [mm]	Ø d2 [mm]	Ø d3 [mm]	Ø d4 [mm]	H [mm]
132.4x2.079.19	A	4.5	2.5	6	2	3	1.2	6
132.7x4.080.19	A	7	3.5	6	2	3	1.4	6
132.15x5.081.19	B	15	5	8.5	4.6	--	1.2	12
132.18x6.082.19	B	18	6	8.5	4.6	--	1.5	12
132.24x8.083.19	B	24	8	11.5	5.5	--	1.5	12
132.30x10.084.19	B	30	10	11.5	5.5	--	2.5	12
132.45x15.085.19	C	45	15	15.5	11.5	--	3	21
132.60x20.086.19	C	60	20	15.5	11.5	--	4	21
132.75x25.087.19	C	75	25	17.5	11.5	--	4	21

info@hidrafluid.es
976 24 32 10

High-temperature HNBR bellows cups, 1.5 folds – SKH-B1

UP TO 160 °C (320 °F) & MINIMUM MARKING

Product notes

Bellows vacuum cups for uneven surfaces with suitability for removing hot plastic parts to be painted from an injection molding machine.

Advantage

> Free of silicone and other paint-wetting-impairment substances (PWIS)
> Minimum marking
> Bellows compensate differences in height and enable good adaptation to curved or uneven product surfaces

Technical data

Item no.	Model / Lip dimensions		Number of folds	Material / Color	Usage temperature [°C (°F)]
23.005.178.14	SKH-B1-5	2	1.5	HNBR (ge)	0 - 160 (32 - 320)
23.008.166.14	SKH-B1-8	3.5	1.5	HNBR (ge)	0 - 160 (32 - 320)
23.011.008.14/2	SKH-B1-11	4.5	1.5	HNBR (ge)	0 - 160 (32 - 320)
23.015.122.14	SKH-B1-15	5	1.5	HNBR (ge)	0 - 160 (32 - 320)
23.016.016.14/2	SKH-B1-16	6	1.5	HNBR (ge)	0 - 160 (32 - 320)
23.020.124.14/2	SKH-B1-20	8	1.5	HNBR (ge)	0 - 160 (32 - 320)
23.030.125.14	SKH-B1-30	9	1.5	HNBR (ge)	0 - 160 (32 - 320)
23.043.096.14	SKH-B1-43	12	1.5	HNBR (ge)	0 - 160 (32 - 320)

Accessories

	Suitable fittings						
Item no.	M5-male	M5-female	M6-male	G1/8-male	G1/8-female	G1/4-male	G1/4-female
23.005.178.14	270.153	--	--	--	--	--	--
23.008.166.14	270.153	--	--	--	--	--	--
23.011.008.14/2	270.013	270.005	270.103	270.003	270.015	--	--
23.015.122.14	270.010	270.005	--	270.009	270.007	--	--
23.016.016.14/2	270.013	270.005	270.103	270.003	270.015	--	--
23.020.124.14/2	270.311	--	--	270.063	270.061	--	--
23.030.125.14	--	--	270.312/19	270.030	270.019	270.274	270.275
23.043.096.14	--	--	270.315	270.196	270.114	270.190	270.192

FIPA challenge accepted
info@hidrafluid.es
976 24 32 10

Dimensions

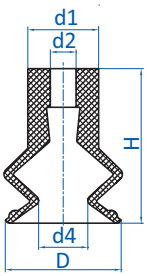

Drawing A

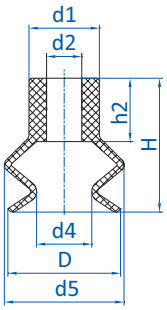

Drawing B

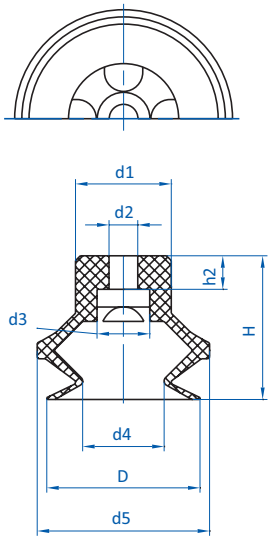

Drawing C

Item no.	Drawing	Ø **D** [mm]	Ø **d1** [mm]	Ø **d2** [mm]	Ø **d3** [mm]	Ø **d4** [mm]	Ø **d5** [mm]	**H** [mm]	**h2** [mm]
23.005.178.14	A	6	5	2	--	2.2	--	9	--
23.008.166.14	A	9	5.5	2	--	3.8	--	12	--
23.011.008.14/2	B	12	10	5	--	4.5	12	16	9
23.015.122.14	C	15	8.5	3.6	6	8	17	16	1.7
23.016.016.14/2	B	16	10	5	--	8	17	19	9
23.020.124.14/2	C	21.5	15	4.5	11	10	23.5	20	4.6
23.030.125.14	C	32	20	6	11	17	36	30	7
23.043.096.14	B	43	18	8	--	23	45	27	12

info@hidrafluid.es
976 24 32 10

High-temperature HNBR bellows cups, 2.5 folds – SKH-B2

UP TO 160 °C (320 °F) & MINIMUM MARKING

Product notes

Bellows vacuum cups for uneven surfaces with suitability for removing hot plastic parts to be painted from an injection molding machine. Connection via plug-in nipple.

Advantage

> Free of silicone and other paint-wetting-impairment substances (PWIS)
> Minimum marking
> Long vacuum cup stroke and good adaptation to curved or uneven product surfaces

Technical data

Item no.	Model / Lip dimensions		Number of folds	Material / Color	Usage temperature [°C (°F)]
21.005.057.14	SKH-B2-5	3	2.5	HNBR (ge)	0 - 160 (32 - 320)
21.007.089.14	SKH-B2-7	3	2.5	HNBR (ge)	0 - 160 (32 - 320)
21.009.002.14	SKH-B2-9	2	2.5	HNBR (ge)	0 - 160 (32 - 320)
21.012.135.14	SKH-B2-12	7	2.5	HNBR (ge)	0 - 160 (32 - 320)
21.014.053.14	SKH-B2-14	9	2.5	HNBR (ge)	0 - 160 (32 - 320)
21.018.010.14	SKH-B2-18	8	2.5	HNBR (ge)	0 - 160 (32 - 320)
21.020.016.14/2	SKH-B2-20	9	2.5	HNBR (ge)	0 - 160 (32 - 320)
21.032.075.14/3	SKH-B2-32	13	2.5	HNBR (ge)	0 - 160 (32 - 320)
21.043.049.14	SKH-B2-43	19	2.5	HNBR (ge)	0 - 160 (32 - 320)
21.060.051.14	SKH-B2-60	25	2.5	HNBR (ge)	0 - 160 (32 - 320)

Accessories

	Suitable fittings						
Item no.	M5-male	M5-female	M6-male	G1/8-male	G1/8-female	G1/4-male	G1/4-female
21.005.057.14	270.134	270.347	270.104	270.033	270.478	--	--
21.007.089.14	270.010	270.005	--	270.009	270.007	--	--
21.009.002.14	270.013	270.005	270.103	270.003	270.015	--	--
21.012.135.14	270.013	270.005	270.103	270.003	270.015	--	--
21.014.053.14	270.134	270.347	270.104	270.033	270.478	--	--
21.018.010.14	270.013	270.005	270.103	270.003	270.015	--	--
21.020.016.14/2	270.013	270.005	270.103	270.003	270.015	270.194	--
21.032.075.14/3	--	--	270.315	270.196	270.114	270.190	270.192
21.043.049.14	--	--	270.315	270.196	270.114	270.190	270.192
21.060.051.14	--	--	270.315	--	--	270.540	270.539

FIPA challenge accepted
info@hidrafluid.es
976 24 32 10

Dimensions

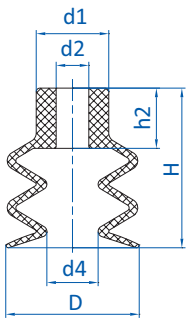

Drawing A

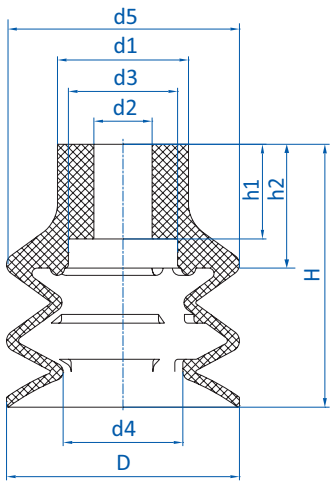

Drawing B

Item no.	Drawing	Ø **D** [mm]	Ø **d1** [mm]	Ø **d2** [mm]	Ø **d3** [mm]	Ø **d4** [mm]	Ø **d5** [mm]	**H** [mm]	**h1** [mm]	**h2** [mm]
21.005.057.14	A	5.5	7	4	--	2.5	--	14	--	8.5
21.007.089.14	B	7	7.5	4	5.5	3	7	10	2	3.5
21.009.002.14	A	9	9	5	--	4	--	15	--	7
21.012.135.14	A	12	10	5	--	5	--	21	--	9
21.014.053.14	A	14	8	4	--	5.5	--	18	--	5.5
21.018.010.14	A	18	10	4.5	--	7	--	22	--	8.5
21.020.016.14/2	A	20	10	4.5	--	10	--	23	--	9
21.032.075.14/3	B	32	18	8	15	16.5	32	36	13	--
21.043.049.14	B	42	20	8	15	15.5	42	46	13	17
21.060.051.14	B	61	22	8	14	28	61	57	14	18.5

info@hidrafluid.es
976 24 32 10

High-temperature HNBR oval cups – SKH-O

UP TO 160 °C (320 °F) & MINIMUM MARKING

Product notes

Oval vacuum cups for smooth surfaces suitable for removing hot plastic parts to be painted from an injection molding machine.
Connection via plug-in nipple.

Advantage

> Free of silicone and other paint-wetting-impairment substances (PWIS)
> Minimum marking
> Significantly increased suction force compared to round vacuum cups of the same width
> Soft sealing lip also allows adhesion to curved products

Ordering notes

From size 15x5 mm upward, a gripper clamp (available separately) is recommended to prevent inadvertent rotation

Technical data

Item no.	Model / Lip dimensions		Material / Color	Usage temperature [°C (°F)]
132.4x2.031.14	SKH-O-4x2A	0.5	HNBR (ge)	0 - 160 (32 - 320)
132.7x4.034.14	SKH-O-7x4	0.8	HNBR (ge)	0 - 160 (32 - 320)
132.15x5.067.14	SKH-O-15x5	1	HNBR (ge)	0 - 160 (32 - 320)
132.24x8.066.14	SKH-O-24x8	1	HNBR (ge)	0 - 160 (32 - 320)
132.36x12.068.14	SKH-O-36x12	2	HNBR (ge)	0 - 160 (32 - 320)
132.45x15.064.14	SKH-O-45x15	3	HNBR (ge)	0 - 160 (32 - 320)

Accessories

Item no.	Clamp
132.4x2.031.14	--
132.7x4.034.14	--
132.15x5.067.14	78.030
132.24x8.066.14	78.032
132.36x12.068.14	78.032
132.45x15.064.14	78.033

Accessories

Item no.	Suitable fittings					
	M3-male	M4-male	M5-male	G1/8-male	G1/4-male	G1/4-female
132.4x2.031.14	270.014	270.111	270.300	--	--	--
132.7x4.034.14	270.014	270.111	270.300	--	--	--
132.15x5.067.14	--	--	--	270.431	--	--
132.24x8.066.14	--	--	--	270.431	--	--
132.36x12.068.14	--	--	--	270.431	--	--
132.45x15.064.14	--	--	--	--	270.097	270.098

FIPA challenge accepted
info@hidrafluid.es
976 24 32 10

Dimensions

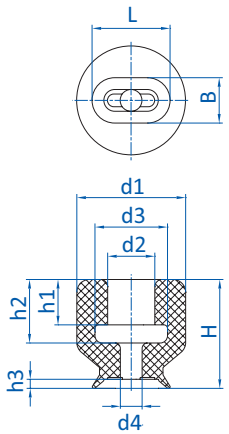

Drawing A

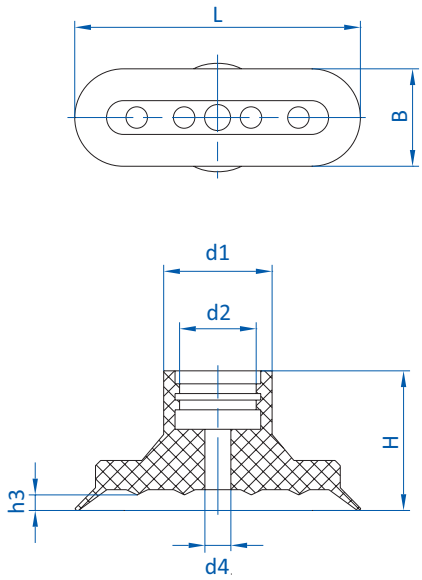

Drawing B

Item no.	Drawing	L [mm]	B [mm]	Ø d1 [mm]	Ø d2 [mm]	Ø d3 [mm]	Ø d4 [mm]	H [mm]	h1 [mm]	h2 [mm]	h3 [mm]
132.4x2.031.14	A	4.3	2.5	6	2.6	4	1.2	6	2.5	3.5	0.5
132.7x4.034.14	A	7.5	4	6	2.4	3	1.4	6	2.3	3	0.7
132.15x5.067.14	B	15	5	9	5	--	2	12	--	--	0.8
132.24x8.066.14	B	24	8.5	12.5	5	--	3	13	--	--	1.5
132.36x12.068.14	B	36	12	12	5	--	4	12	--	--	1.6
132.45x15.064.14	B	44	15	16.5	12	--	4	22	--	--	2.4

info@hidrafluid.es
976 24 32 10

Varioflex® bellows cups, 1.5 folds – SP-BX1

POLYURETHANE COMPOSITE MATERIAL 60°/30°

Product notes

Bellows vacuum cups with 1.5 folds made of an extremely wear-resistant polymer.
Soft, flexible sealing lip in 30° Shore A (red).
Stable body in 60° Shore A (black).
Cleats stabilize the product.

Advantage

> Long life cycle reduces machine downtimes
> Perfect sealing performance on rough or uneven surface
> High stability and fast reset
> Oil and ozone-resistant
> Bellows compensate for height differences
> Cleats allow for fast acceleration

Notes

Explanation of the type description:
> SP-BX1 = Series name of the bellows vacuum cup with 1.5 folds
> -xx = nominal diameter
> Example: SP-BX1-15 = bellows vacuum cup with 1.5 folds and a nominal diameter of 15 mm

Technical data

Model / Lip dimensions	Ø [mm]	Connection thread 1	Item no.	Connection thread 2	Item no.	Connection thread 3	Item no.		Usage temperature [°C (°F)]	Accessories Spare cup
	Bellows vacuum cups 1.5 folds – SP-BX1 fully assembled with fitting									
SP-BX1-15	16	M5-male	22.016.253.16	M6-male	22.016.254.16	--	--	4.5	10 - 50 (50 - 122)	23.016.263.16
SP-BX1-20	21	G1/8-male	22.021.255.16	--	--	--	--	5	10 - 50 (50 - 122)	23.021.264.16
SP-BX1-25	26	G1/8-male	22.026.256.16	--	--	--	--	5	10 - 50 (50 - 122)	23.026.265.16
SP-BX1-35	37	G1/8-female	22.037.257.16	G1/4-male	22.037.258.16	--	--	9	10 - 50 (50 - 122)	23.037.266.16
SP-BX1-50 -	53	G1/8-female	22.053.259.16	G1/4-male	22.053.260.16	G3/8-male	22.053.261.16	10	10 - 50 (50 - 122)	23.053.267.16
SP-BX1-75	75	G3/8-male	22.075.262.16	G3/8-female	22.075.263.16	--	--	18	10 - 50 (50 - 122)	--
SP-BX1-115	115	G3/8-IG	22.115.266.16	G1/2-IG	22.115.267.16	--	--	28	10 - 50 (50 - 122)	23.115.274.16
SP-BX1-160	160	G3/8-IG	22.160.264.16	G1/2-IG	22.160.265.16	--	--	40	10 - 50 (50 - 122)	23.160.273.16

info@hidrafluid.es
976 24 32 10

Dimensions

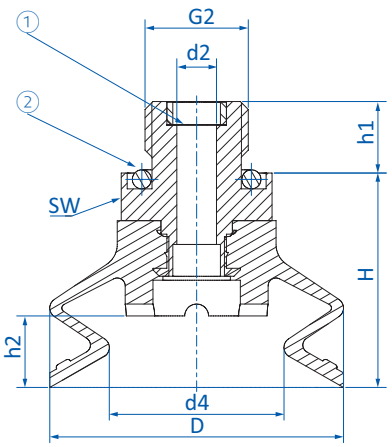

Drawing A

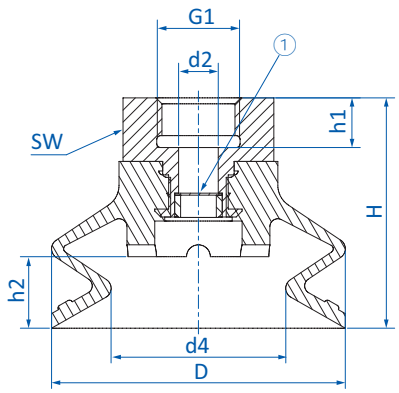

Drawing B

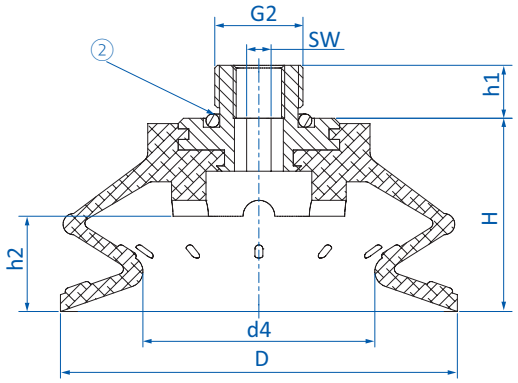

Drawing C

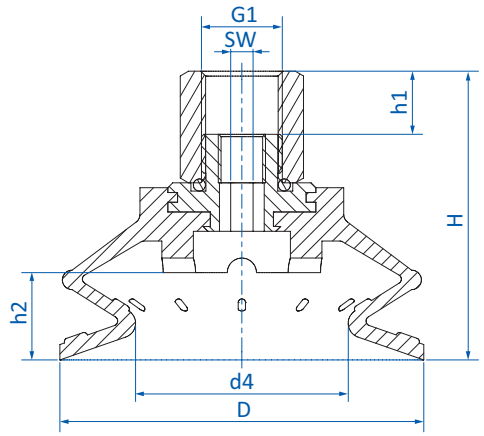

Drawing D

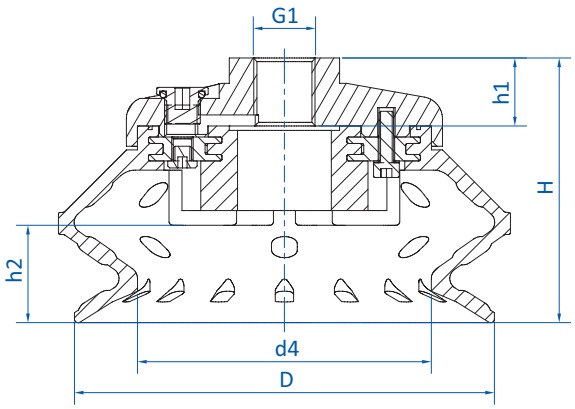

Drawing E

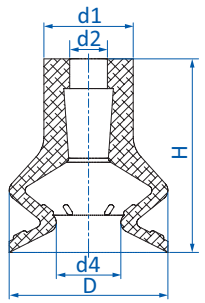

Drawing F

① = Filter screen ② = O-ring

Continued on the next page

info@hidrafluid.es
976 24 32 10

Dimensions

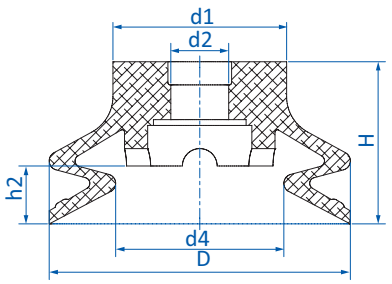

Drawing G

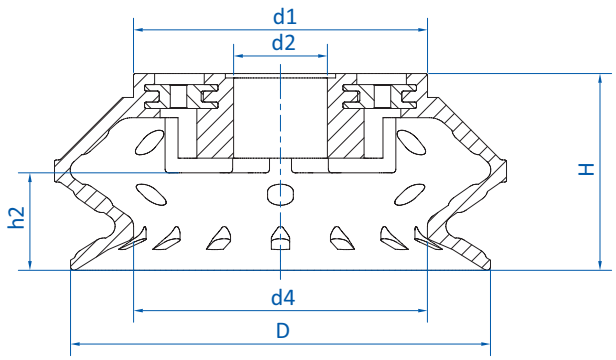

Drawing H

① = Filter screen ② = O-ring

Item no.	Drawing	Ø D [mm]	Ø d1 [mm]	Ø d2 [mm]	Ø d4 [mm]	G1 (female)	G2 (male)	H	h1 [mm]	h2 [mm]	SW
Bellows vacuum cups 1.5 folds – SP-BX1 fully assembled with fitting											
22.016.253.16	A	16	--	2.5	6.5	--	M5	25	3.6	--	8
22.016.254.16	A	16	--	2.5	6.5	--	M6	24	6	--	13
22.021.255.16	A	21	--	4	12	--	G1/8	19	7	5	13
22.026.256.16	A	26	--	4	14.5	--	G1/8	19	7	5	13
22.037.257.16	B	37	--	5	22	G1/8	--	29	6.3	9	19
22.037.258.16	A	37	--	5	22	--	G1/4	27	9	9	19
22.053.259.16	B	53	--	8	32.5	G1/8	--	35	9	10	22
22.053.260.16	A	53	--	6	32.5	--	G1/4	32	9	10	22
22.053.261.16	A	53	--	6	32.5	--	G3/8	32	10	10	22
22.075.262.16	C	75	--	--	44	--	G3/8	36.5	10	18	8
22.075.263.16	D	75	--	--	44	G3/8	--	59.5	13	18	8
22.115.266.16	E	115	--	--	79.9	G3/8	--	72	18.5	26.5	--
22.115.267.16	E	115	--	--	79.9	G1/2	--	72	18.5	26.5	--
22.160.264.16	E	160	--	--	112.7	G3/8	--	89	21	40.5	--
22.160.265.16	E	160	--	--	112.7	G1/2	--	89	21	40.5	--
Spare cups											
23.016.263.16	F	16	9	4	6.5	--	--	19.5	--	--	--
23.021.264.16	G	21	11	5	12	--	--	14	--	5	--
23.026.265.16	G	26	15	5	14.5	--	--	14	--	5	--
23.037.266.16	G	37	20	7	22	--	--	21	--	9	--
23.053.267.16	G	53	26	10.5	32.5	--	--	26	--	10	--
23.115.274.16	H	115	80	25.5	79.9	--	--	53.5	--	26.5	--
23.160.273.16	H	160	110	25.5	112.7	--	--	68	--	40.5	--

FIPA challenge accepted
info@hidrafluid.es
976 24 32 10

Varioflex® bellows cups, 2.5 folds – SP-BX2

POLYURETHANE COMPOSITE MATERIAL 60°/30°

Product notes

Bellows vacuum cups with 2.5 bellows made of an extremely wear-resistant polymer.
Soft, flexible sealing lip in 30° Shore A (red).
Stable body in 60° Shore A (black).

Advantage

> Long life cycle reduces machine downtimes
> Perfect sealing performance on rough or uneven surface
> High stability and fast reset
> Oil and ozone-resistant
> Excellent height and angle compensation
> Optional: filter disc from Ø 26 mm installed between the bellows

Notes

Explanation of the type description:
> SP-BX2 = Series name of the bellows vacuum cup with 2.5 folds
> -xx = nominal diameter
> Example: SP-BX2-15 = bellows vacuum cup with 2.5 folds and a nominal diameter of 15 mm

Technical data

Model / Lip dimensions	Ø [mm]	Connection thread 1	Item no.	Connection thread 2	Item no.	Connection thread 3	Item no.		Usage temp. [°C (°F)]	Accessories: Spare cup
Bellows vacuum cups 2.5 folds – SP-BX2 fully assembled with fitting										
SP-BX2-15	16	M5-male	20.016.145.16	M6-male	20.016.146.16	--	--	5.5	10 - 50 (50 - 122)	21.016.175.16
SP-BX2-20	21	G1/8-male	20.021.147.16	--	--	--	--	6.5	10 - 50 (50 - 122)	21.021.176.16
SP-BX2-25	26	G1/8-male	20.026.148.16	--	--	--	--	8	10 - 50 (50 - 122)	21.026.177.16
SP-BX2-35	37	G1/8-female	20.037.149.16	G1/4-male	20.037.150.16	--	--	14	10 - 50 (50 - 122)	21.037.177.16
SP-BX2-50	53	G1/8-female	20.053.151.16	G1/4-male	20.053.152.16	G3/8-male	20.053.153.16	19	10 - 50 (50 - 122)	21.053.178.16
SP-BX2-75	77	G3/8-male	20.077.154.16	G3/8-female	20.077.155.16	--	--	25	10 - 50 (50 - 122)	--
Bellows vacuum cups 2.5 folds – SP-BX2 fully assembled with fitting and filter										
SP-BX2-25	26	G1/8-male	20.026.148.16-FI	--	--	--	--	8	10 - 50 (50 - 122)	21.026.177.16-FI
SP-BX2-35	37	G1/8-female	20.037.149.16-FI	G1/4-male	20.037.150.16-FI	--	--	14	10 - 50 (50 - 122)	21.037.177.16-FI
SP-BX2-50	53	G1/8-female	20.053.151.16-FI	G1/4-male	20.053.152.16-FI	G3/8-male	20.053.153.16-FI	19	10 - 50 (50 - 122)	21.053.178.16-FI
SP-BX2-75	77	G3/8-male	20.077.154.16-FI	G3/8-female	20.077.155.16-FI	--	--	25	10 - 50 (50 - 122)	--

Continued on the next page

info@hidrafluid.es
976 24 32 10

Dimensions

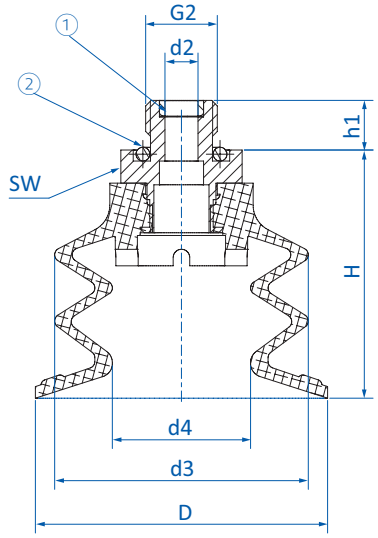

Drawing A

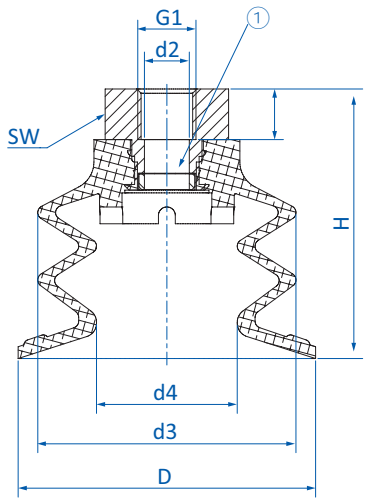

Drawing B

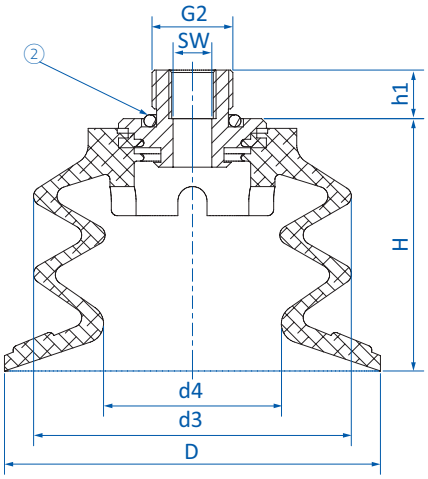

Drawing C

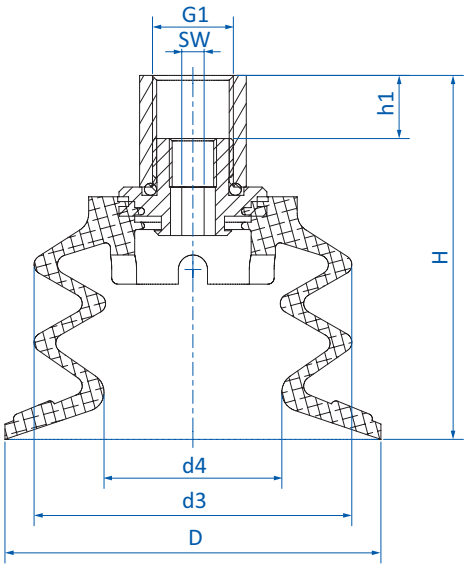

Drawing D

① = Filter screen ② = O-ring

FIPA challenge accepted
info@hidrafluid.es
976 24 32 10

Dimensions

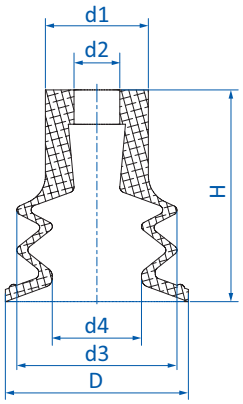

Drawing E

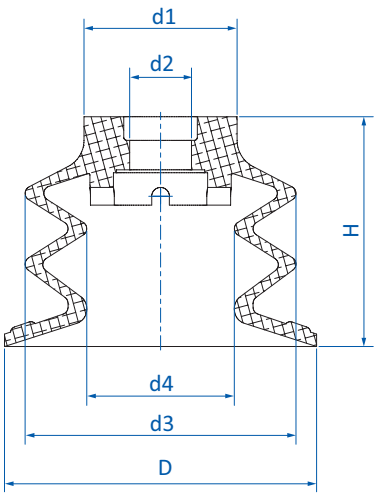

Drawing F

① = Filter screen ② = O-ring

Item no.	Drawing	Ø D [mm]	Ø d1 [mm]	Ø d2 [mm]	Ø d3 [mm]	Ø d4 [mm]	G1 (female)	G2 (male)	H	h1 [mm]	SW
Bellows vacuum cups 2.5 folds – SP-BX2 fully assembled with fitting											
20.016.145.16	A	16	--	2.8	14	9	--	M5	24	4	8
20.016.146.16	A	16	--	2.5	14	9	--	M6	23	6	13
20.021.147.16	A	21	--	4	20	12	--	G1/8	20.2	7	13
20.026.148.16	A	26	--	4	23	12	--	G1/8	24	7	13
20.037.149.16	B	37	--	5	31	18	G1/8	--	34.8	6.3	19
20.037.150.16	A	37	--	5	31	18	--	G1/4	32.8	9	19
20.053.151.16	B	53	--	8	46	25	G1/8	--	48	9	22
20.053.152.16	A	53	--	6	46	25	--	G1/4	45	9	22
20.053.153.16	A	53	--	6	46	25	--	G3/8	45	10	22
20.077.154.16	C	77.5	--	--	65.5	37	--	G3/8	52	10	8
20.077.155.16	D	77.5	--	--	65.5	37	G3/8	--	75	13	8
Spare cups											
21.016.175.16	E	16	9	4	14	9	--	--	18.5	--	--
21.021.176.16	F	21	11	5	20	12	--	--	15.2	--	--
21.026.177.16	F	26	15	5	23	12	--	--	19	--	--
21.037.177.16	F	37	20	7	31	18	--	--	27	--	--
21.053.178.16	F	53	26	10.5	46	25	--	--	39	--	--

info@hidrafluid.es
976 24 32 10

Flat vacuum cups with curved lip – SFU-D

Product notes	Advantage
Universal flat vacuum cups with tapering curved sealing lip. Connection via plug-in nipple.	> Pre-tension of the sealing lip enables gripping of uneven and slightly curved products > Large stroke

Technical data

Item no.	Model / Lip dimensions		Material / Color
112.004.001.2	SFU-D-4	0.5	SI (r)
112.005.002.2	SFU-D-5	0.7	SI (r)
112.006.003.2	SFU-D-6	1	SI (r)
112.008.007.2	SFU-D-8	1.5	SI (w)
112.010.011.2	SFU-D-10	2	SI (w)
112.012.015.2	SFU-D-12	2	SI (w)
112.015.022.2	SFU-D-15	2	SI (w)
112.018.024.2	SFU-D-18	2.3	SI (w)
112.020.031.2	SFU-D-20	2.3	SI (w)
112.022.037.2	SFU-D-22	2.5	SI (w)
112.025.042.2	SFU-D-25	4.5	SI (w)
112.030.052.2	SFU-D-30	4.5	SI (w)
112.035.060.2	SFU-D-35	5	SI (w)
112.040.071.2	SFU-D-40	4	SI (tr)
112.045.077.2	SFU-D-45	7	SI (w)
112.060.091.2	SFU-D-60	9	SI (tr)
112.085.102.2	SFU-D-85	12	SI (tr)

info@hidrafluid.es
976 24 32 10

Accessories

Item no.	Suitable fittings							
	M3-male	M5-male	M5-female	M6-male	G1/8-male	G1/8-female	G1/4-male	G1/4-female
112.004.001.2	270.025	--	--	--	--	--	--	--
112.005.002.2	270.025	--	--	--	--	--	--	--
112.006.003.2	270.025	--	--	--	--	--	--	--
112.008.007.2	--	270.536	--	--	--	--	--	--
112.010.011.2	--	270.134	270.347	270.104	270.033	270.478	--	--
112.012.015.2	--	270.134	270.347	270.104	270.033	270.478	--	--
112.015.022.2	--	270.134	--	270.104	270.033	270.478	--	--
112.018.024.2	--	270.134	270.347	270.104	270.033	270.478	--	--
112.020.031.2	--	270.134	270.347	270.104	270.033	270.478	--	--
112.022.037.2	--	270.134	270.347	270.104	270.033	270.478	--	--
112.025.042.2	--	270.443	--	--	270.238	270.110	270.534	--
112.030.052.2	--	270.443	--	--	270.238	270.110	270.534	--
112.035.060.2	--	--	--	--	--	--	270.451	270.452
112.040.071.2	--	--	--	--	--	--	270.451	270.452
112.045.077.2	--	--	--	--	--	--	270.451	270.452
112.060.091.2	--	--	--	--	--	--	270.042	--
112.085.102.2	--	--	--	--	--	--	270.216	--

Continued on the next page

info@hidrafluid.es
976 24 32 10

Dimensions

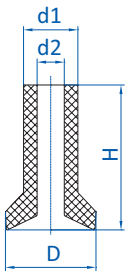

Drawing A

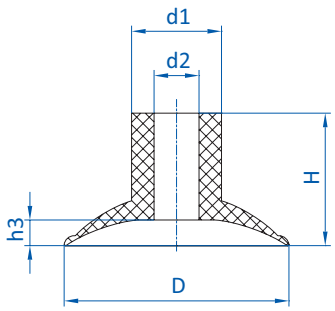

Drawing B

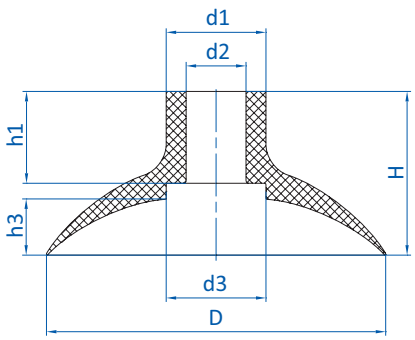

Drawing C

Item no.	Drawing	Ø **D** [mm]	Ø **d1** [mm]	Ø **d2** [mm]	Ø **d3** [mm]	**H** [mm]	**h1** [mm]	**h3** [mm]
112.004.001.2	A	4	3	1.5	--	7.5	--	--
112.005.002.2	A	5	3	1.5	--	8	--	--
112.006.003.2	A	6	3	1.5	--	8	--	--
112.008.007.2	B	8	5	2.8	--	8	--	1.6
112.010.011.2	B	10	6.7	3.8	--	10.5	--	1.9
112.012.015.2	B	12	8	4	--	11	--	1.7
112.015.022.2	B	15	8	4	--	12	--	2.5
112.018.024.2	B	18	8	3.9	--	11.5	--	2.3
112.020.031.2	B	20	8	4	--	12	--	2.3
112.022.037.2	B	22	8	4	--	13	--	2.5
112.025.042.2	B	25	12	6	--	16	--	4.3
112.030.052.2	B	30	12	6	--	17	--	4.4
112.035.060.2	B	35	15	10	--	16.5	--	5.2
112.040.071.2	B	40	15	10	--	16	--	4
112.045.077.2	B	45	15.5	10	--	17	--	7.5
112.060.091.2	C	60	15	10	25	23	10	9
112.085.102.2	C	85	25	15	25	41	23	14

FIPA challenge accepted
info@hidrafluid.es
976 24 32 10

Bellows vacuum cups, universal, 1.5 folds – SBU 1

Product notes	Advantage
Universal bellows vacuum cups with 1.5 folds for handling sensitive or uneven products. Connection up to Ø 75 mm by means of plug-in nipple, from Ø 88 mm with vulcanized bracket.	> Bellows compensate for differences in height and enable good adaptation to curved or uneven product surfaces > Soft attachment for sensitive products > Cost-effective replacement of worn seals

Technical data

Item no.	Model / Lip dimensions		Number of folds	Material / Color	Connection thread
23.005.181.2	SBU 1-5	2	1.5	SI (tr)	--
23.011.008.2	SBU 1-11	4.5	1.5	SI (tr)	--
23.013.120.2	SBU 1-13	4	1.5	SI (tr)	--
23.016.016.2	SBU 1-16	6	1.5	SI (tr)	--
23.019.119.2	SBU 1-19	4	1.5	SI (tr)	--
23.022.028.2	SBU 1-22	8	1.5	SI (tr)	--
23.025.137.2/25	SBU 1-25	9	1.5	SI (tr)	--
23.033.039.2	SBU 1-33	12	1.5	SI (tr)	--
23.043.096.2	SBU 1-43	12	1.5	SI (tr)	--
23.053.033.2	SBU 1-53	11	1.5	SI (tr)	--
23.075.151.2	SBU 1-75	20	1.5	SI (tr)	--
22.088.158.2	SBU 1-88	23	1.5	SI (tr)	G1/4-male
22.088.159.2	SBU 1-88	23	1.5	SI (tr)	G1/4-female

Continued on the next page

info@hidrafluid.es
976 24 32 10

Accessories

Item no.	Suitable fittings							
	M5-male	M5-female	M6-male	M10-male	G1/8-male	G1/8-female	G1/4-male	G1/4-female
23.005.181.2	270.195	--	--	--	--	--	--	--
23.011.008.2	270.013	270.005	270.103	--	270.003	270.015	--	--
23.013.120.2	270.013	270.005	270.103	--	270.003	270.015	--	--
23.016.016.2	270.013	270.005	270.103	--	270.003	270.015	--	--
23.019.119.2	270.013	270.005	270.103	--	270.003	270.015	270.194	--
23.022.028.2	270.013	270.005	270.103	--	270.003	270.015	270.194	--
23.025.137.2/25	270.013	270.005	270.103	--	270.003	270.015	270.194	--
23.033.039.2	--	--	270.315	--	270.196	270.114	270.190	270.192
23.043.096.2	--	--	270.315	--	270.196	270.114	270.190	270.192
23.053.033.2	--	--	270.315	--	270.196	270.114	270.190	270.192
23.075.151.2	--	--	--	270.177	--	--	270.451	270.452
22.088.158.2	--	--	--	--	--	--	--	--
22.088.159.2	--	--	--	--	--	--	--	--

Dimensions

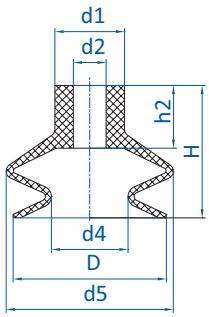

Drawing A

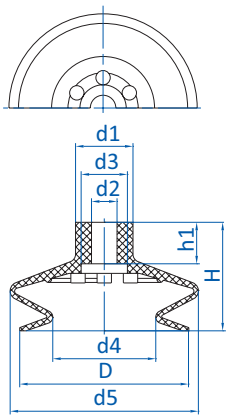

Drawing B

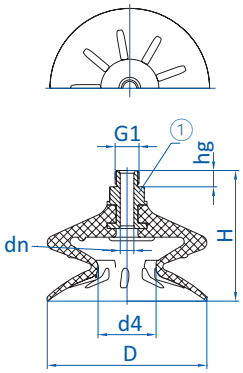

Drawing C

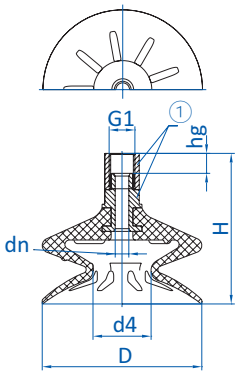

Drawing D

① = Aluminum fitting, vulcanized

FIPA challenge accepted
info@hidrafluid.es
976 24 32 10

Item no.	Drawing	Ø D [mm]	Ø d1 [mm]	Ø d2 [mm]	Ø d3 [mm]	Ø d4 [mm]	Ø d5 [mm]	Ø dn [mm]	G1	H [mm]	h1 [mm]	h2 [mm]	hg [mm]
23.005.181.2	A	5	3	1.5	--	2	5	--	--	13	--	9.5	--
23.011.008.2	A	12	10	5	--	4.5	12	--	--	16	--	9	--
23.013.120.2	A	13.5	10	3.8	--	5	13.5	--	--	16	--	9	--
23.016.016.2	A	16	10	5	--	8	17	--	--	19	--	9	--
23.019.119.2	A	18.5	10	4.5	--	11	19.5	--	--	15	--	8.5	--
23.022.028.2	A	22	10	4.7	--	11	24	--	--	19	--	9	--
23.025.137.2/25	A	24	10	4	--	10	24	--	--	23	--	9	--
23.033.039.2	B	33.5	18	8	16.5	17	36	--	--	28	13	--	--
23.043.096.2	B	43	18	8	14.5	23	45	--	--	27	12	--	--
23.053.033.2	B	53	18	8	14.5	32	59	--	--	34	13	--	--
23.075.151.2	B	75	27	11	--	43	70.5	--	--	52	--	22	--
22.088.158.2	C	88	--	--	--	32	88	7.5	G1/4	72	--	--	9
22.088.159.2	D	88	--	--	--	32	88	7.5	G1/4	83	--	--	11

info@hidrafluid.es
976 24 32 10

Bellows vacuum cups, universal, 2.5 folds – SBU 2

Product notes	Advantage
Universal bellows vacuum cups with 2.5 folds for handling sensitive or uneven products over large stroke movements. Connection up to Ø 75 mm by means of plug-in nipple, from Ø 88 mm with vulcanized bracket.	> Bellows compensate for differences in height and enable good adaptation to curved or uneven product surfaces > Soft attachment for sensitive products > Cost-effective replacement of worn seals

Technical data

Item no.	Model / Lip dimensions		Number of folds	Material / Color	Connection thread
21.004.083.2tr	SBU 2-4	3	2.5	SI (tr)	--
21.005.057.2/3 21.005.057.2/4	SBU 2-5	3	2.5	SI (tr)	--
21.006.093.2	SBU 2-6A	3	2.5	SI (tr)	--
21.006.087.2	SBU 2-6	3.5	2.5	SI (tr)	--
21.008.094.2	SBU 2-8	4	2.5	SI (tr)	--
21.009.002.2	SBU 2-9	2	2.5	SI (tr)	--
21.010.119.2	SBU 2-10	8	2.5	SI (tr)	--
21.012.135.2	SBU 2-12	7	2.5	SI (tr)	--
21.014.133.2	SBU 2-14A	11	2.5	SI (tr)	--
21.014.007.2	SBU 2-14	12	2.5	SI (tr)	--
21.018.010.2	SBU 2-18	8	2.5	SI (tr)	--
21.020.016.2	SBU 2-20	9	2.5	SI (tr)	--
21.025.060.2	SBU 2-25	19	2.5	SI (tr)	--
21.032.075.2	SBU 2-32	13	2.5	SI (tr)	--
21.043.049.2	SBU 2-43	19	2.5	SI (tr)	--
21.062.055.2	SBU 2-62	25	2.5	SI (tr)	--
20.088.123.2	SBU 2-88	36	2.5	SI (tr)	G1/4-male
20.088.124.2	SBU 2-88	36	2.5	SI (tr)	G1/4-female

FIPA challenge accepted
info@hidrafluid.es
976 24 32 10

Accessories

Item no.	Suitable fittings						
	M5-male	M5-female	M6-male	G1/8-male	G1/8-female	G1/4-male	G1/4-female
21.004.083.2tr	270.134	270.347	270.104	270.033	270.478	--	--
21.005.057.2/3 21.005.057.2/4	270.134	270.347	270.104	270.033	270.478	--	--
21.006.093.2	270.134	270.347	270.104	270.033	270.478	--	--
21.006.087.2	270.013	270.005	270.103	270.003	270.015	--	--
21.008.094.2	270.134	270.347	270.104	270.033	270.478	--	--
21.009.002.2	270.013	270.005	270.103	270.003	270.015	--	--
21.010.119.2	270.013	270.005	270.103	270.003	270.015	--	--
21.012.135.2	270.013	270.005	270.103	270.003	270.015	--	--
21.014.133.2	270.134	270.347	270.104	270.033	270.478	--	--
21.014.007.2	270.013	270.005	270.103	270.003	270.015	--	--
21.018.010.2	270.013	270.005	270.103	270.003	270.015	--	--
21.020.016.2	270.013	270.005	270.103	270.003	270.015	270.194	--
21.025.060.2	270.013	270.005	270.103	270.003	270.015	270.194	--
21.032.075.2	--	--	270.315	270.196	270.114	270.190	270.192
21.043.049.2	--	--	270.315	270.196	270.114	270.190	270.192
21.062.055.2	--	--	270.315	--	--	270.540	270.539
20.088.123.2	--	--	--	--	--	--	--
20.088.124.2	--	--	--	--	--	--	--

Dimensions

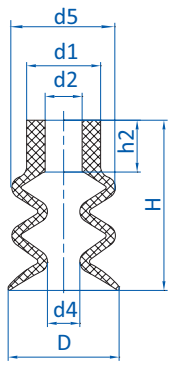

Drawing A

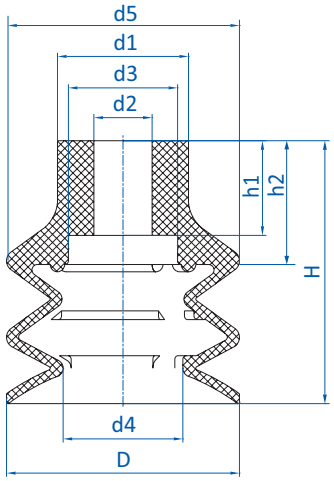

Drawing B

① = Aluminum fitting, vulcanized

Continued on the next page

info@hidrafluid.es
976 24 32 10

Dimensions

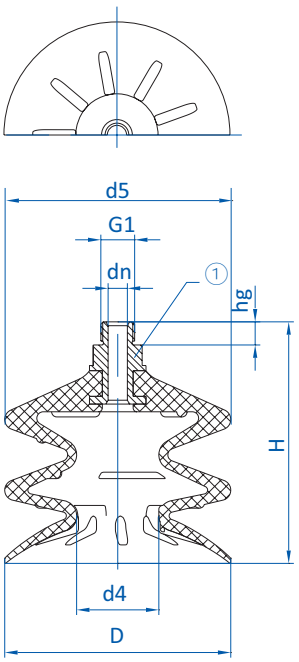

Drawing C

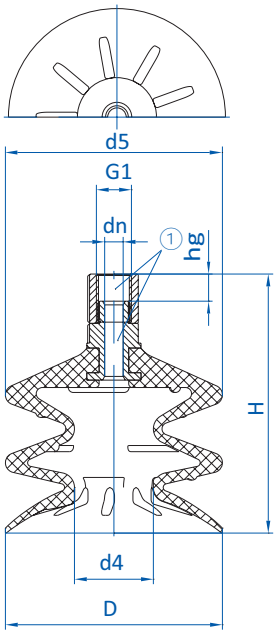

Drawing D

① = Aluminum fitting, vulcanized

Item no.	Drawing	Ø D [mm]	Ø d1 [mm]	Ø d2 [mm]	Ø d3 [mm]	Ø d4 [mm]	Ø d5 [mm]	Ø dn [mm]	G1	H [mm]	h1 [mm]	h2 [mm]	hg [mm]
21.004.083.2tr	A	4.5	7	4	--	2	6.5	--	--	14	--	8	--
21.005.057.2/3 21.005.057.2/4	A	5.5	7	4	--	2.5	6.5	--	--	14	--	8.5	--
21.006.093.2	A	6	8	4	--	3	8	--	--	15	--	8	--
21.006.087.2	A	6.5	9	5	--	2.5	6.5	--	--	14.5	--	7.5	--
21.008.094.2	A	7.5	8	4	--	4	7.5	--	--	15	--	8.5	--
21.009.002.2	A	9	9	5	--	4	9	--	--	15	--	7	--
21.010.119.2	A	10	10	5	--	4.5	10	--	--	21	--	7	--
21.012.135.2	A	12	10	5	--	5	12	--	--	21	--	9	--
21.014.133.2	A	14	10	3.8	--	5.5	14	--	--	23	--	7.5	--
21.014.007.2	A	15	10	5	--	4.5	15	--	--	23	--	7	--
21.018.010.2	A	18	10	4.5	--	7	18	--	--	22	--	8.5	--
21.020.016.2	A	20	10	4.5	--	10	20	--	--	23	--	9	--
21.025.060.2	A	25	10	4.8	--	10	25	--	--	33	--	8	--
21.032.075.2	B	32	18	8	15	16.5	32	--	--	36	--	17	--
21.043.049.2	B	42	20	8	15	15.5	42	--	--	46	13	--	--
21.062.055.2	B	62	21	8.5	14.5	27.5	62	--	--	54	13	14.7	--
20.088.123.2	C	88	--	--	--	32	88	7.5	G1/4	94	--	--	9
20.088.124.2	D	88	--	--	--	32	88	7.5	G1/4	105	--	--	11

FIPA challenge accepted
info@hidrafluid.es
976 24 32 10

FIPA Vacuum cups – Further industry solutions

> Besides the plastics industry FIPA vacuum cups are also successfully used in other markets for many years.

Vacuum cups for sheet metal handling

> Flat and bellows vacuum cups for dynamic handling of dry or oiled sheet metal
> Non-slip handling thanks to "anti-slip" supporting ribs
> Free of silicone and other paint-wetting-impairment substances (PWIS)

Vacuum cups for the packaging industry

> Round, oval and square bellows vacuum cups for gentle product contact
> Good adaptation to curved or flexible product surfaces
> Varioflex® bellows cups for good adaptation to uneven product surfaces

Vacuum cups for the food industry

> Bellows vacuum cups with flexible lip seal for optimum sealing
> FDA compliant vacuum cups for bakery products, with multiple bellows for large height compensation and gentle product handling
> FDA compliant special vacuum cups, e.g. for gentle handling of eggs or chocolates

For the full range of vacuum cups please refer to the FIPA Vacuum Technology Catalog or our website www.fipa.com.

info@hidrafluid.es
976 24 32 10

Non-rotating internal spring suspensions – smooth body

NEW

Product notes

> Free moving and high-load capability with ball guide technology
> Clampable smooth body
> Body and rod made of anodized aluminum

Technical data

Item no.	Stroke [mm]	Weight [g]
GR03.1010	10	7
GR03.1025	25	11
GR03.1420	20	23
GR03.1435	35	35
GR03.2025	25	54
GR03.2050	50	80

Dimensions

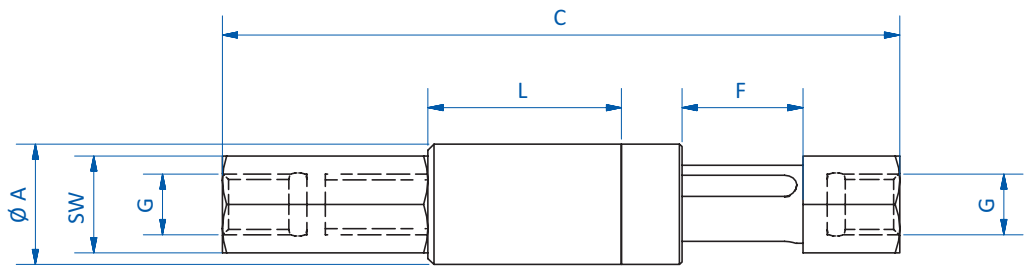

Item no.	Ø A [mm]	C [mm]	L [mm]	G	F [mm]	SW
GR03.1010	10	56	16	M5	10	8
GR03.1025	10	90.5	35.5	M5	25	8
GR03.1420	14	98.5	31.5	G1/8	20	12
GR03.1435	14	133.5	51.5	G1/8	35	12
GR03.2025	20	110	41	G1/8	25	16
GR03.2050	20	167.5	73.5	G1/8	50	16

info@hidrafluid.es
976 24 32 10

Non-rotating internal spring suspensions – threaded body

NEW

Product notes

> Free moving and high-load capability with ball guide technology
> Flexible mounting via threaded body
> Body and rod made of anodized aluminum

Technical data

Item no.	Stroke [mm]	Weight [g]
GR03.1010T	10	11
GR03.1025T	25	13
GR03.1210T	10	15
GR03.1225T	25	20
GR03.1620T	20	35
GR03.1635T	35	45
GR03.2025T	25	63
GR03.2050T	50	90
GR03.2540T	40	170
GR03.2580T	80	235

Dimensions

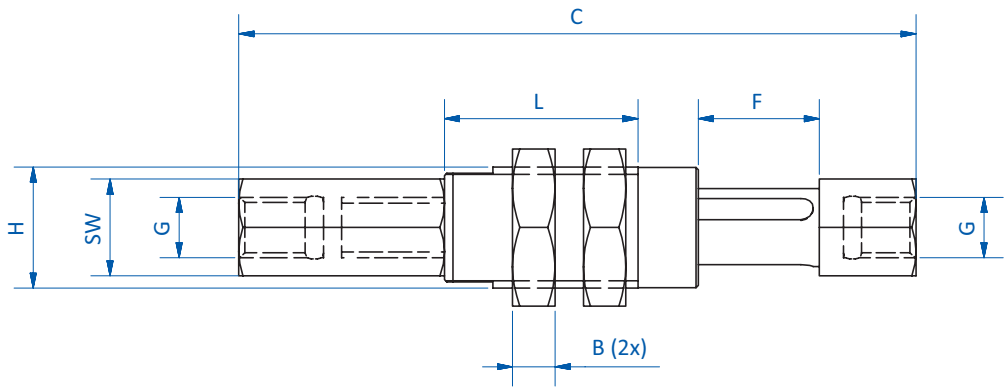

GR03.1010T | GR03.1025T

Continued on the next page

info@hidrafluid.es
976 24 32 10

Dimensions

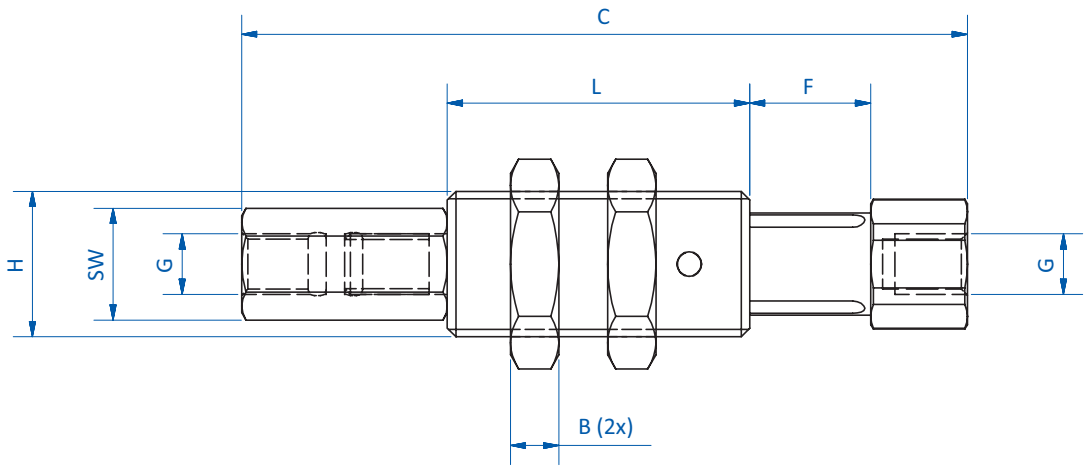

GR03.1210T | GR03.1225T | GR03.1620T | GR03.1635T | GR03.2025T | GR03.2050T | GR03.2540T | GR03.2580T

Item no.	H	B [mm]	C [mm]	L [mm]	G	F [mm]	SW
GR03.1010T	M10x1	3.5	56	16	M5	10	8
GR03.1025T	M10x1	3.5	90.5	35.5	M5	25	8
GR03.1210T	M12x1	4	60	25	M5	10	8
GR03.1225T	M12x1	4	94	44	M5	25	8
GR03.1620T	M16x1	5	98.5	38.5	G1/8	20	12
GR03.1635T	M16x1	5	135	58.5	G1/8	36.5	12
GR03.2025T	M20x1.5	6	113	50	G1/4	25	16
GR03.2050T	M20x1.5	6	170.5	82.5	G1/4	50	16
GR03.2540T	M25x1.5	8	159	71	G3/8	40	22
GR03.2580T	M25x1.5	8	249	121	G3/8	80	22

FIPA challenge accepted
info@hidrafluid.es
976 24 32 10

Suspensions with internal spring and threaded connection – SZ-NIV-I

BESTSELLER

Product notes

> Compensate for height differences
> Soft attachment for sensitive products
> With internal spring protected from dirt and with spring deflection limiter
> Vacuum connection on top, vacuum channel via suspension

Technical data

Item no.	Model	Thread suction side G2	Thread fixing bushes G3	Stroke C [mm]	Spring rate [N/mm]	Max. spring force [N]	Spring pre-load [N]	Weight [g]	Suitable mounting bracket
50.120	SZ-NIV-I-M5-IG-7	M5-female	G1/8-male	7	0.606	6	1.8	17	GR02.230 (p.86)
50.123	SZ-NIV-I-G1/8-AG-8	G1/8-male	M14x1.5-male	8	0.097	2.6	1.8	41	--
50.124	SZ-NIV-I-G1/8-AG-20	G1/8-male	M16x1-male	19	0.482	12.8	3.7	73	GR02.231 (p.86)

Dimensions

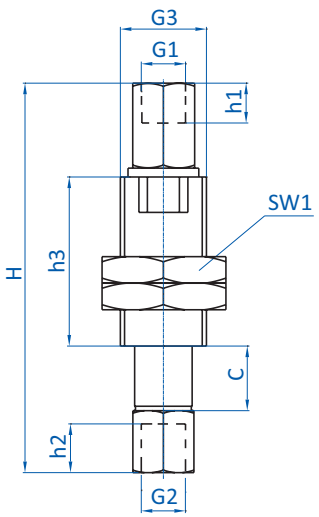

50.120

Continued on the next page

info@hidrafluid.es
976 24 32 10

Dimensions

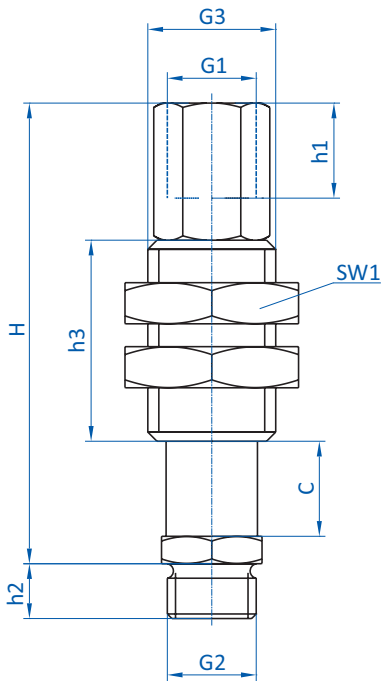

50.123 | 50.124

Item no.	**H** [mm]	**h1** [mm]	**h2** [mm]	**h3** [mm]	**SW1**	**G1** (female)	**G2** (female)	**G2** (male)	**G3** (male)	**C** [mm]
50.120	44	4.3	5	19	14	M5	M5	--	G1/8	7
50.123	50	10	6	22	19	G1/8	--	G1/8	M14x1.5	8
50.124	73	12	5.6	35	21	G1/8	--	G1/8	M16x1	20

FIPA challenge accepted
info@hidrafluid.es
976 24 32 10

Standard suspensions with threaded connection – SZ-NIV-S

Product notes

> Compensate for height differences
> Soft attachment for sensitive products
> Leveling as standard version
> Vacuum connection on top, vacuum channel via suspension
> Also available non-rotating (M5-female)

Notes

> Recommendation: For the best possible service life do not exceed max. stroke indicated

Technical data

Item no.	Model	Thread suction side G2	Thread fixing bushes G3	Stroke C [mm]	Spring rate [N/mm]	Max. spring force [N]	Spring pre-load [N]	Non-rotating	Weight [g]	Suitable mounting bracket
50.158	SZ-NIV-S-M5-IG-5	M5-female	G1/8-male	5	0.393	4	2	--	17	GR02.230 (p.86)
50.149	SZ-NIV-S-M5-IG-10	M5-female	G1/8-male	10	0.361	5.8	2.2	--	18	GR02.230 (p.86)
50.152	SZ-NIV-S-M5-IG-10-VS	M5-female	G1/8-male	10	0.361	5.5	1.9	Yes	19	GR02.230 (p.86)
50.150	SZ-NIV-S-M5-IG-20	M5-female	G1/8-male	18	0.227	4.3	0.3	--	20	GR02.230 (p.86)
50.153	SZ-NIV-S-M5-IG-20-VS	M5-female	G1/8-male	20	0.227	4.8	0.3	Yes	21	GR02.230 (p.86)
50.230	SZ-NIV-S-G1/8-AG-15	G1/8-male	M16x1-male	15	0.211	6.5	3.3	--	94	GR02.231 (p.86)
50.160	SZ-NIV-S-G1/8-AG-25	G1/8-male	M16x1-male	25	0.231	8.7	2.9	--	94	GR02.231 (p.86)
50.162	SZ-NIV-S-G1/8-AG-50	G1/8-male	M16x1-male	50	0.156	9.7	1.9	--	110	GR02.231 (p.86)
50.164	SZ-NIV-S-G1/4-AG-25	G1/4-male	M20x1.5-male	25	0.65	18.3	2	--	136	GR02.232 (p.86)
50.166	SZ-NIV-S-G1/4-AG-75	G1/4-male	M20x1.5-male	75	0.245	19.4	1.1	--	195	GR02.232 (p.86)

Continued on the next page

info@hidrafluid.es
976 24 32 10

Dimensions

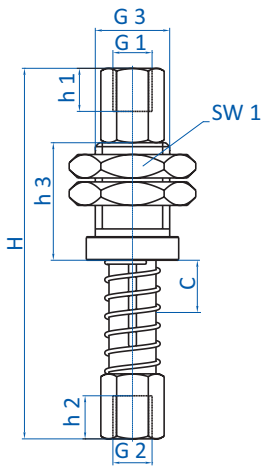

50.158 | 50.149 | 50.152 | 50.150 | 50.153

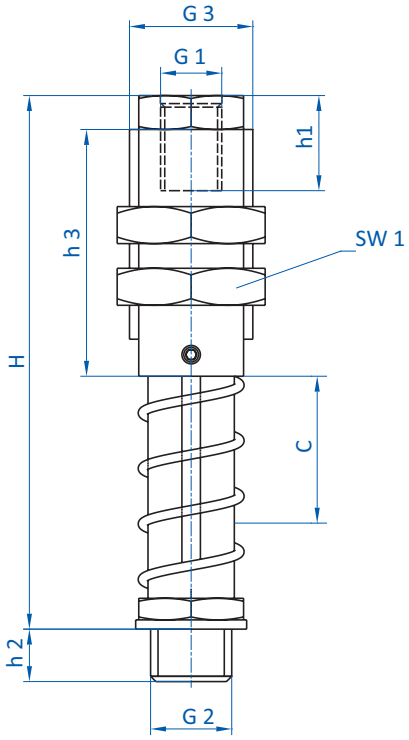

50.230 | 50.160 | 50.162 | 50.164 | 50.166

Item no.	H [mm]	h1 [mm]	h2 [mm]	h3 [mm]	SW1	G1 (female)	G2 (male)	G2 (female)	G3 (male)	C [mm]
50.158	43	5.5	6.2	15	14	M5	--	M5	G1/8	5
50.149	47	5.5	6.2	15	14	M5	--	M5	G1/8	10
50.152	47	5.5	6.2	15	14	M5	--	M5	G1/8	10
50.150	59	5.5	6.2	15	14	M5	--	M5	G1/8	20
50.153	59	5.5	6.2	15	14	M5	--	M5	G1/8	20
50.230	72	8	6.5	30	22	G1/8	G1/8	--	M16x1	15
50.160	85	8.5	8.5	30	22	G1/8	G1/8	--	M16x1	25
50.162	116	8.5	6.5	30	22	G1/8	G1/8	--	M16x1	50
50.164	95	15	9	40	24	G1/8	G1/4	--	M20x1.5	25
50.166	153	15	10.5	40	24	G1/8	G1/4	--	M20x1.5	75

FIPA challenge accepted
info@hidrafluid.es
976 24 32 10

Grippers at a glance 162
Sprue grippers 164
Gripper fingers 200
Gripper finger accessories 204
Parallel grippers 209
Angular grippers 233
Expansion grippers 242
Special grippers at a glance 254
Needle grippers 256
Magnetic grippers 269
Bernoulli vacuum cups 270
Customized grippers 278

info@hidrafluid.es
976 24 32 10

FIPA Grippers

> Active gripper elements for secure and precise demolding of plastic parts or general handling of workpieces

Sprue grippers

> Wide jaw opening for large sprues
> Narrow closing-gap for small sprues
> Single-acting or double-acting
> Series 130 and 140 come with self-centering factory setting, easy to deactivate if required
> Detects sprues larger 1 mm

> See page 164

Grippers with stroke

> For flat sprues or flaps
> Feed lift for demolding of plastic parts
> Return lift for depositing
> Double-acting and self-centering
> Detects parts larger 1 mm

> See page 190

Grippers for direct mounting

> Compact design for direct integration to extrusions
> Single-acting (GR04.110A and B) and double-acting (GR04.110)
> Detects sprues larger 1 mm

> See page 193

Gripper fingers

> Gripping behind and clamping workpieces
> 35° and 95° lift
> HNBR elastomer pads for gentle product contact
> Centering and stop elements available

> See page 200

Parallel and angular grippers

> Parallel grippers with large stroke
> 2-finger parallel gripper for pick & place applications, handling of inserts
> 3-finger gripper for precise handling of e.g. inserts
> Angle grippers for gripping on undercuts or for clamping parts
> For short cycle times, double-acting grippers available

> See page 209

info@hidrafluid.es
976 24 32 10

FIPA Sprue grippers – technical properties

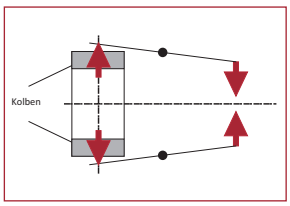

Very high gripping force
> Force directly transferred to gripper jaws by two pneumatic pistons
> Wear is minimized, gripping force is maximized

Long life due to robust design
> Gripper body and jaws made of high-strength, anodized aluminum alloy
> Maximizes wear resistance and lifetime

Direct part detection
> Large area sensor activation, independent of sprue position in the gripper
> PNP and NPN sensors
> Detects sprues larger 1 mm
> Integrated control LED

Indirect part detection
> Sensor activated if no part has been gripped and jaws are fully closed
> PNP and NPN sensors
> Sensors without mechanical or moving components, suitable for high loads
> Integrated control LED

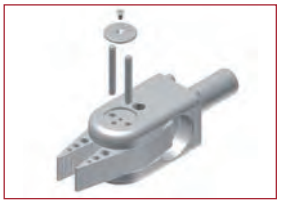

Series 130 and 140 can be easy disassembled without snap rings
> Jaws quickly exchanged
> Grippers easily changed over to non-self-centering

info@hidrafluid.es
976 24 32 10

Series 60 – miniature grippers, clamping diameter 10 mm

NEW

Product notes

> Gripper for small sprues and restricted space
> Gap-free closing
> Body and jaws made of high-strength anodized aluminum alloy
> Single-acting
> Medium: filtered and oiled/unoiled air

Technical data

Item no.	Operating pressure [bar (psi)]	Closing force at 6 bar (87 psi) [N]	Weight [g/m]
GR04.060	6 (87)	3.5	5.3

Dimensions

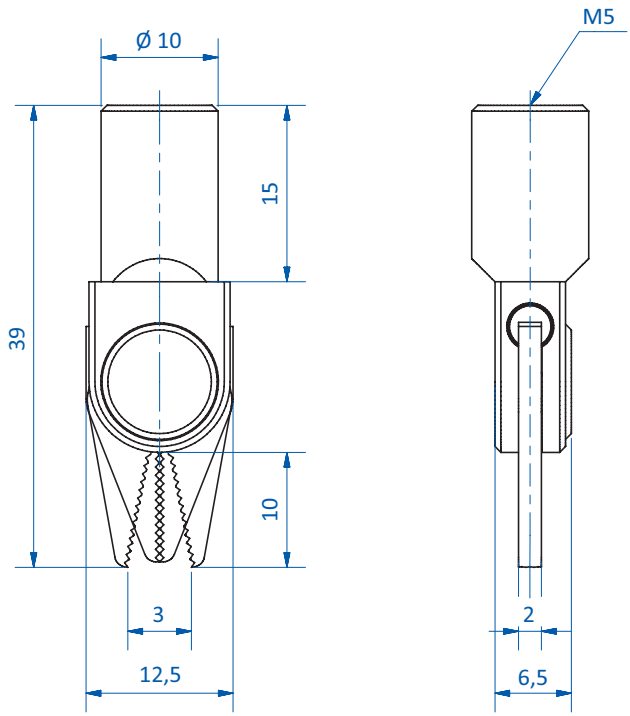

info@hidrafluid.es
976 24 32 10

Series 80 – miniature sprue gripper

Product notes

> Clamping diameter 10 mm
> Body and jaws made of anodized aluminum alloy
> Principle of operation: single-acting
> Medium: filtered and oiled/unoiled air

Technical data

Item no.	Max. operating pressure [bar (psi)]	Closing force at 6 bar (87 psi) [N]	Weight [g]
GR04.080	6 (87)	12	8

Dimensions

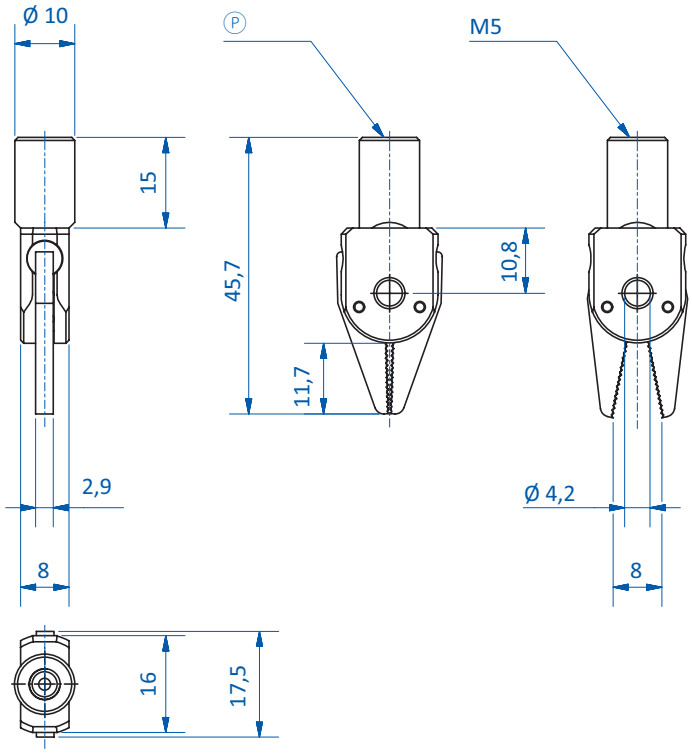

info@hidrafluid.es
976 24 32 10

Series 90 – miniature sprue grippers, clamping diameter 10 mm – single-acting

Product notes

> Grippers for small gates and limited space requirement
> High gripping force and wide jaw opening
> Housings and gripper jaws consist of an anodized, high-strength aluminum alloy
> Model H with replaceable HNBR pads for gentle handling
> Index 1N and 1P for direct sensor monitoring
> Index 2N and 2P for teachable sensors
> Index 3P for indirect sensor monitoring
> Single-acting
> Medium: filtered and oiled/non-oiled air

Notes

> PNP Inverter 20.530 enables direct control of parts on gripper GR04.090-3N: Sensor triggers as soon as part is gripped
> The converter 20.531 enables the use of grippers in NPN circuits

Technical data

Item no.	Jaw design	Operating pressure [bar (psi)]	Sensor	Closing force at 6 bar (87 psi) [N]	Weight [g]	Accessories
GR04.090	Standard	2.5 - 6 (36.3 - 87)	--	15	14	--
GR04.090H	HNBR pad	2.5 - 6 (36.3 - 87)	--	15	15	HNBR pad: GR04.090-4
GR04.090-1N	Standard	2.5 - 6 (36.3 - 87)	NPN	15	16	Plug connector: 20.527 (p.411) Plug connector: 20.528 (p.411) Connector cable: 20.503 (p.410) Connector cable: 20.507 (p.410)
GR04.090-1P	Standard	2.5 - 6 (36.3 - 87)	PNP	15	16	Plug connector: 20.527 (p.411) Plug connector: 20.528 (p.411) Connector cable: 20.503 (p.410) Connector cable: 20.507 (p.410)
GR04.090-3P	Standard	2.5 - 6 (36.3 - 87)	PNP	15	14	Connector cable: 20.503 (p.410) Signal converter: 20.530 (p.422) Signal converter: 20.531 (p.422)
GR04.090H-2N	HNBR pad	2.5 - 6 (36.3 - 87)	NPN	15	17	Connector cable: 20.501 (p.410) Connector cable: 20.502 (p.410) HNBR pad: GR04.090-4
GR04.090H-2P	HNBR pad	2.5 - 6 (36.3 - 87)	PNP	15	17	Connector cable: 20.501 (p.410) Connector cable: 20.502 (p.410) HNBR pad: GR04.090-4

info@hidrafluid.es
976 24 32 10

Dimensions

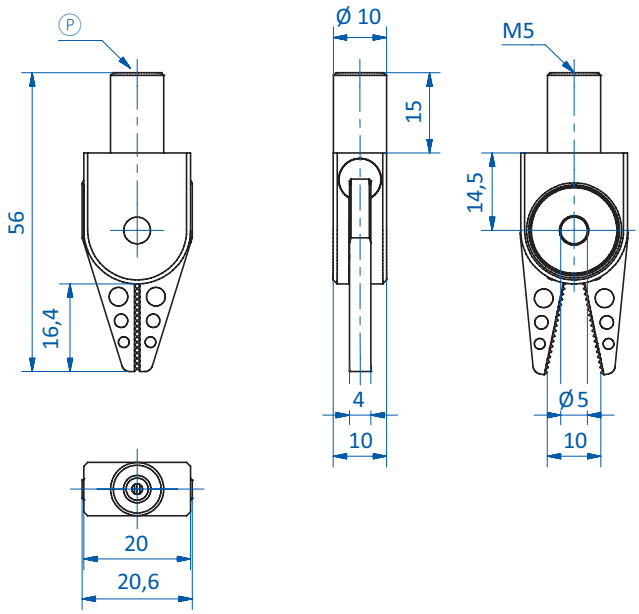

GR04.090

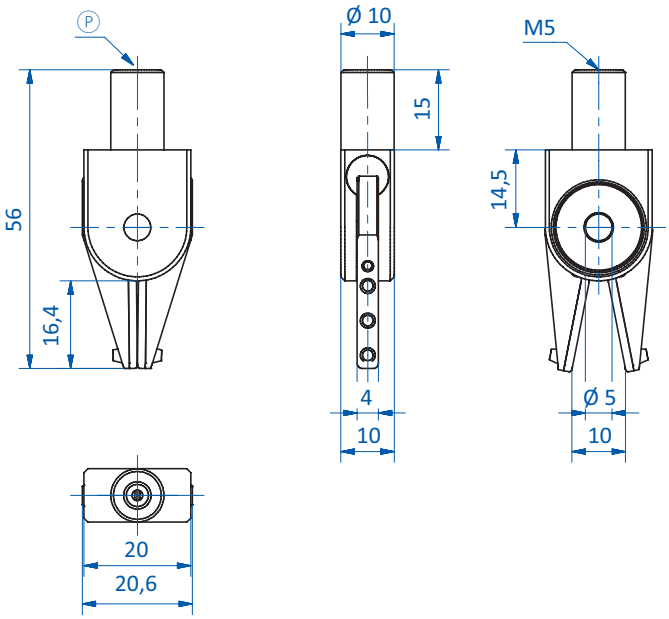

GR04.090H

Ⓟ = Compressed air connection

Continued on the next page

info@hidrafluid.es
976 24 32 10

Dimensions

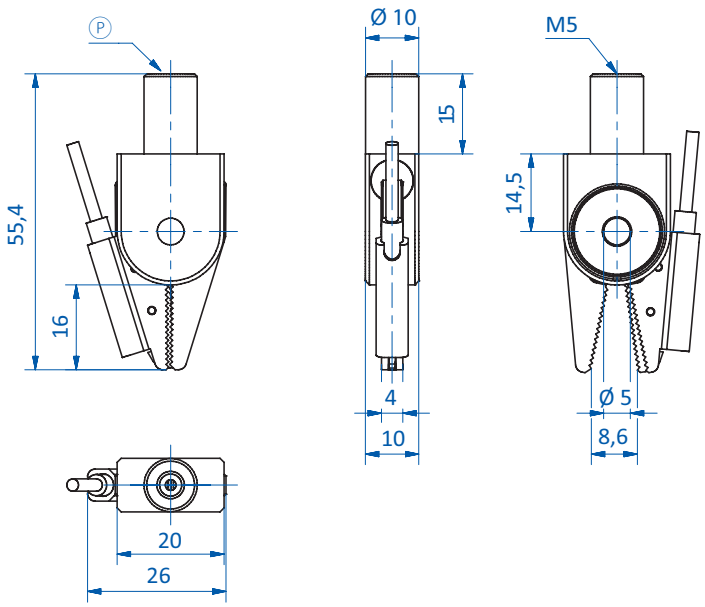

GR04.090-1N | GR04.090-1P

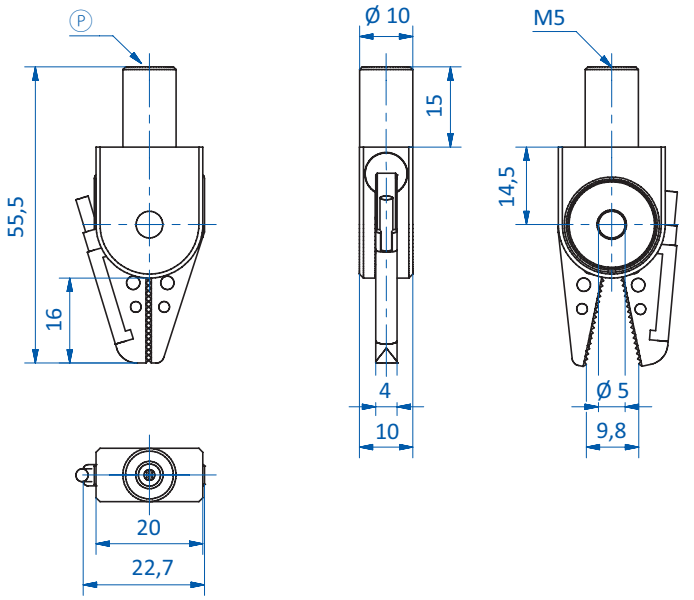

GR04.090-3P

Ⓟ = Compressed air connection

FIPA challenge accepted
info@hidrafluid.es
976 24 32 10

Dimensions

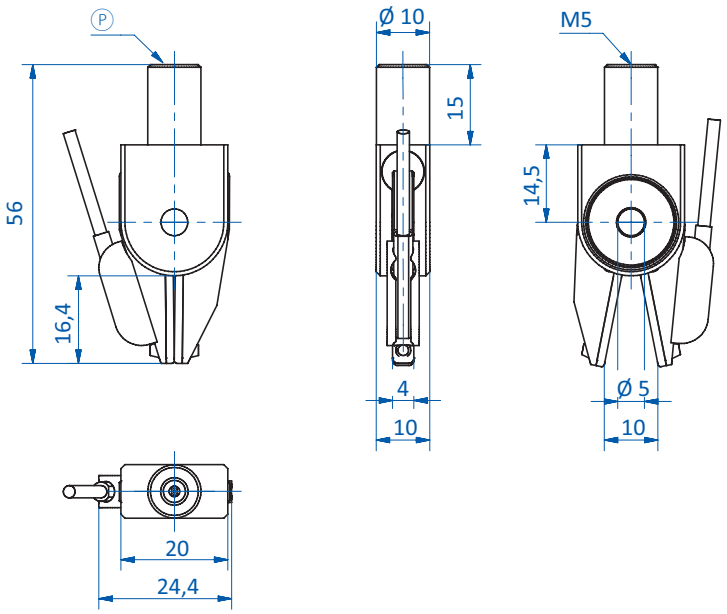

GR04.090H-2N | GR04.090H-2P

Ⓟ = Compressed air connection

info@hidrafluid.es
976 24 32 10

Series 100 – sprue grippers, clamping diameter 10 mm – single-acting

Product notes

> Grippers with wide jaw opening for large gates
> Gap-free closing for flat gates
> Housings and gripper jaws consist of an anodized, high-strength aluminum alloy
> Model B with rounded gripper jaws for large/inclined gates
> Model U for special gripper jaws; the closing force depends on the shape of the gripper jaws
> Model S with sawtooth profile for inclined gates
> Model H with replaceable HNBR pads for gentle handling
> Model XW with extra wide gripper jaws
> Index 1N and 1P for direct monitoring; large-area sensor operation, regardless of the position of the gate in the gripper
> Index 2N and 2P for direct monitoring; sensor with two freely adjustable switching points
> Index 3N and 3P for indirect monitoring; signal triggering if no component has been gripped; no moving parts and thus increased mechanical stability
> Single-acting
> Medium: filtered and oiled/non-oiled air

Technical data

Item no.	Jaw design	Operating pressure [bar (psi)]	Sensor	Closing force at 6 bar (87 psi) [N]	Weight [g]	Accessories
GR04.100	Standard	2.5 - 8 (36.3 - 116)	--	22	49	--
GR04.100B	Sawtooth jaws round	2.5 - 8 (36.3 - 116)	--	22	49	--
GR04.100U	Universal	2.5 - 8 (36.3 - 116)	--	--	44	--
GR04.100S	Sawtooth jaws straight	2.5 - 8 (36.3 - 116)	--	22	49	--
GR04.100H	HNBR pad	2.5 - 8 (36.3 - 116)	--	22	46	HNBR pad: GR04.103-4HNBR
GR04.100HNBR	Fully HNBR-coated	2.5 - 8 (36.3 - 116)	--	22	48	--
GR04.100XW	Xwide	2.5 - 8 (36.3 - 116)	--	22	85	--
GR04.100-1N	Standard	2.5 - 8 (36.3 - 116)	NPN	22	52	Sensor: GS04.002 (p.408) Connector cable: 20.503 (p.410)
GR04.100-1P	Standard	2.5 - 8 (36.3 - 116)	PNP	22	52	Sensor: GS04.001 (p.408) Connector cable: 20.503 (p.410)
GR04.100-2N	Standard	2.5 - 8 (36.3 - 116)	NPN	22	53	Sensor: GS04.006 Connector cable: 20.501 (p.410) Connector cable: 20.502 (p.410)
GR04.100-2P	Standard	2.5 - 8 (36.3 - 116)	PNP	22	53	Sensor: GS04.005 Connector cable: 20.501 (p.410) Connector cable: 20.502 (p.410)
GR04.100-3N	Standard	2.5 - 8 (36.3 - 116)	NPN	22	50	Sensor: GR04.203N (p.404) Connector cable: 20.503 (p.410)
GR04.100-3P	Standard	2.5 - 8 (36.3 - 116)	PNP	22	50	Sensor: GR04.203P (p.404) Connector cable: 20.503 (p.410)
GR04.100H-2N	HNBR pad	2.5 - 8 (36.3 - 116)	NPN	22	50	Sensor: GS04.006 Connector cable: 20.503 (p.410) HNBR pad: GR04.103-4HNBR
GR04.100H-2P	HNBR pad	2.5 - 8 (36.3 - 116)	PNP	22	50	Sensor: GS04.005 Connector cable: 20.503 (p.410) HNBR pad: GR04.103-4HNBR

info@hidrafluid.es
976 24 32 10

Dimensions

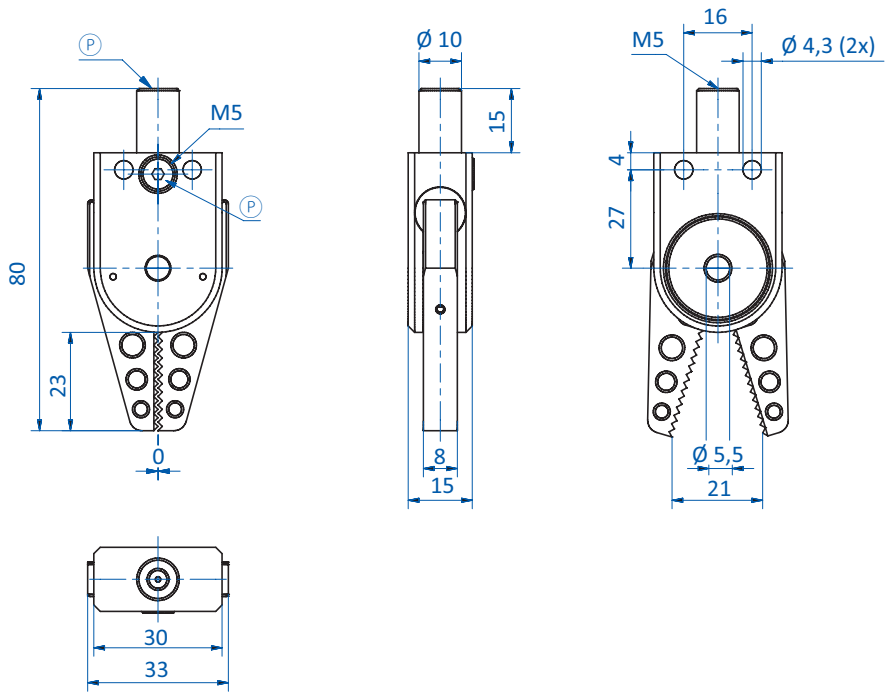

GR04.100

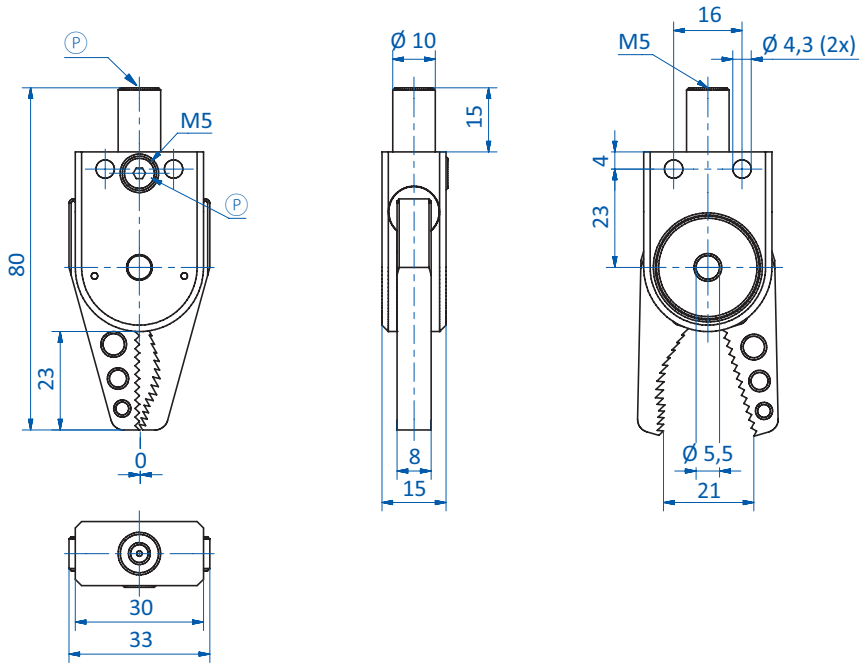

GR04.100B

Ⓟ = Compressed air connection

Continued on the next page

info@hidrafluid.es
976 24 32 10

Dimensions

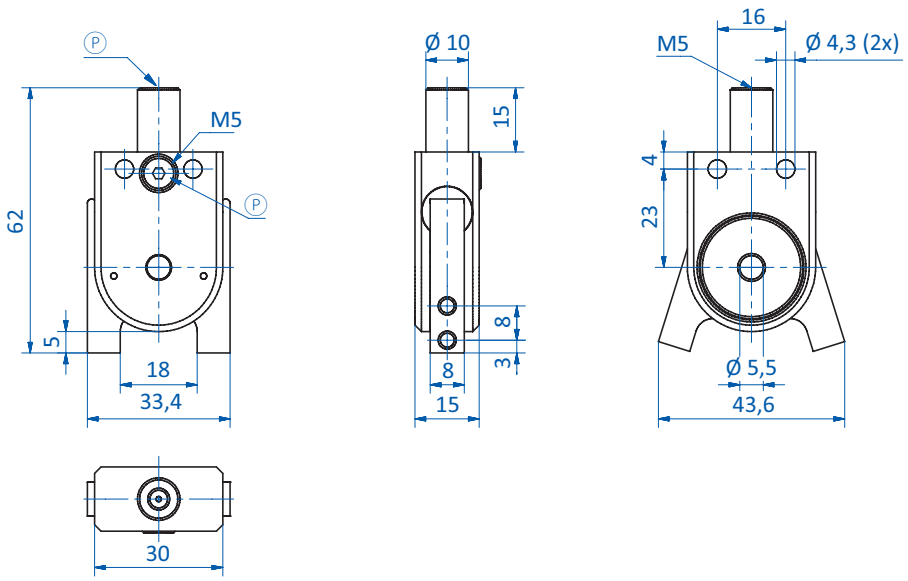

GR04.100U

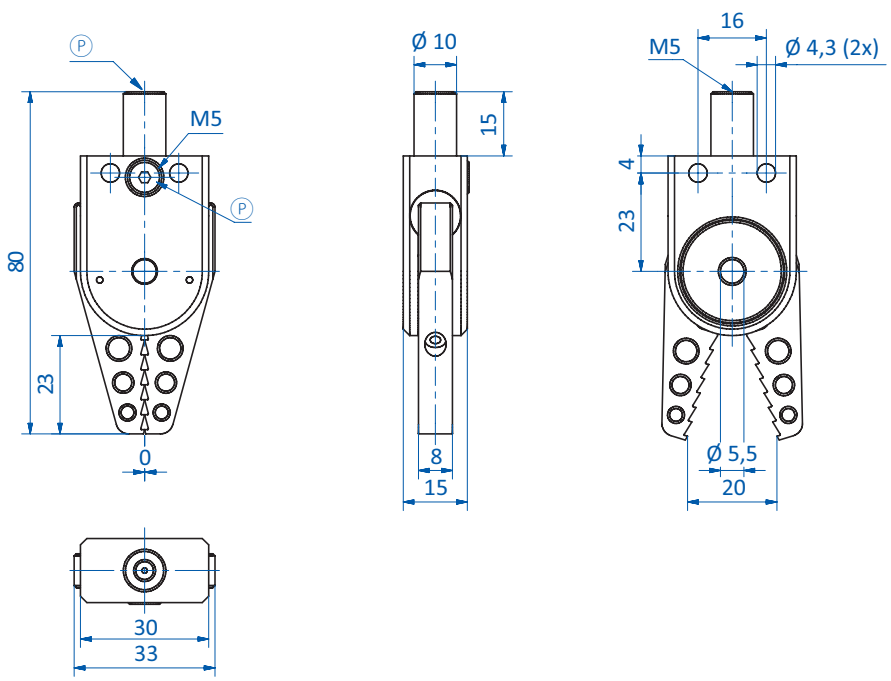

GR04.100S

Ⓟ = Compressed air connection

FIPA challenge accepted
info@hidrafluid.es
976 24 32 10

Dimensions

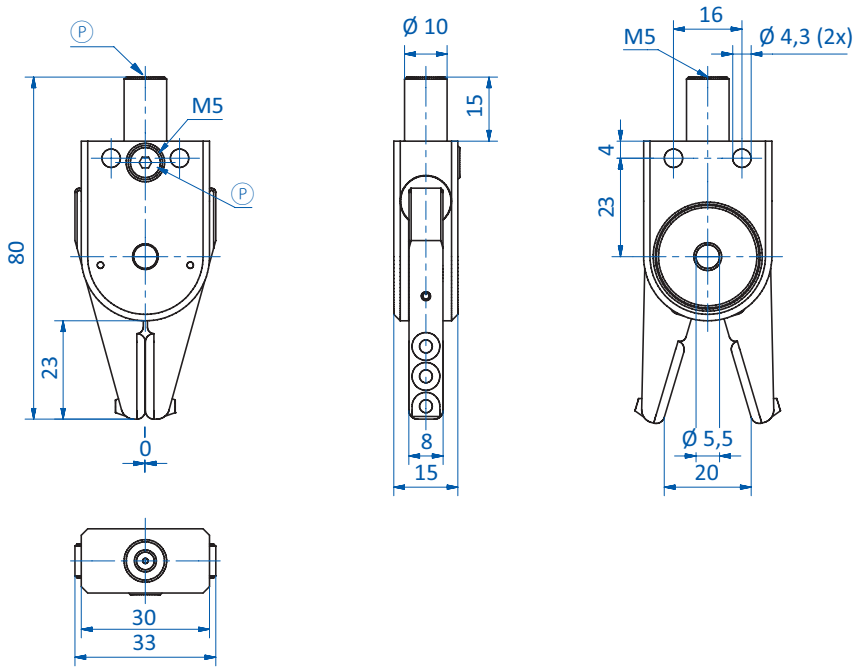

GR04.100H

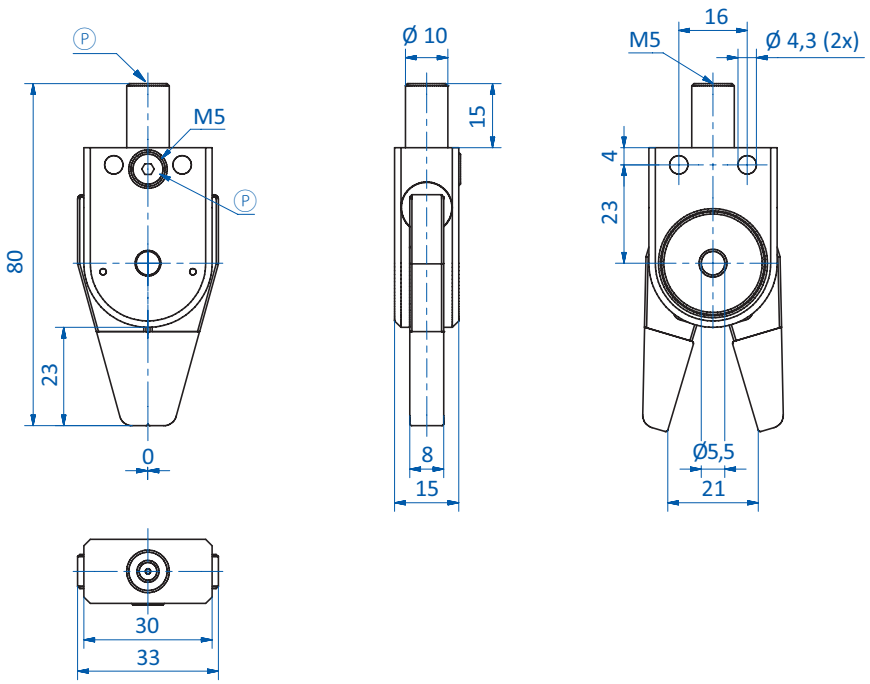

GR04.100HNBR

Ⓟ = Compressed air connection

Continued on the next page

info@hidrafluid.es
976 24 32 10

Dimensions

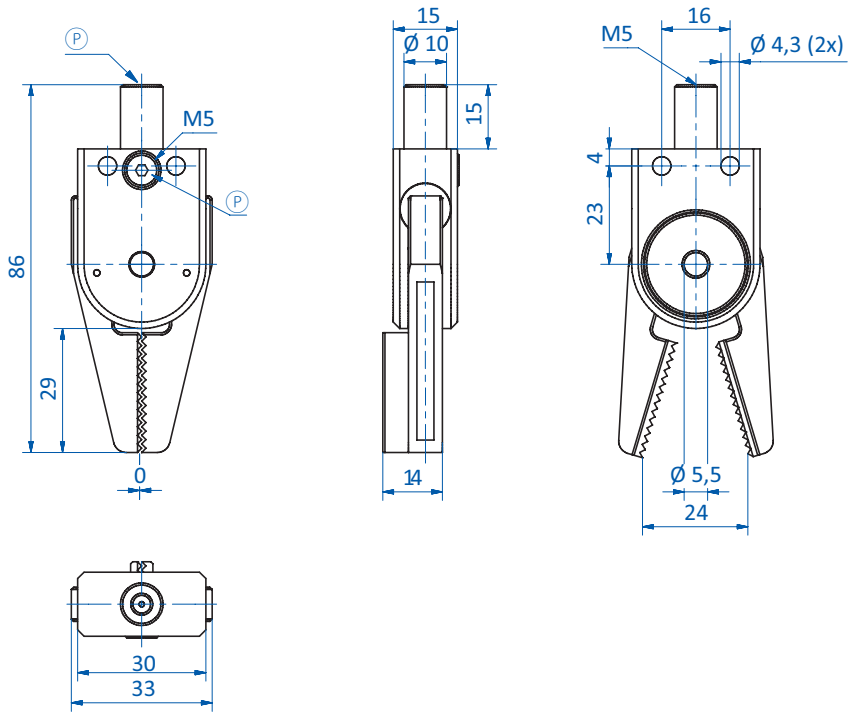

GR04.100XW

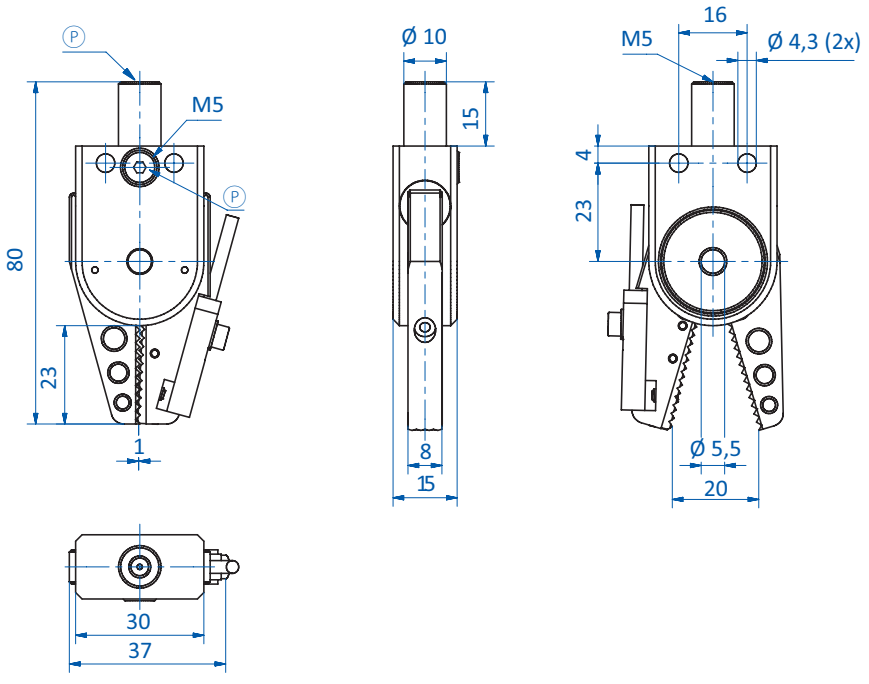

GR04.100-1N | GR04.100-1P

Ⓟ = Compressed air connection

FIPA challenge accepted
info@hidrafluid.es
976 24 32 10

Dimensions

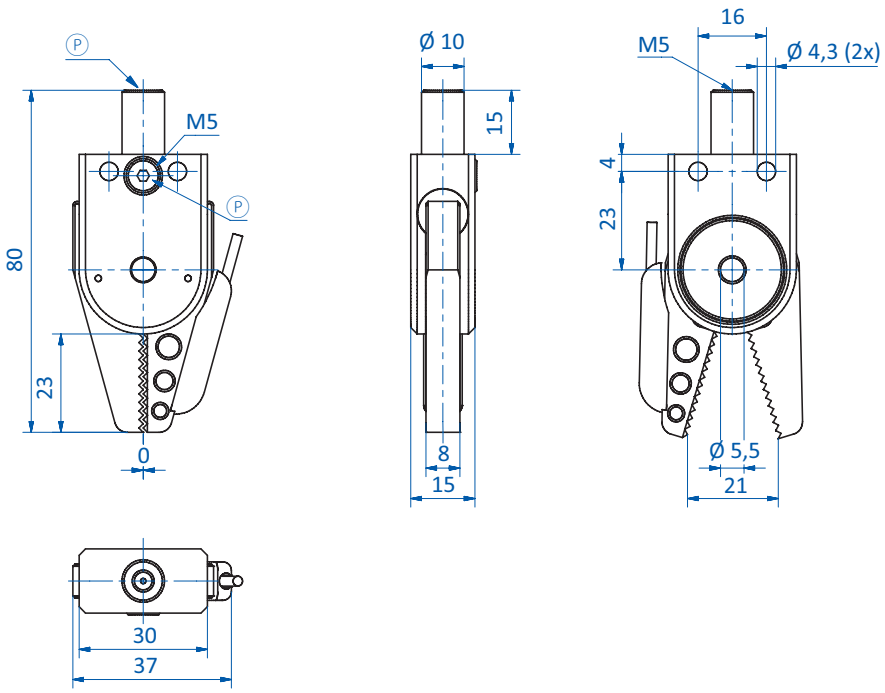

GR04.100-2N | GR04.100-2P

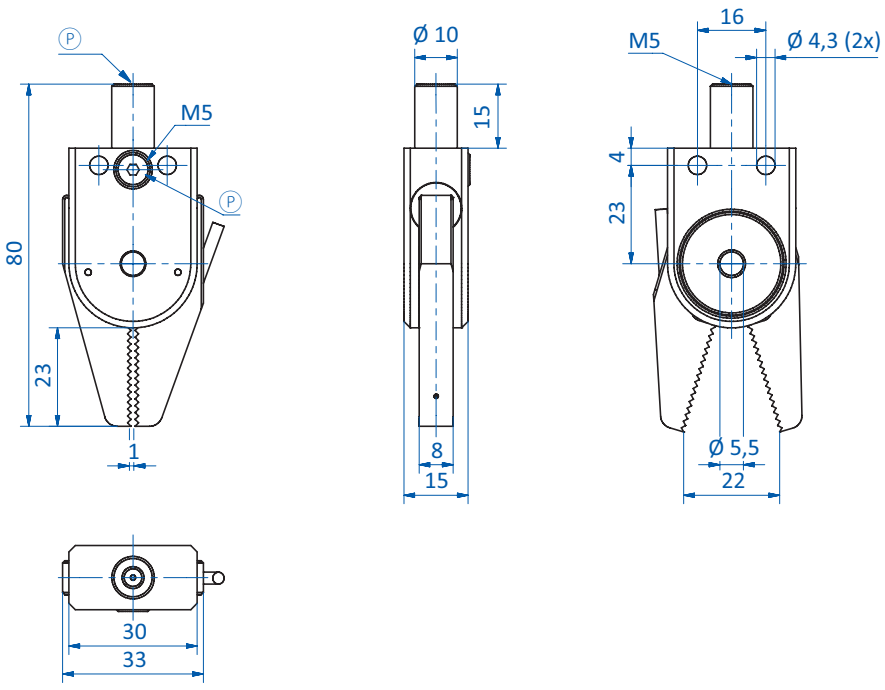

GR04.100-3N | GR04.100-3P

Ⓟ = Compressed air connection

Continued on the next page

info@hidrafluid.es
976 24 32 10

Dimensions

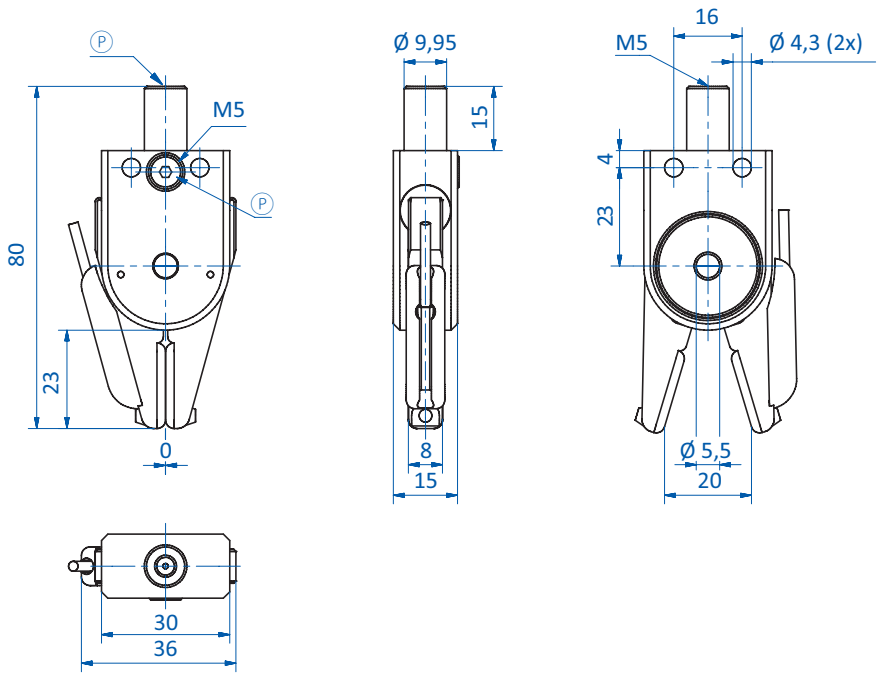

GR04.100H-2N | GR04.100H-2P

Ⓟ = Compressed air connection

FIPA challenge accepted
info@hidrafluid.es
976 24 32 10

Series 100 – sprue grippers, clamping diameter 10 mm – double-acting

Product notes

> Grippers with wide jaw opening for large gates
> Gap-free closing for flat gates
> Dual-action for short cycle times; opening and closing separately controllable
> Housings and gripper jaws consist of an anodized, high-strength aluminum alloy
> Double-acting
> Medium: filtered and oiled/non-oiled air

Technical data

Item no.	Jaw design	Operating pressure [bar (psi)]	Closing force at 6 bar (87 psi) [N]	Weight [g]
GR04.102	Standard	2.5 - 8 (36.3 - 116)	20	51

Dimensions

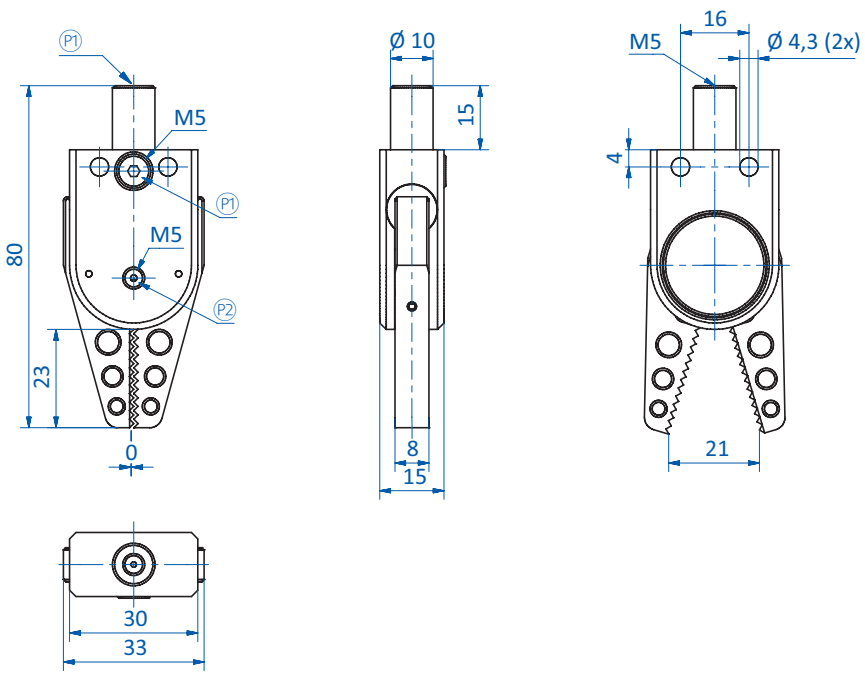

P1 = Compressed air supply (close) P2 = Compressed air supply (open)

info@hidrafluid.es
976 24 32 10

Series 130 – sprue grippers, clamping diameter 20 mm – single-acting

Product notes

> Grippers with strong gripping force and wide jaw opening for large gates
> Tight closing for flat gates
> GR04.130 with straight gripper jaws
> Housings and gripper jaws consist of an anodized, high-strength aluminum alloy
> Model B with rounded gripper jaws for large/inclined gates
> Model U for special gripper jaws; the closing force depends on the shape of the gripper jaws
> Model S with sawtooth profile for inclined gates
> Model H with replaceable HNBR pads for gentle handling
> Model XW with extra wide gripper jaws
> Index 1N and 1P for direct monitoring; large-area sensor operation, regardless of the position of the gate in the gripper
> Index 3N and 3P for indirect monitoring; signal triggering if no component has been gripped; no moving parts and thus increased mechanical stability
> Single-acting
> Medium: filtered and oiled/non-oiled air

Technical data

Item no.	Jaw design	Operating pressure [bar (psi)]	Sensor	Closing force at 6 bar (87 psi) [N]	Weight [g]	Accessories
GR04.130	Standard	2.5 - 8 (36.3 - 116)	--	95	133	--
GR04.130B	Sawtooth jaws round	2.5 - 8 (36.3 - 116)	--	95	131	--
GR04.130U	Universal	2.5 - 8 (36.3 - 116)	--	--	128	--
GR04.130H	HNBR pad	2.5 - 8 (36.3 - 116)	--	95	137	Extension tube: GR06.022 (p.90) HNBR pad: GR04.130C-4HNBR
GR04.130-1N	Standard	2.5 - 8 (36.3 - 116)	NPN	95	141	Extension tube: GR06.022 (p.90) Connector cable: 20.503 (p.410) Sensor: GS04.002 (p.408)
GR04.130-1P	Standard	2.5 - 8 (36.3 - 116)	PNP	95	141	Extension tube: GR06.022 (p.90) Connector cable: 20.503 (p.410) Sensor: GS04.001 (p.408)
GR04.130B-1N	Sawtooth jaws round	2.5 - 8 (36.3 - 116)	NPN	95	140	Extension tube: GR06.022 (p.90) Connector cable: 20.503 (p.410) Sensor: GS04.002 (p.408)
GR04.130B-1P	Sawtooth jaws round	2.5 - 8 (36.3 - 116)	PNP	95	140	Extension tube: GR06.022 (p.90) Connector cable: 20.503 (p.410) Sensor: GS04.001 (p.408)
GR04.130XW-3P	Xwide	2.5 - 8 (36.3 - 116)	PNP	95	139	Extension tube: GR06.022 (p.90) Connector cable: 20.503 (p.410) Sensor: GR04.203P (p.404)

info@hidrafluid.es
976 24 32 10

Dimensions

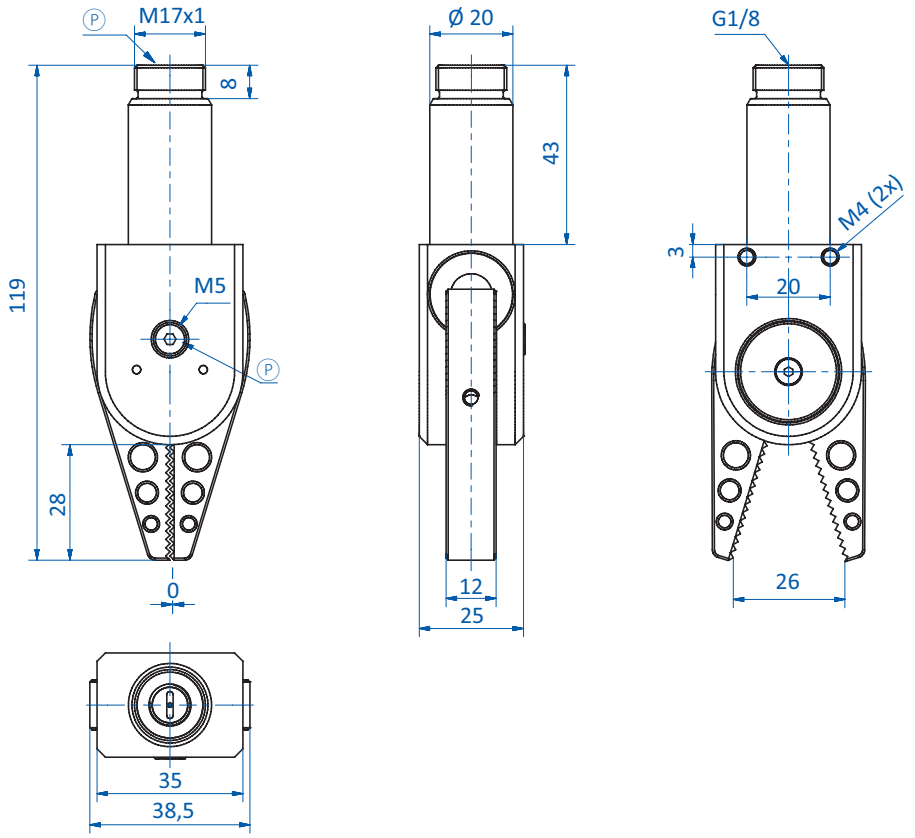

GR04.130

Ⓟ = Compressed air connection

Continued on the next page

info@hidrafluid.es
976 24 32 10

Dimensions

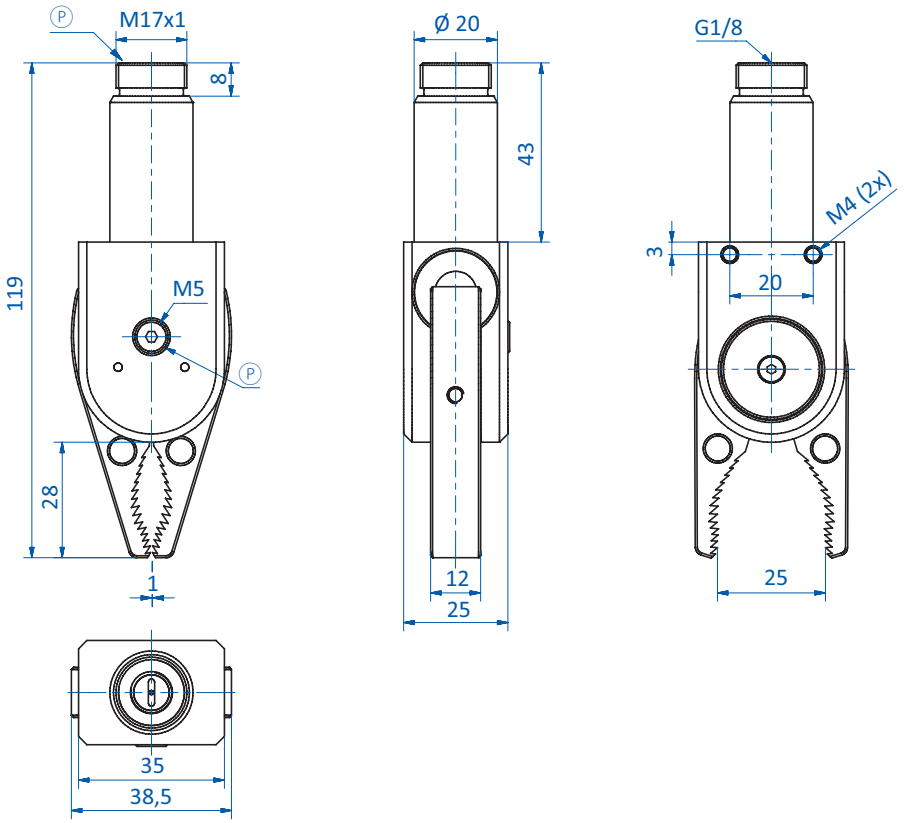

GR04.130B

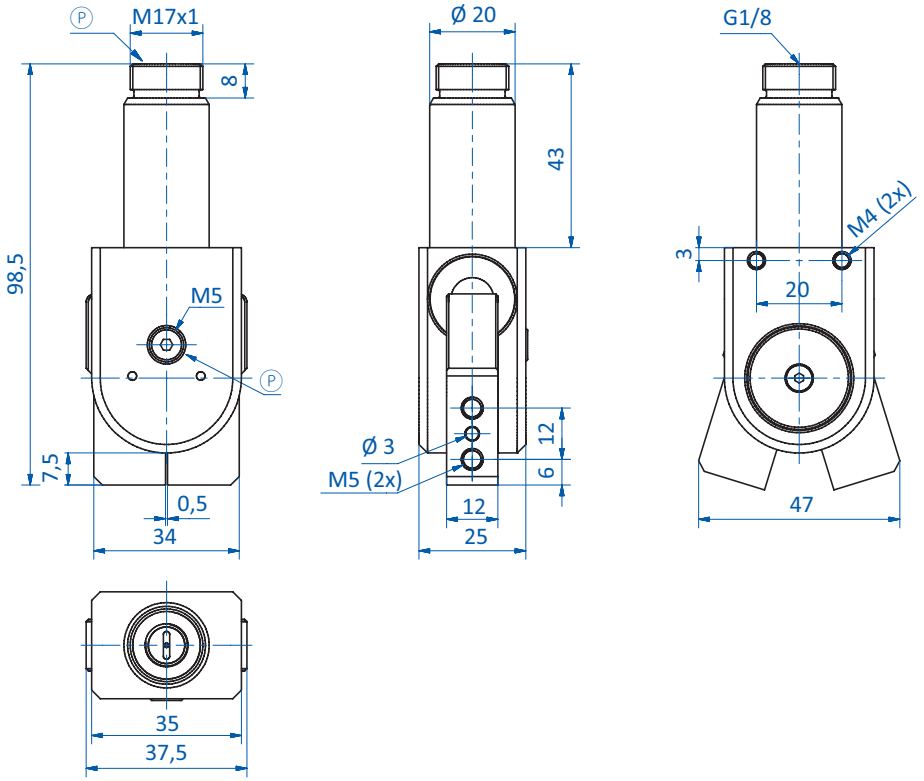

GR04.130U

P = Compressed air connection

FIPA challenge accepted
info@hidrafluid.es
976 24 32 10

Dimensions

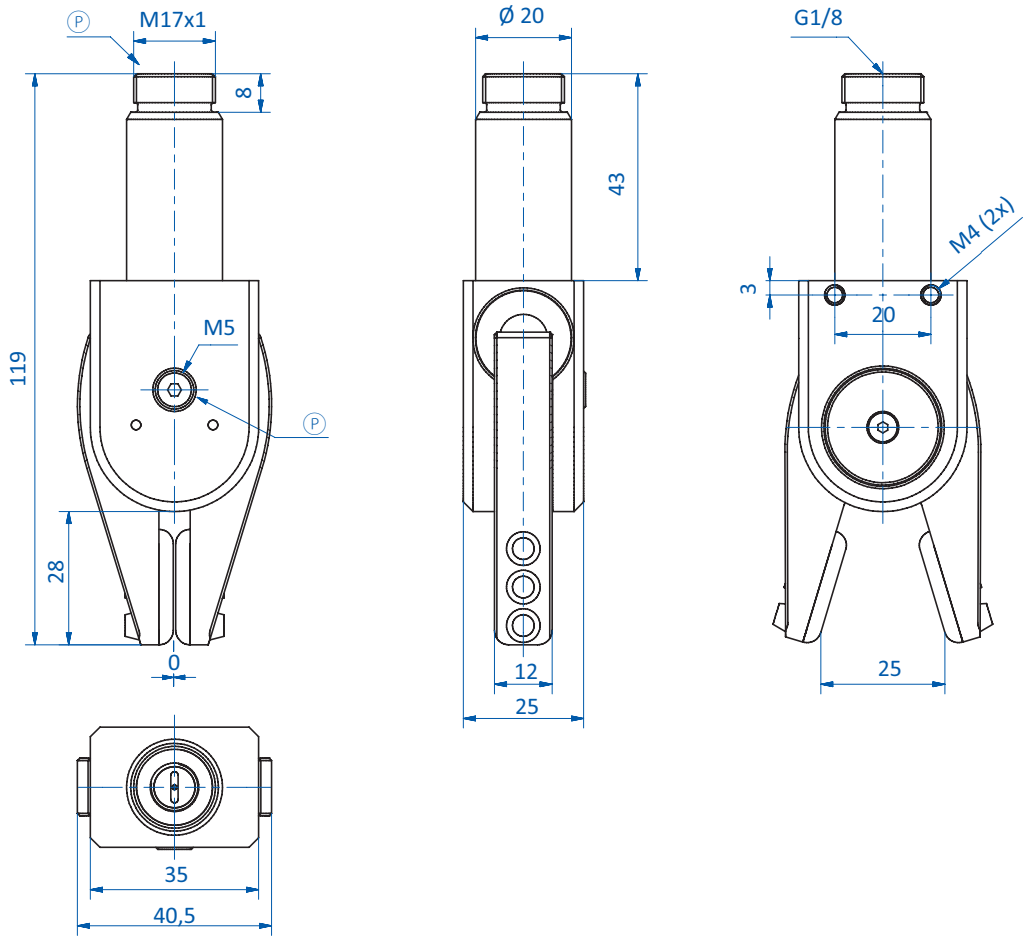

GR04.130H

Ⓟ = Compressed air connection

Continued on the next page

info@hidrafluid.es
976 24 32 10

Dimensions

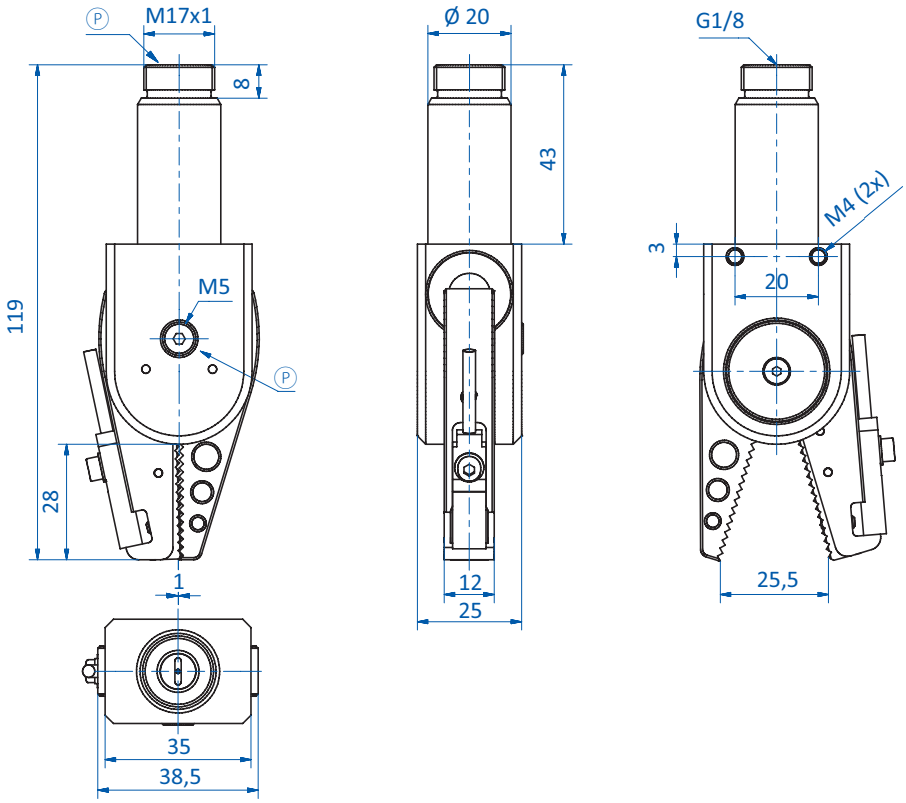

GR04.130-1N | GR04.130-1P

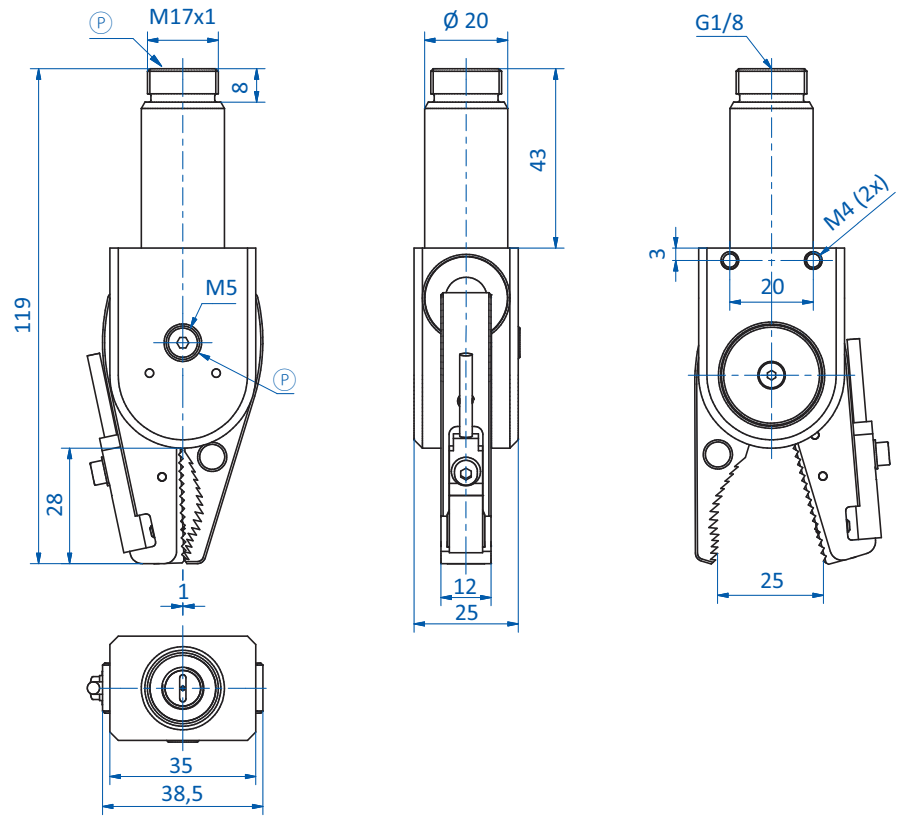

GR04.130B-1N | GR04.130B-1P

Ⓟ = Compressed air connection

FIPA challenge accepted
info@hidrafluid.es
976 24 32 10

Dimensions

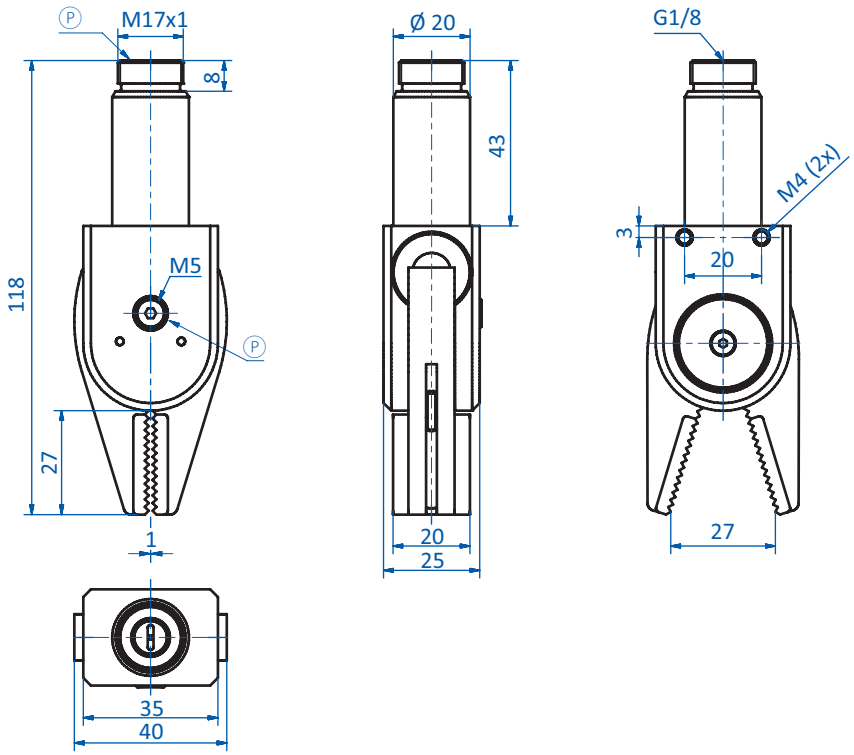

GR04.130XW-3P

Ⓟ = Compressed air connection

info@hidrafluid.es
976 24 32 10

Series 2016 – sprue grippers, without sensor

SELF-CENTERING

GR04.2016R with straight jaws

Sprue gripper GR04.2016H with HNBR pads

Product notes

> Clamping diameter 20 mm
> Grippers with wide opening jaws and high gripping force
> GR04.2016S with sawtooth jaws for a higher gripping force
> GR04.2016H with interchangeable HNBR pads for gentle gripping
> Easy assembly/disassembly of the gripper jaws
> Jaws made of zinc-plated steel
> If a sprue detection is needed please use the grippers GR04.2016RC or GR04.2016SC with direct part detection
> Body and jaws made of anodized aluminum
> Principle of operation: single-acting
> Medium: Filtered and oiled/unoiled air

Technical data

Item no.	Max. operating pressure [bar (psi)]	Closing force at 6 bar (87 psi) [N]	Weight [g]
GR04.2016R	6 (87)	52	148
GR04.2016S	6 (87)	52	148
GR04.2016H	6 (87)	52	148

Dimensions

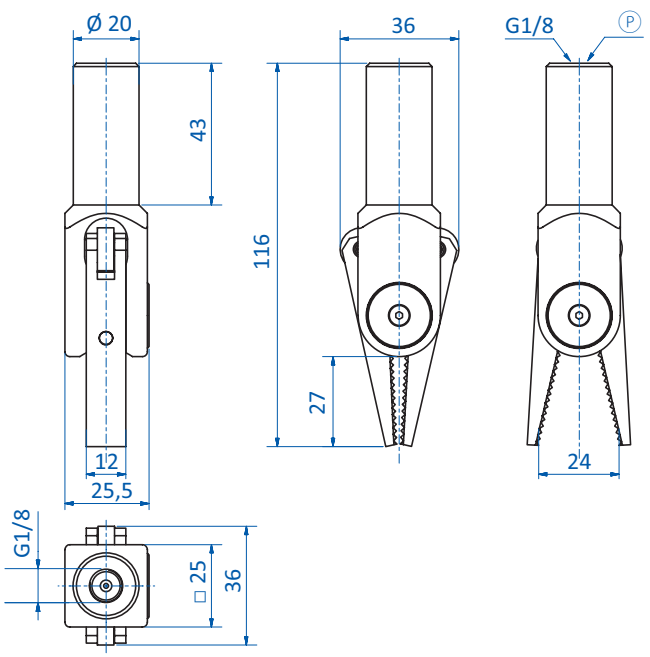

GR04.2016R

Ⓟ = Compressed air connection

info@hidrafluid.es
976 24 32 10

Dimensions

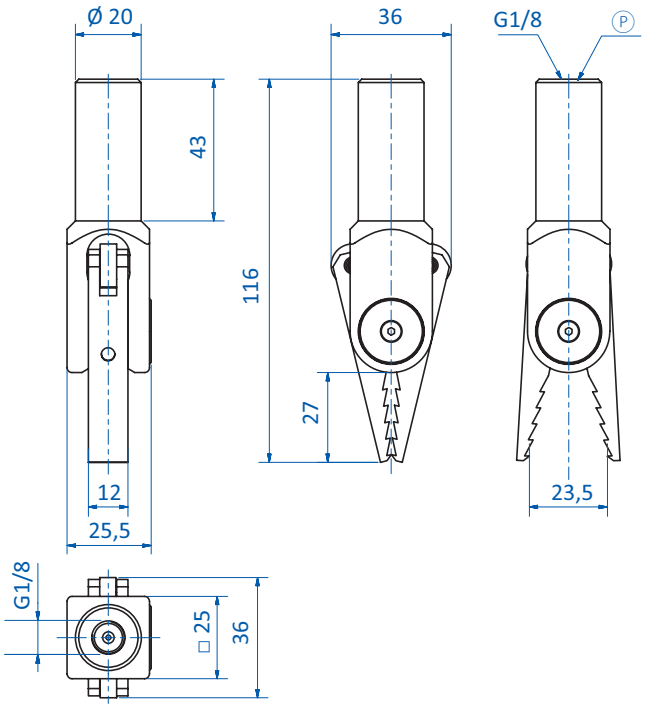

GR04.2016S

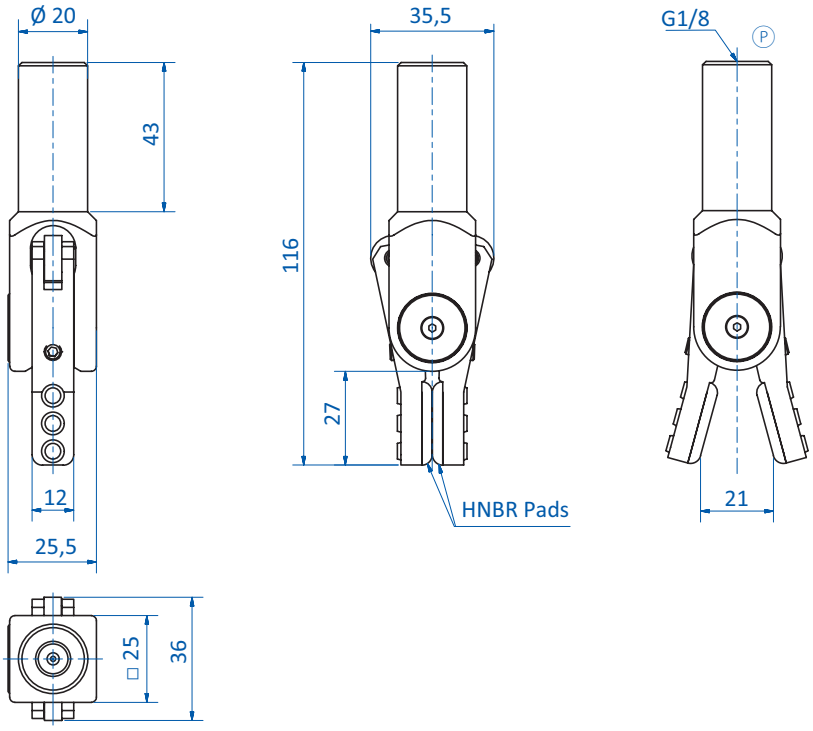

GR04.2016H

Ⓟ = Compressed air connection

info@hidrafluid.es
976 24 32 10

Series 2016 – sprue grippers, with direct sensing

SELF-CENTERING

GR04.2016RC with straight jaws

GR04.2016SC with sawtooth for a higher gripping force

Product notes

> Clamping diameter 20 mm
> Grippers with wide opening jaws and high gripping force
> Self-centering
> Large area sensor activation, regardless of sprue position
> Easy assembly/disassembly of the gripper jaws
> Jaws made of zinc-plated steel
> Body and jaws made of anodized aluminum
> Principle of operation: single-acting
> Medium: filtered and oiled/unoiled air

Technical data

Item no.	Max. operating pressure [bar (psi)]	Sensor	Closing force at 6 bar (87 psi) [N]	Weight [g]	Accessories
GR04.2016RC	6 (87)	PNP	52	165	Connector cable: 20.503 (p.410) Sensor: GS04.001 (p.408)
GR04.2016RC/NPN	6 (87)	NPN	52	165	Connector cable: 20.503 (p.410) Sensor: GS04.002 (p.408)
GR04.2016SC	6 (87)	PNP	52	168	Connector cable: 20.503 (p.410) Sensor: GS04.001 (p.408)
GR04.2016SC/NPN	6 (87)	NPN	52	168	Connector cable: 20.503 (p.410) Sensor: GS04.002 (p.408)

FIPA challenge accepted

info@hidrafluid.es
976 24 32 10

Dimensions

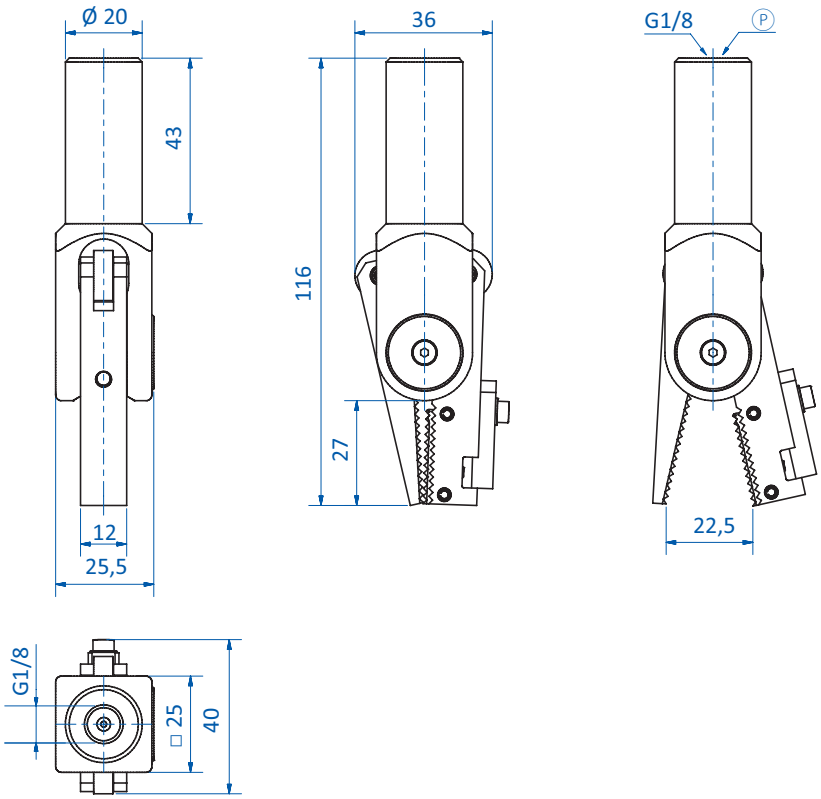

GR04.2016RC | GR04.2016RC/NPN

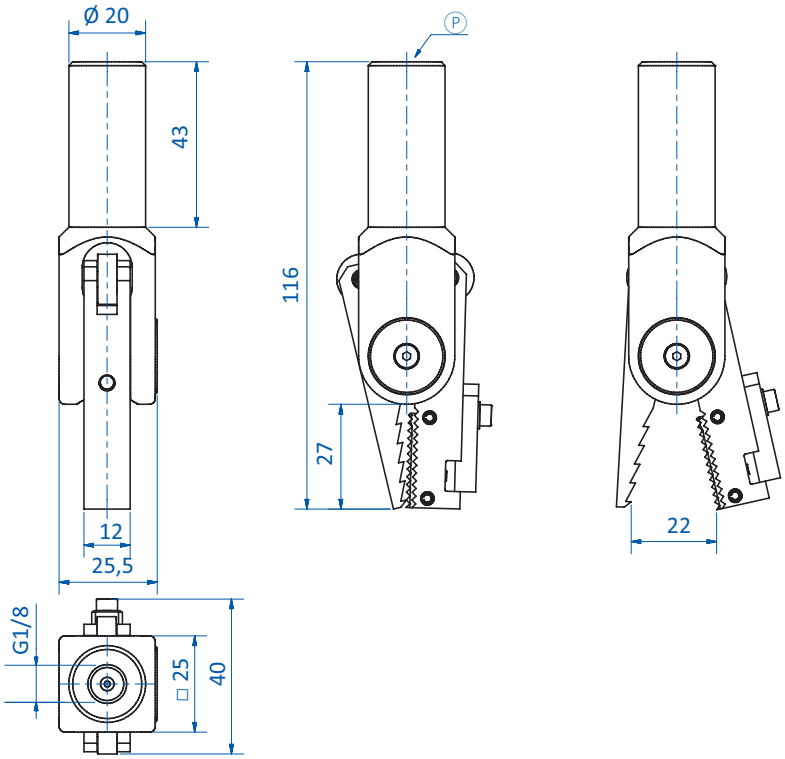

GR04.2016SC | GR04.2016SC/NPN

Ⓟ = Compressed air connection

info@hidrafluid.es
976 24 32 10

Series 140 – power grippers

Application example: gripping of plastic flaps

Product notes

> Clamping diameter 20 mm
> PNP or NPN sensors with 0.3 m cable, 3-pin M8 plug and extension cable 2 m with 3-pin M8 socket & free end, included
> Very high grip force
> Body and jaws made of anodized aluminum
> Principle of operation: single-acting
> Medium: filtered and oiled/unoiled air

Technical data

Item no.	Max. operating pressure [bar (psi)]	Sensor	Closing force at 6 bar (87 psi) [N]	Weight [g]	Accessories
GR04.140A	8 (116)	--	380	395	--
GR04.140B	8 (116)	PNP	380	405	Connector cable: 20.503 (p.410) Sensor: GS04.001 (p.408)
GR04.140B/NPN	8 (116)	NPN	380	405	Connector cable: 20.503 (p.410) Sensor: GS04.002 (p.408)

Installation example with side-mounted fitting

info@hidrafluid.es
976 24 32 10

Dimensions

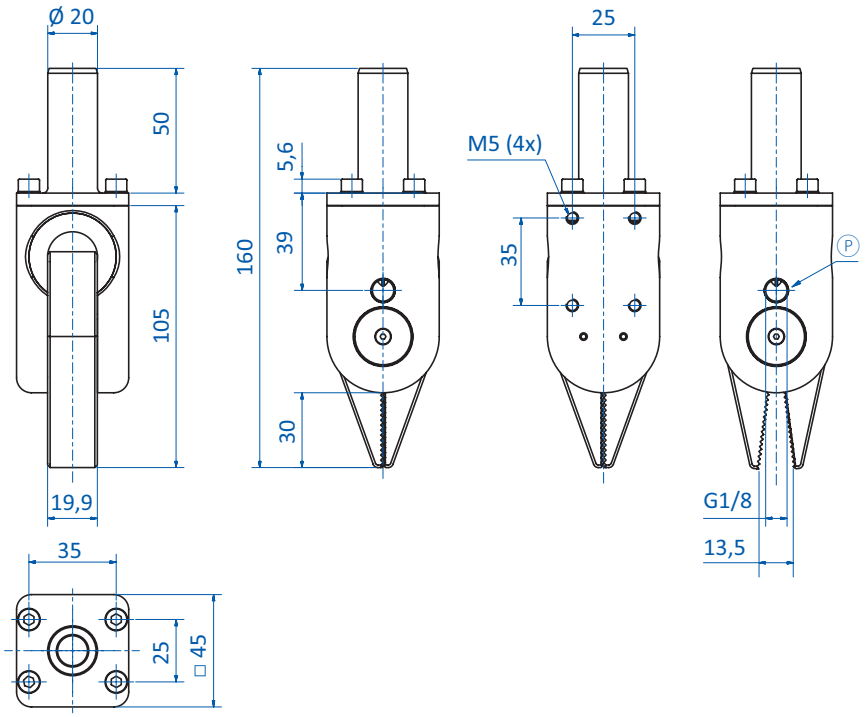

GR04.140A

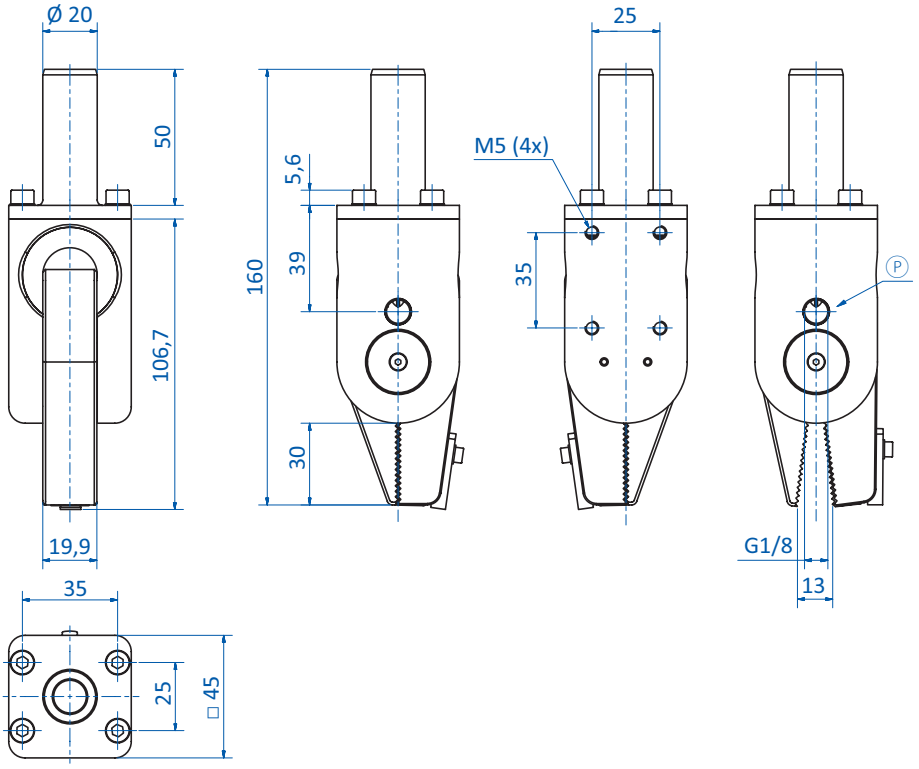

GR04.140B | GR04.140B/NPN

Ⓟ = Compressed air connection

info@hidrafluid.es
976 24 32 10

Series 840 – power grippers with stroke, clamping diameter 30 mm

DETECTS SPRUES LARGER 1 MM

Product notes

> Grippers with high gripping force and narrow closing gap for flat sprues
> Feed stroke (cylinder 1) moves gripper towards the mold for part removal
> Back stroke (cylinder 2) fully retracts gripper to enable undisturbed part release, e.g. on a conveyor belt
> Grippers are self-centering
> Medium: filtered and oiled/unoiled air
> Suitable for heavy-duty applications due to closed, coaxial cylinder guiding
> Part control via large area sensor activation, regardless of sprue position (GR04.140B, GR04.140B/NPN)
> Detection of stroke via optional cylinder sensors
> Easy exchange of jaws without snap-rings
> If required, the grippers can quickly be changed over to non-self-centering
> Included in scope of delivery of GR04.840B: sensor GR04.131-S1, resp. GR04.131-S2, cable 0.2 m, 3-pin M8 male connector, free end; extension cable 2 m, 3-pin M8 male connector, free end
> Please refer to "suitable sensors" for cylinder sensors

Technical data

Item no.	Operating pressure [bar (psi)]	Sensor	Closing force at 6 bar (87 psi) [N]	Stroke 1 [mm]	Stroke 2 [mm]	Weight [g]	Suitable sensors
GR04.840A-20	6 (87)	--	380	20	--	1,110	GR04.202N (p.404) GR04.202P (p.404) GR04.280N (p.404) GR04.280P (p.404)
GR04.840A-30	6 (87)	--	380	30	--	1,185	GR04.202N (p.404) GR04.202P (p.404) GR04.280N (p.404) GR04.280P (p.404)
GR04.840A-20-20	6 (87)	--	380	20	20	1,480	GR04.202N (p.404) GR04.202P (p.404) GR04.280N (p.404) GR04.280P (p.404)
GR04.840A-20-30	6 (87)	--	380	30	20	1,540	GR04.202N (p.404) GR04.202P (p.404) GR04.280N (p.404) GR04.280P (p.404)
GR04.840B-20	6 (87)	PNP	380	20	--	1,130	GS04.001 (p.408) GR04.202P (p.404) GR04.280P (p.404)
GR04.840B-30	6 (87)	PNP	380	30	--	1,200	GS04.001 (p.408) GR04.202P (p.404) GR04.280P (p.404)
GR04.840B-20-20	6 (87)	PNP	380	20	20	1,500	GS04.001 (p.408) GR04.202P (p.404) GR04.280P (p.404)
GR04.840B-20-30	6 (87)	PNP	380	30	20	1,560	GS04.001 (p.408) GR04.202P (p.404) GR04.280P (p.404)
GR04.840B-20/NPN	6 (87)	NPN	380	20	--	1,130	GS04.002 (p.408) GR04.202N (p.404) GR04.280N (p.404)
GR04.840B-30/NPN	6 (87)	NPN	380	30	--	1,200	GS04.002 (p.408) GR04.202N (p.404) GR04.280N (p.404)

FIPA challenge accepted

info@hidrafluid.es
976 24 32 10

Technical data

Item no.	Operating pressure [bar (psi)]	Sensor	Closing force at 6 bar (87 psi) [N]	Stroke 1 [mm]	Stroke 2 [mm]	Weight [g]	Suitable sensors
GR04.840B-20-20/NPN	6 (87)	NPN	380	20	20	1,500	GS04.002 (p.408) GR04.202N (p.404) GR04.280N (p.404)
GR04.840B-20-30/NPN	6 (87)	NPN	380	30	20	1,560	GS04.002 (p.408) GR04.202N (p.404) GR04.280N (p.404)

Dimensions

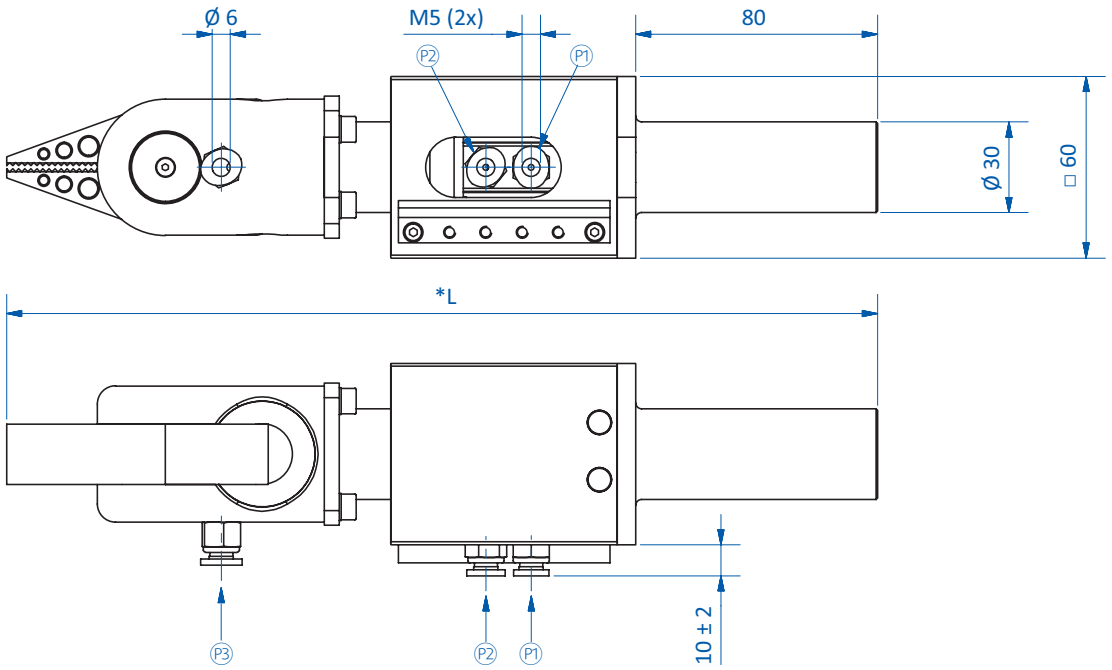

GR04.840A-20 | GR04.840A-30 | GR04.840B-20 | GR04.840B-30 | GR04.840B-20/NPN | GR04.840B-30/NPN

* = The length L refers to the gripper with retracted cylinders. Total length = L + stroke 1 (resp. stroke 1 + stroke 2). P1 = Compressed air connection cylinder extended P2 = Compressed air connection cylinder retracted P3 = Compressed air connection gripper

Continued on the next page

info@hidrafluid.es
976 24 32 10

Dimensions

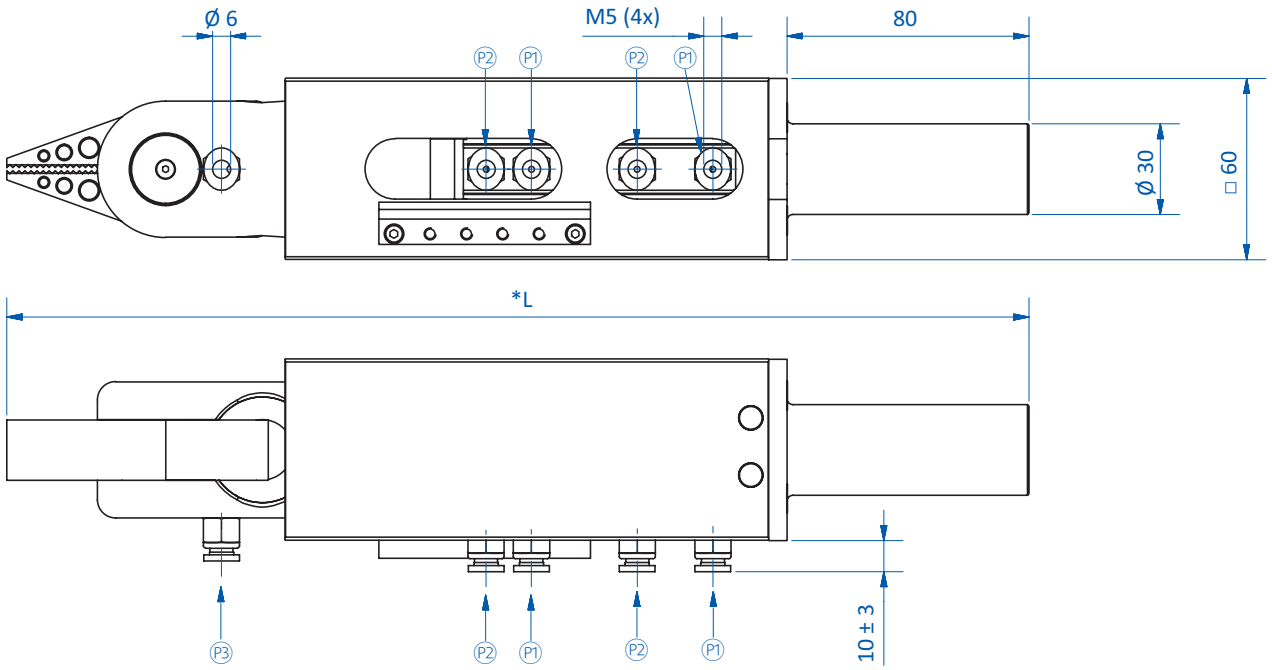

GR04.840A-20-20 | GR04.840A-20-30 | GR04.840B-20-20 | GR04.840B-20-30 | GR04.840B-20-20/NPN | GR04.840B-20-30/NPN

* = The length L refers to the gripper with retracted cylinders. Total length = L + stroke 1 (resp. stroke 1 + stroke 2). P1 = Compressed air connection cylinder extended P2 = Compressed air connection cylinder retracted P3 = Compressed air connection gripper

Item no.	L [mm]
GR04.840A-20	298
GR04.840A-30	308
GR04.840A-20-20	348
GR04.840A-20-30	358
GR04.840B-20	298
GR04.840B-30	308
GR04.840B-20-20	348
GR04.840B-20-30	358
GR04.840B-20/NPN	298
GR04.840B-30/NPN	308
GR04.840B-20-20/NPN	348
GR04.840B-20-30/NPN	358

FIPA challenge accepted
info@hidrafluid.es
976 24 32 10

Series 110 – sprue gripper with indirect sensing

Product notes

> Grippers with high gripping force and wide jaw opening
> Jaws with rough tooth pattern for parts that are difficult to demold
> Sprue detection via indirect sensing, signals when jaws are closed, because no part has been gripped
> Principle of operation: single-acting
> Sensor with 3-pole M8 plug and 0.6 m cable included in scope of delivery

Technical data

Item no.	Max. operating pressure [bar (psi)]	Sensor	Closing force at 6 bar (87 psi) [N]	Weight [g]	Accessories
GR04.111A	8 (116)	PNP*	95	135	Mounting bracket: GR04.196A (p.198) Sensor: GR04.111A-Sensor
GR04.111A/NPN	8 (116)	NPN*	95	135	Mounting bracket: GR04.196A (p.198) Sensor: GR04.111A-Sensor-NPN

Dimensions

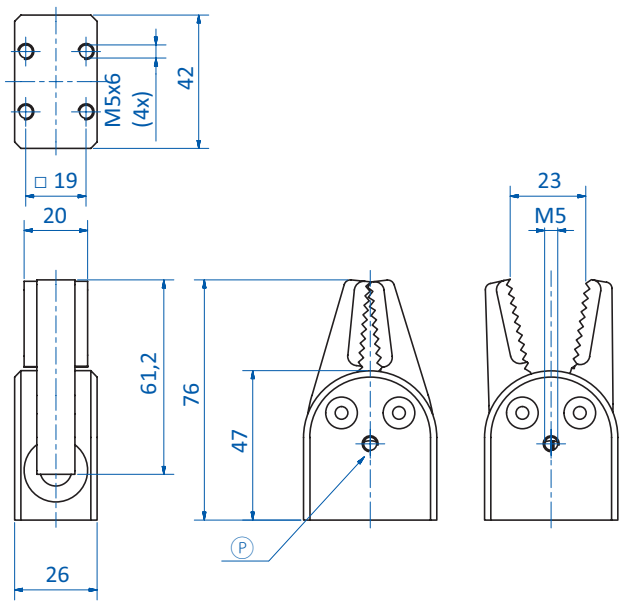

Wiring diagrams sensors

NPN

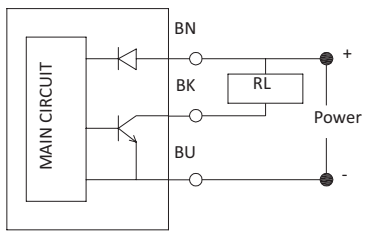

PNP

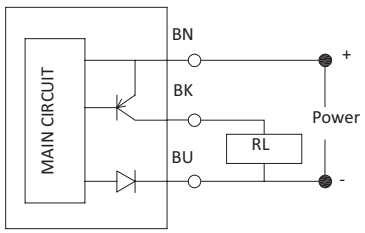

BN = Brown, BK = Black, BU = Blue

Ⓟ = Compressed air connection * = Sensing of parts larger 2 mm

info@hidrafluid.es
976 24 32 10

Series 110 – grippers

Product notes

> High grip force, extra wide jaw opening and gap-free closing allow for a wide range of sprue diameters to be gripped
> PNP or NPN sensors with 0.3 m cable, 3-pin M8 plug and extension cable 2 m with 3-pin M8 socket & free end, included
> Principle of operation: single-acting

Technical data

Item no.	Max. operating pressure [bar (psi)]	Sensor	Closing force on the jaw tip [N]	Minimum sprue thickness [mm]	Weight [g]	Suitable sensors
GR04.110A	8 (116)	PNP	95	1	130	GS04.001 (p.408)
GR04.110A/NPN	8 (116)	NPN	95	1	130	GS04.002 (p.408)
GR04.110B	8 (116)	--	95	1	130	--

Dimensions

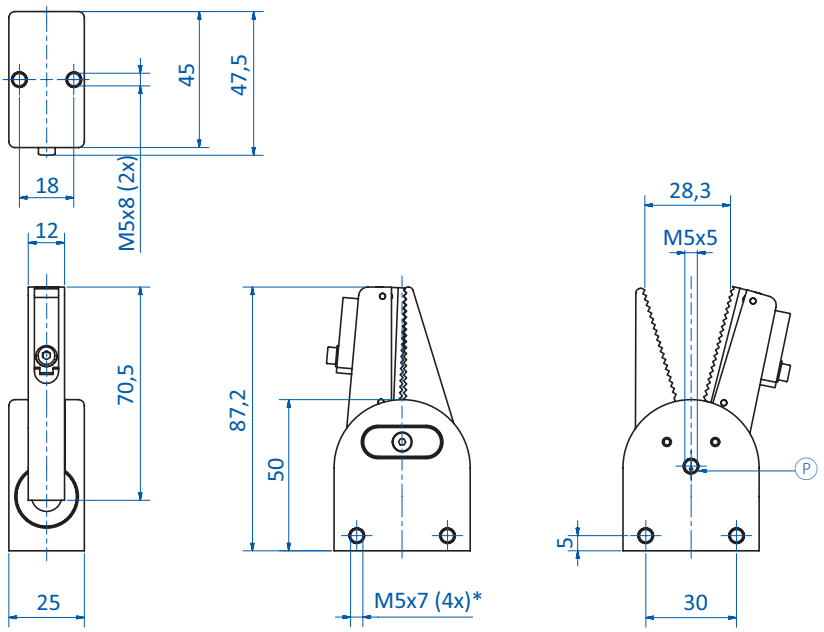

GR04.110A | GR04.110A/NPN

Ⓟ = Compressed air connection * = Fixing hole

info@hidrafluid.es
976 24 32 10

Dimensions

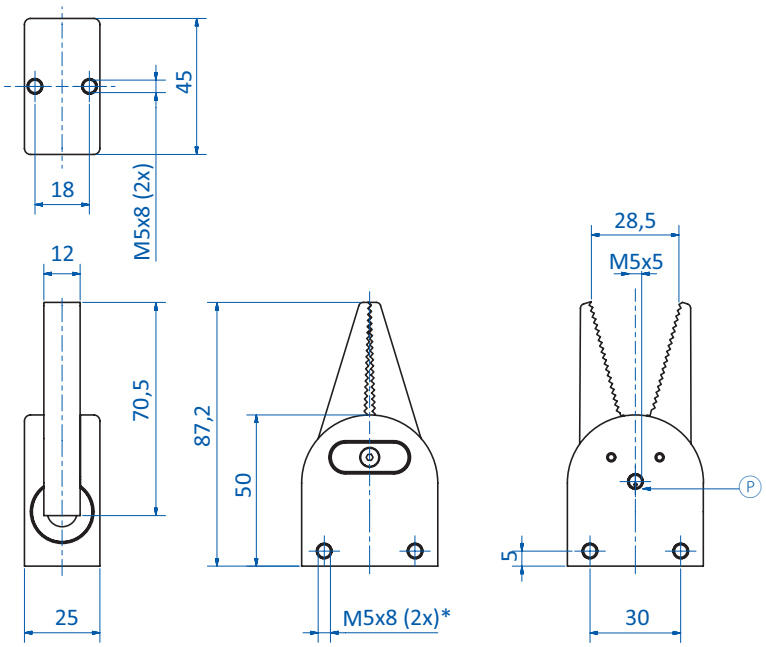

GR04.110B

Ⓟ = Compressed air connection * = Fixing hole

info@hidrafluid.es
976 24 32 10

Series 110 – grippers

Product notes

> High grip force, extra wide jaw opening and gap-free closing allow for a wide range of sprue diameters to be gripped
> Principle of operation: double-acting

Technical data

Item no.	Max. operating pressure [bar (psi)]	Closing force at 6 bar (87 psi) [N]	Weight [g]	Suitable fittings
GR04.110	8 (116)	66	135	GR04.197A (p.197)

Dimensions

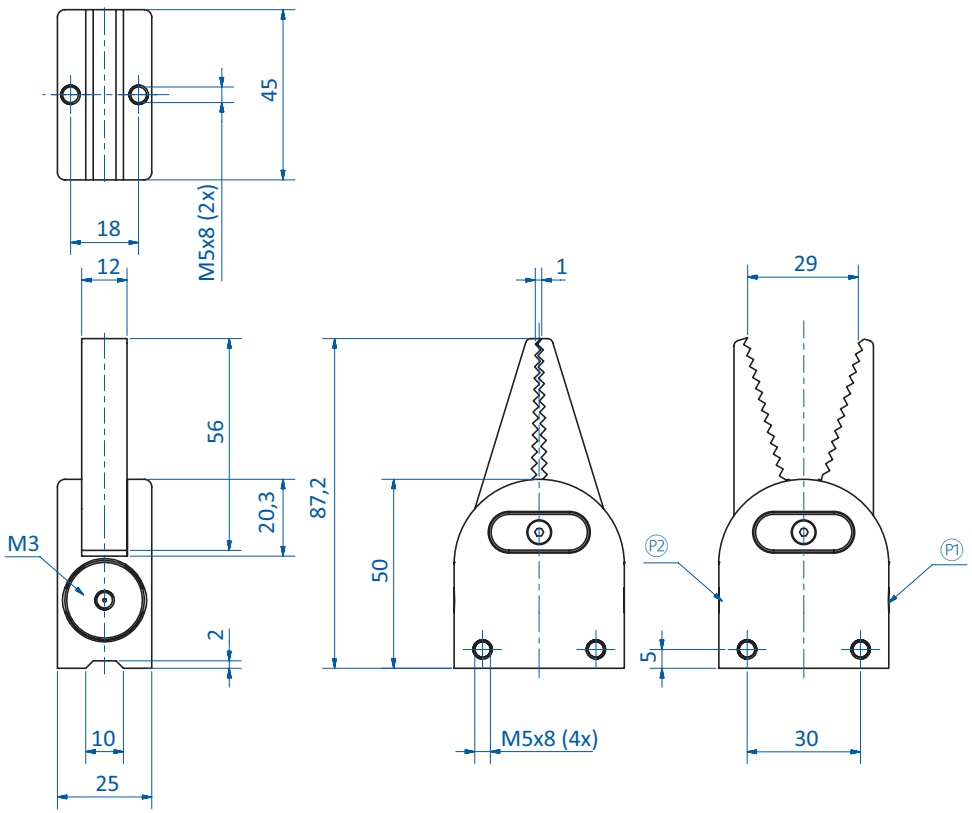

P1 = Compressed air supply (open) P2 = Compressed air supply (close)

info@hidrafluid.es
976 24 32 10

Mounting brackets for Series 110 – grippers

Technical data

Item no.	Weight [g]
GR04.197A	47
GR04.197B	47

Dimensions

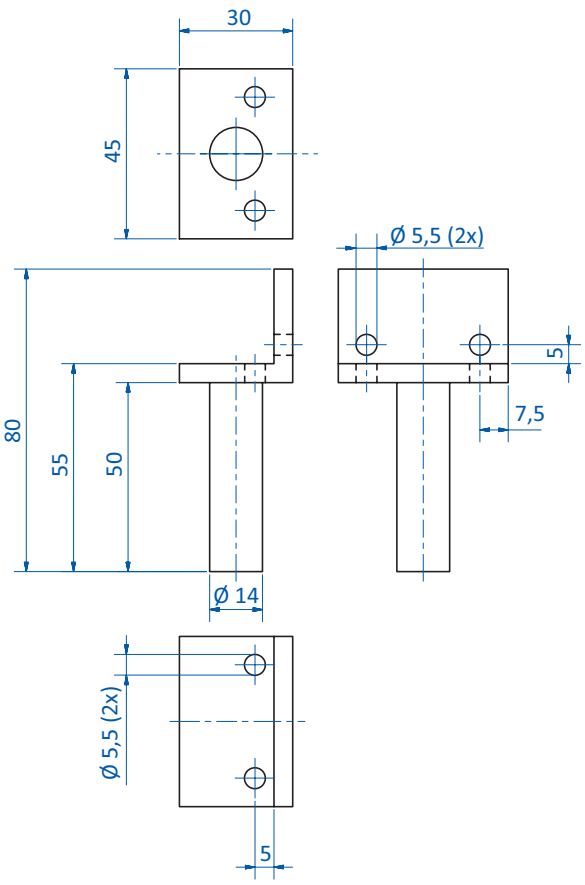

GR04.197A

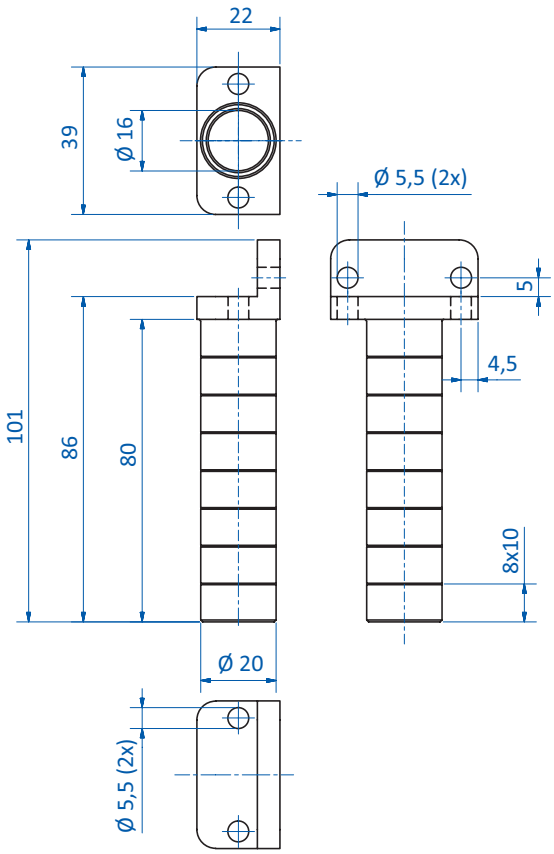

GR04.197B

info@hidrafluid.es
976 24 32 10

Mounting brackets for Series 110 – grippers

Technical data

Item no.	Weight [g]
GR04.196A	27

Dimensions

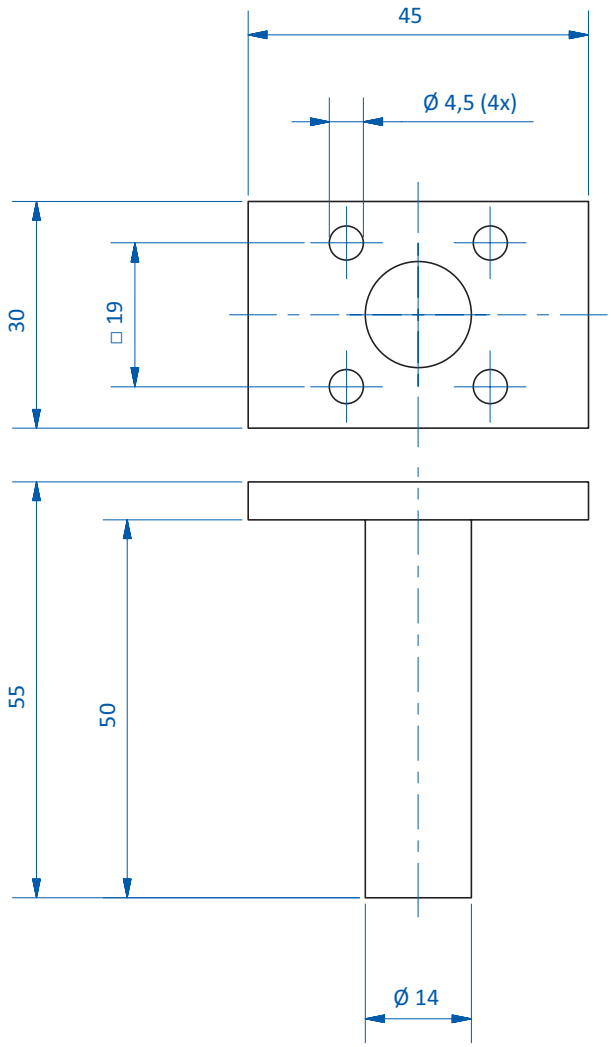

FIPA challenge accepted
info@hidrafluid.es
976 24 32 10

Notes:

info@hidrafluid.es
976 24 32 10

95° Gripper fingers

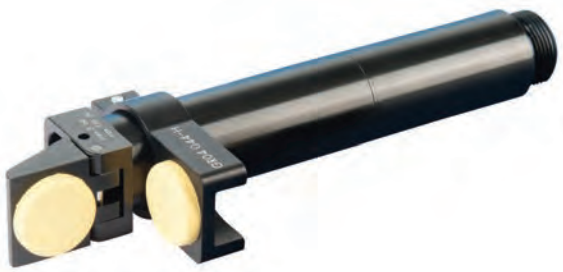

Gripper finger with HNBR pad and HNBR stop element for soft gripping

Product notes

> Single-acting, spring return
> Body and jaws made of anodized aluminum alloy
> GR04.034 & GR04.040: optional sensors for monitoring piston position
> Gripper finger with central hole for mounting optional HNBR pad

Technical data

Item no.	GR04.034	GR04.040	GR04.044
Operating pressure [bar (psi)]	2 - 8 (29 - 116)	2 - 8 (29 - 116)	2 - 8 (29 - 116)
Clamping Ø [mm]	14	20	20
Angle stroke [°]	95	95	95
Sensor nut	--	Yes	--
Closing force at 6 bar (87 psi) [N]	24	70	70
Weight [g]	25	82	60
Accessories	HNBR pad: GR04.034-HNBR Sensor: GR04.198 (p.404) Sensor: GR04.198/NPN (p.404) Sensor mounting bracket: GR04.038S (p.204)	HNBR pad: GR04.044-HNBR Sensor: GR04.198 (p.404) Sensor: GR04.198/NPN (p.404)	HNBR pad: GR04.044-HNBR

Application example with sensor

info@hidrafluid.es
976 24 32 10

Dimensions

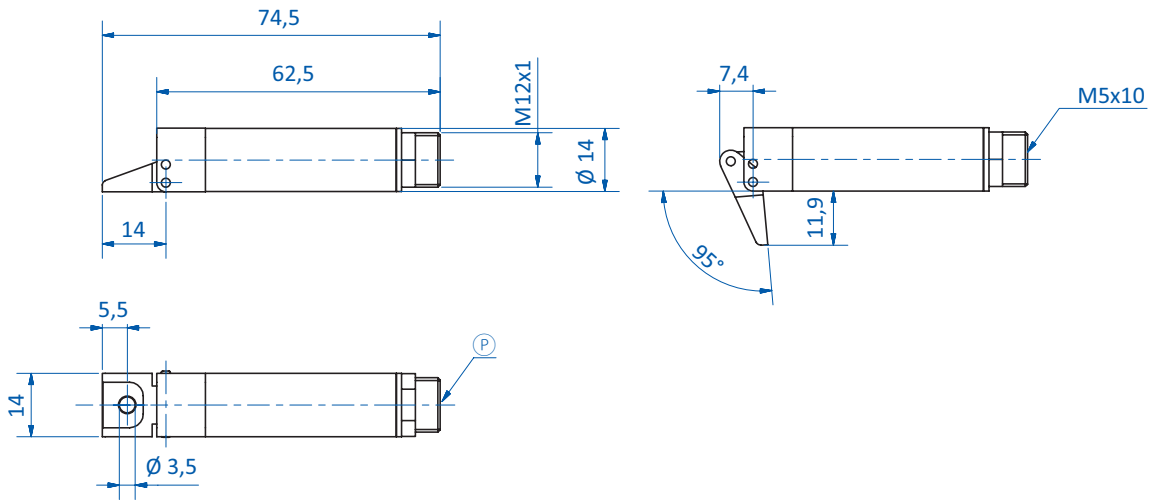

GR04.034

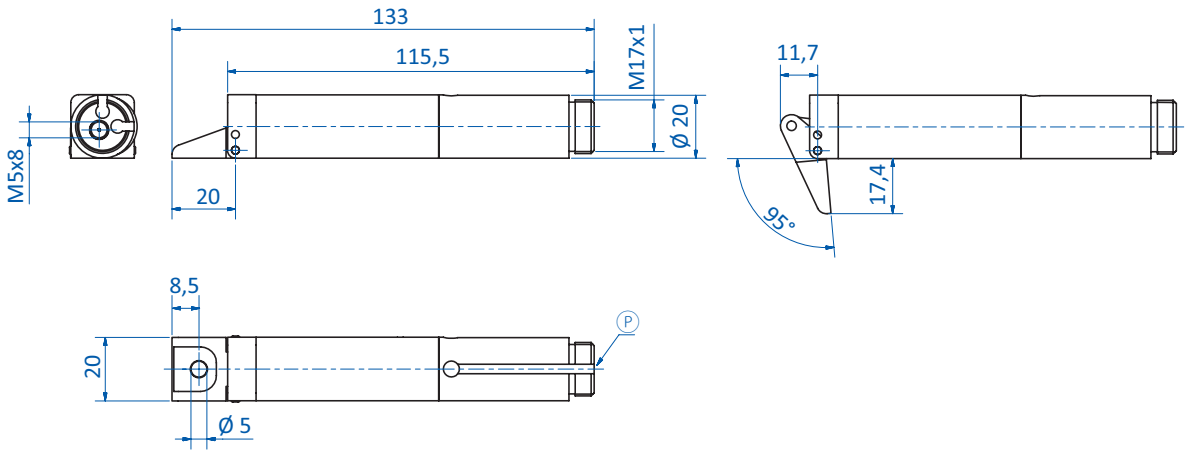

GR04.040

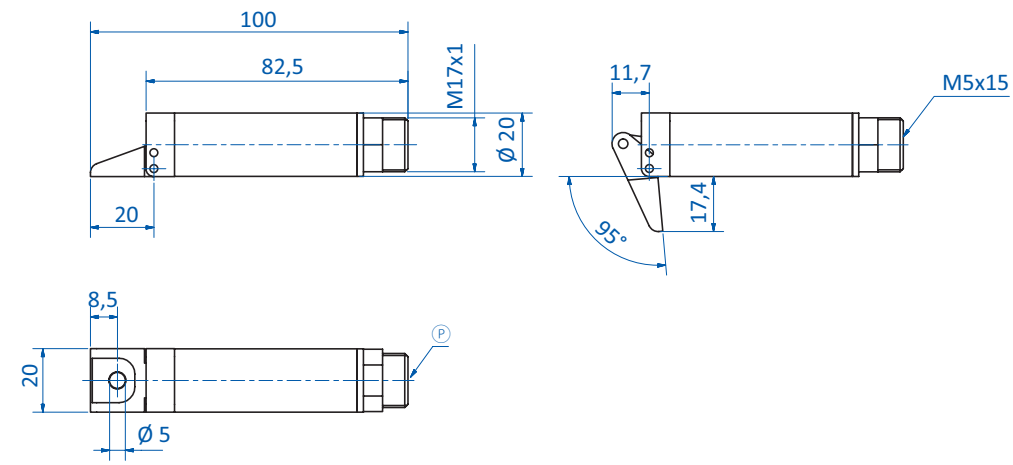

GR04.044

Ⓟ = Compressed air connection

info@hidrafluid.es
976 24 32 10

35° Gripper Fingers

Product notes

> Single-acting, spring return
> Body and jaws made of anodized aluminum alloy
> GR04.035 & GR04.041: optional sensors for monitoring piston position

Technical data

Item no.	GR04.035	GR04.041	GR04.045
Operating pressure [bar (psi)]	2 - 8 (29 - 116)	2 - 8 (29 - 116)	2 - 8 (29 - 116)
Clamping Ø [mm]	14	20	20
Angle stroke [°]	35	35	35
Sensor nut	--	Yes	--
Closing force at 6 bar (87 psi) [N]	23	65	65
Weight [g]	25	86	65
Accessories	Sensor: GR04.198 (p.404) Sensor: GR04.198/NPN (p.404) Sensor mounting bracket: GR04.038S (p.204)	Sensor: GR04.198 (p.404) Sensor: GR04.198/NPN (p.404)	--

Dimensions

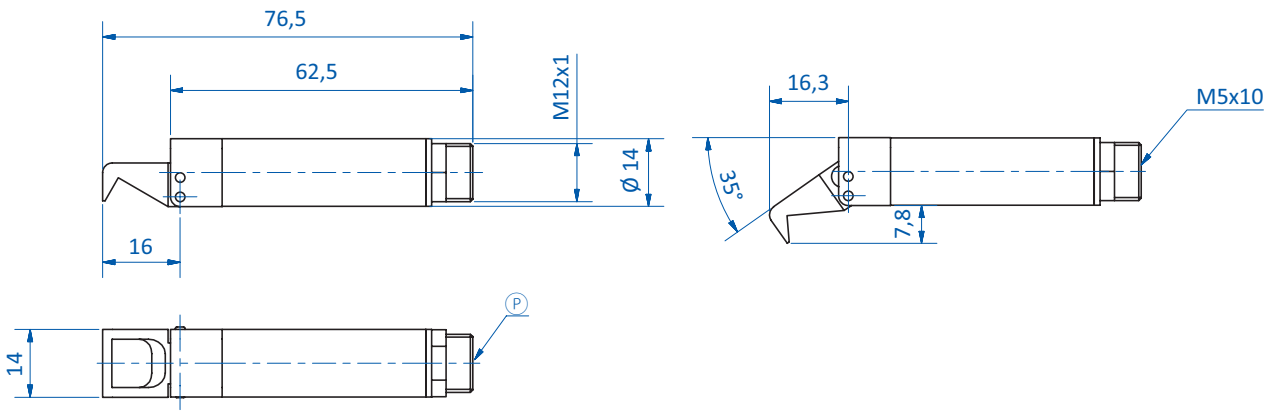

GR04.035

Ⓟ = Compressed air connection

info@hidrafluid.es
976 24 32 10

Dimensions

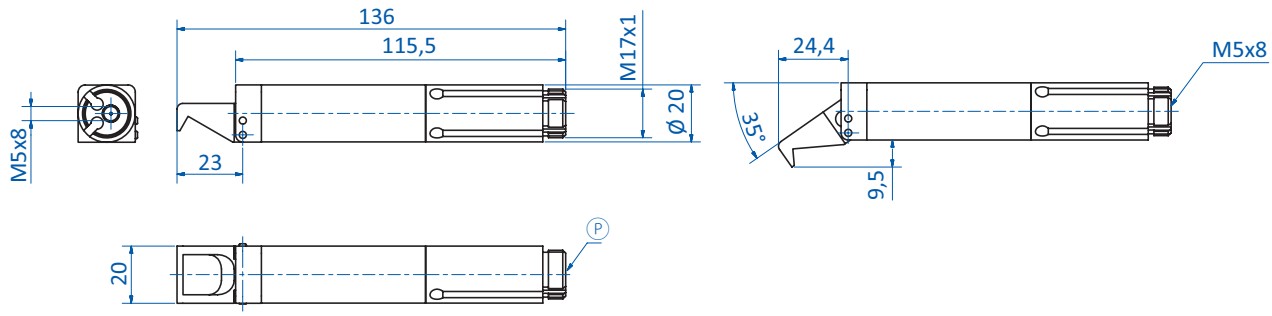

GR04.041

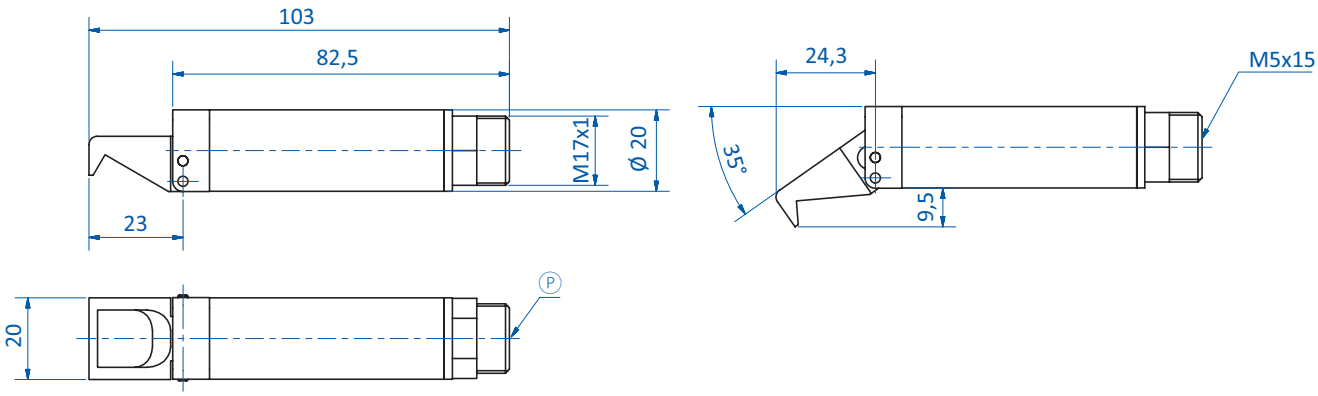

GR04.045

Ⓟ = Compressed air connection

info@hidrafluid.es
976 24 32 10

Sensor mounting bracket for gripper fingers, diameter 14 mm

Product notes

> Made of anodized aluminum

Technical data

Item no.	Suitable for gripper fingers	Clamping Ø [mm]	Weight [g]	Suitable sensors
GR04.038S	GR04.034, GR04.035	14	6	GR04.198 (p.404) GR04.198/NPN (p.404)

Dimensions

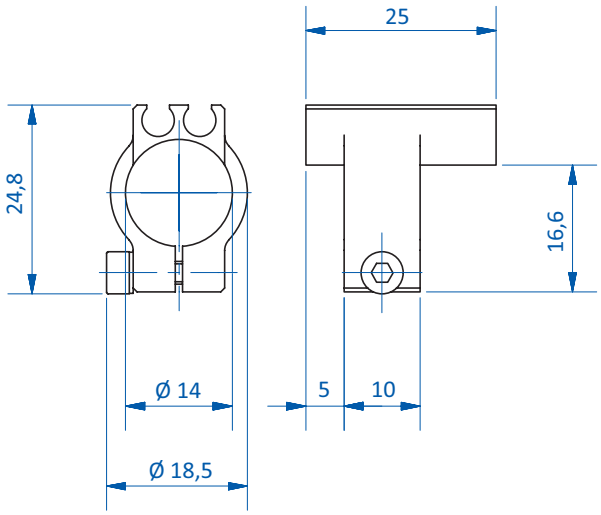

info@hidrafluid.es
976 24 32 10

Gripper finger guide

Product notes

> Part protection during demolding

Technical data

Item no.	Suitable for gripper fingers	Clamping Ø [mm]	Weight [g]	Suitable finger grippers
GR04.037	GR04.034, GR04.035	14	12	GR04.034 (p.200) GR04.035 (p.202)
GR04.047	GR04.040, GR04.041, GR04.044, GR04.045	20	19	GR04.040 (p.200) GR04.041 (p.202) GR04.044 (p.200) GR04.045 (p.202)

Dimensions

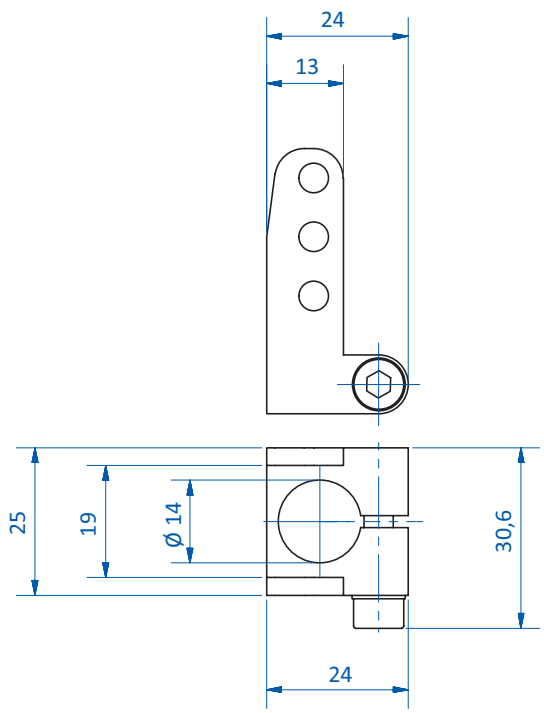

GR04.037

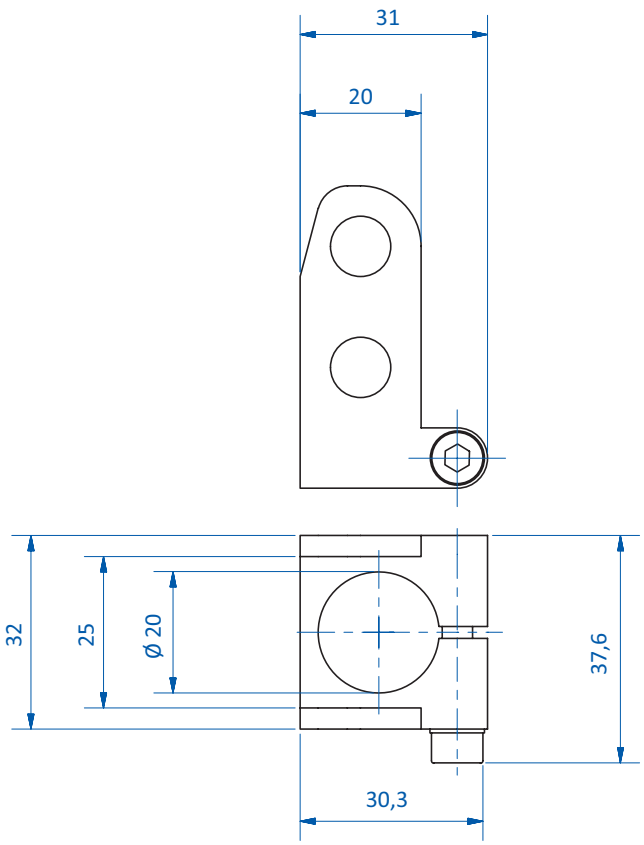

GR04.047

info@hidrafluid.es
976 24 32 10

Stop elements for gripper fingers

GR04.036 and GR04.046

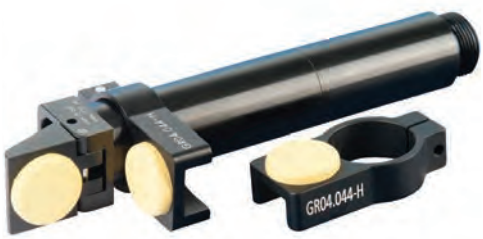

GR04.034-H and GR04.044-H with HNBR pad

Product notes

> Made of POM
> Can be used in conjunction with guide elements
> GR04.034-H & GR04.044-H: with HNBR pads for gentle gripping of sensitive components, temperature range 0 - 160 °C (32 - 320 °F) for short term contact – up to 30 seconds

Technical data

Item no.	Suitable for gripper fingers	Clamping Ø [mm]	Weight [g]	Replacement parts
GR04.036	GR04.034, GR04.035	14	11	--
GR04.046	GR04.040, GR04.041, GR04.044, GR04.045	20	16	--
GR04.034-H	GR04.034, GR04.035	14	6	GR04.034-HNBR
GR04.044-H	GR04.040, GR04.041, GR04.044, GR04.045	20	13	GR04.044-HNBR

Dimensions

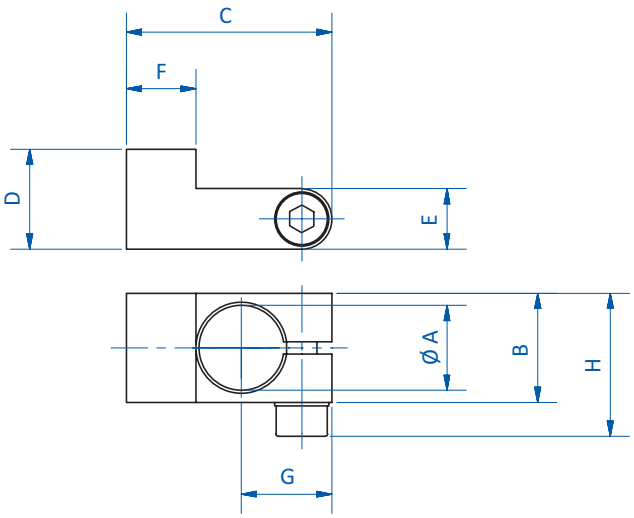

GR04.036 | GR04.046

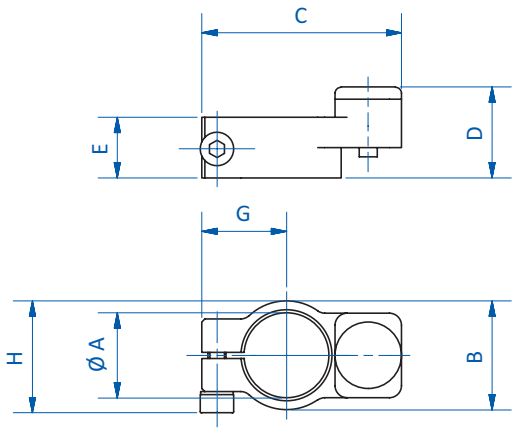

GR04.034-H | GR04.044-H

Item no.	Ø A [mm]	B [mm]	H [mm]	C [mm]	D [mm]	E [mm]	F [mm]	G [mm]
GR04.036	14	18	23.6	34	16.5	10	11.5	15
GR04.046	20	24	29.6	45	14.5	10	16.5	18
GR04.034-H	14	18	18.5	33	15	10	--	14
GR04.044-H	20	24	24	44.5	13	10	--	17

info@hidrafluid.es
976 24 32 10

Application examples

> Gripper finger with stop element without HNBR pad

> Gripper finger with stop element with HNBR pad

info@hidrafluid.es
976 24 32 10

Extension tubes

Product notes

> Compatible with locator pins, finger grippers and sprue grippers

Technical data

Item no.	Clamping Ø [mm]	Weight [g]	Suitable locator pins
GR06.020	10	10	GR06.001 (p.89)
GR06.021A	14	22	GR06.002A (p.89)
GR06.022	20	28	GR06.003 (p.89)

Dimensions

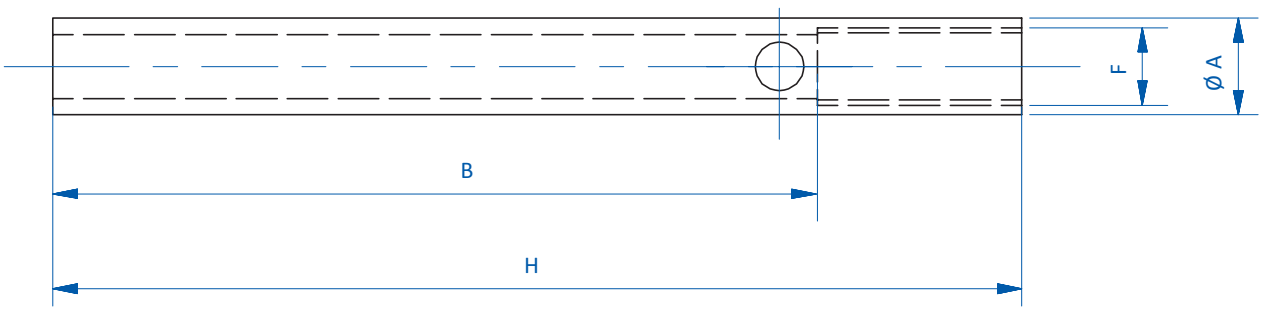

Item no.	F	Ø A [mm]	B [mm]	H [mm]
GR06.020	M8x1	10	87	100
GR06.021A	M12x1	14	82	100
GR06.022	M17x1	20	82	100

FIPA challenge accepted
info@hidrafluid.es
976 24 32 10

2-finger parallel grippers

Product notes

> Gripper with high gripping force
> Double-acting for inside/outside gripping and short duty cycles
> Single-acting: normally open (NO), compressed air for closing, opening via return spring
> Body and jaws made of high-strength aluminum alloy
> Options
  - Base jaws for customization
  - Sensors for monitoring gripper action via piston position
> Medium: filtered and oiled/unoiled air
> PNP and NPN sensors:
  - C-slot (90° angle): GR04.202P, GR04.202N
  - C-slot (straight, short design): GR04.280P, GR04.280N
  - T-slot (straight): GR04.203P, GR04.203N
> Connector cable for sensors:
  - 20.503: 3-pole M8, cable straight, length 2,500 mm, open wire
  - 20.507: 3-pole M8, cable 90°, length 2,000 mm, open end
  - 20.570: 3-pole M8, length 1,500 mm, end with plug 3-pole M8

Technical data

Item no.	Principle of operation	Operating pressure [bar (psi)]	Piston diameter [mm]	Stroke per gripper jaw [mm]	Closing force at 5 bar (72,5 psi) [N]	Opening force at 5 bar (72,5 psi) [N]	Max. operating frequency [1/min]	Operating temperature [°C (°F)]	Weight [g]	Accessories
GR04.122-10	Double-acting	3 - 7 (43.5 - 101.5)	10	2	16	11	180	-10 - 60 (14 - 140)	120	Sensor: GR04.203N (p.404) Sensor: GR04.203P (p.404) Connector cable: 20.503 (p.410) Connector cable: 20.507 (p.410) Connector cable: 20.570 (p.410) Mounting bracket: GR06.050 (p.240)
GR04.122-10S	Single-acting	3 - 7 (43.5 - 101.5)	10	2	16	11	180	-10 - 60 (14 - 140)	120	
GR04.122-16	Double-acting	3 - 7 (43.5 - 101.5)	16	3	44	33	180	-10 - 60 (14 - 140)	160	Sensor: GR04.202N (p.404) Sensor: GR04.202P (p.404) Sensor: GR04.203N (p.404) Sensor: GR04.203P (p.404) Sensor: GR04.280N (p.404) Sensor: GR04.280P (p.404) Connector cable: 20.503 (p.410) Connector cable: 20.507 (p.410) Connector cable: 20.570 (p.410) Mounting bracket: GR06.051 (p.240)
GR04.122-16S	Single-acting	3 - 7 (43.5 - 101.5)	16	3	44	33	180	-10 - 60 (14 - 140)	160	

Continued on the next page

info@hidrafluid.es
976 24 32 10

Technical data

Item no.	Principle of operation	Operating pressure [bar (psi)]	Piston diameter [mm]	Stroke per gripper jaw [mm]	Closing force at 5 bar (72,5 psi) [N]	Opening force at 5 bar (72,5 psi) [N]	Max. operating frequency [1/min]	Operating temperature [°C (°F)]	Weight [g]	Accessories
GR04.122-20	Double-acting	3 - 7 (43.5 - 101.5)	20	5	65	40	180	-10 - 60 (14 - 140)	300	Sensor: GR04.202N (p.404) Sensor: GR04.202P (p.404) Sensor: GR04.203N (p.404) Sensor: GR04.203P (p.404) Sensor: GR04.280N (p.404) Sensor: GR04.280P (p.404) Connector cable: 20.503 (p.410) Connector cable: 20.507 (p.410) Connector cable: 20.570 (p.410) Mounting bracket: GR06.052 (p.240)
GR04.122-20S	Single-acting	3 - 7 (43.5 - 101.5)	20	5	65	40	180	-10 - 60 (14 - 140)	300	
GR04.122-25	Double-acting	3 - 7 (43.5 - 101.5)	25	7	105	66	180	-10 - 60 (14 - 140)	365	Sensor: GR04.202N (p.404) Sensor: GR04.202P (p.404) Sensor: GR04.203N (p.404) Sensor: GR04.203P (p.404) Sensor: GR04.280N (p.404) Sensor: GR04.280P (p.404) Connector cable: 20.503 (p.410) Connector cable: 20.507 (p.410) Connector cable: 20.570 (p.410) Mounting bracket: GR06.053 (p.240)
GR04.122-25S	Single-acting	3 - 7 (43.5 - 101.5)	25	7	105	66	180	-10 - 60 (14 - 140)	365	
GR04.122-32	Double-acting	3 - 7 (43.5 - 101.5)	32	11	225	156	60	-10 - 60 (14 - 140)	860	Sensor: GR04.202N (p.404) Sensor: GR04.202P (p.404) Sensor: GR04.203N (p.404) Sensor: GR04.203P (p.404) Sensor: GR04.280N (p.404) Sensor: GR04.280P (p.404) Connector cable: 20.503 (p.410) Connector cable: 20.507 (p.410) Connector cable: 20.570 (p.410) Mounting bracket: GR06.054 (p.240)
GR04.122-32S	Single-acting	3 - 7 (43.5 - 101.5)	32	11	225	156	60	-10 - 60 (14 - 140)	860	
GR04.122-40	Double-acting	3 - 7 (43.5 - 101.5)	40	15	320	255	60	-10 - 60 (14 - 140)	950	Sensor: GR04.202N (p.404) Sensor: GR04.202P (p.404) Sensor: GR04.203N (p.404) Sensor: GR04.203P (p.404) Sensor: GR04.280N (p.404) Sensor: GR04.280P (p.404) Connector cable: 20.503 (p.410) Connector cable: 20.507 (p.410) Connector cable: 20.570 (p.410) Mounting bracket: GR06.055 (p.240)
GR04.122-40S	Single-acting	3 - 7 (43.5 - 101.5)	40	15	320	255	60	-10 - 60 (14 - 140)	950	

Distance to gripping point (* see diagrams)

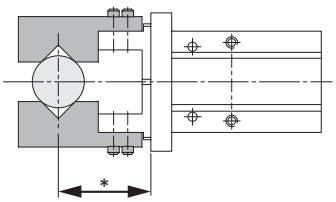

FIPA challenge accepted
info@hidrafluid.es
976 24 32 10

Dimensions

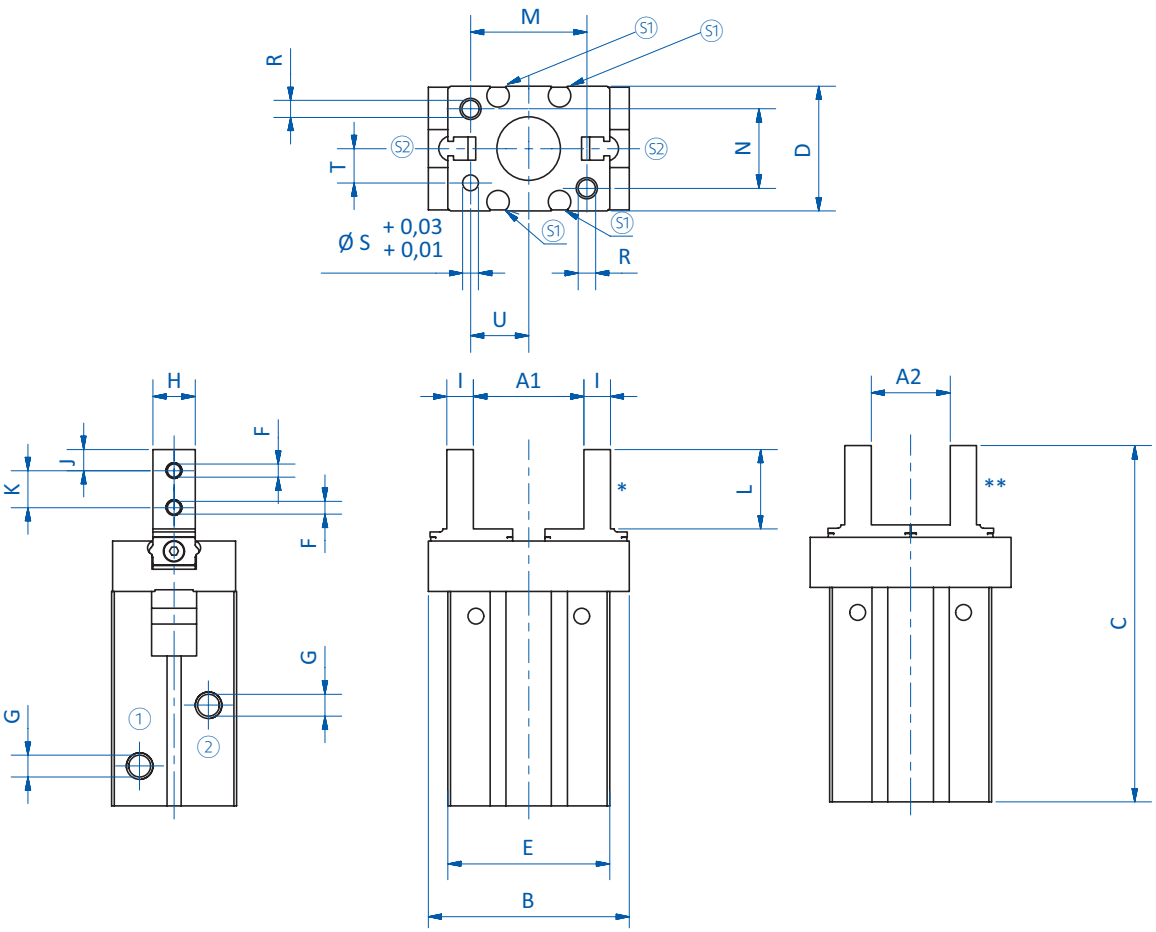

S1 = Sensor slot for GR04.202 and GR04.280 S2 = Sensor slot for GR04.203 1 = Compressed air supply (open) 2 = Compressed air supply (close)
* = Gripper jaw opened ** = Gripper jaw closed

Item no.	A1 [mm]	A2 [mm]	B [mm]	C [mm]	D [mm]	E [mm]	F	G	H [mm]	I [mm]	J [mm]	K [mm]	L [mm]	M [mm]	N [mm]	R	Ø S [mm]	T [mm]	U [mm]
GR04.122-10	15.2	11.2	29	57	16.4	23	M2,5	M3	5	4	3	5.7	12	18	12	M3	2	5.2	7.6
GR04.122-10S	15.2	11.2	29	57	16.4	23	M2,5	M3	5	4	3	5.7	12	18	12	M3	2	5.2	7.6
GR04.122-16	20.9	14.9	38	67.3	23.6	30.6	M3	M5	8	5	4	7	15	22	15	M4	3	6.5	11
GR04.122-16S	20.9	14.9	38	67.3	23.6	30.6	M3	M5	8	5	4	7	15	22	15	M4	3	6.5	11
GR04.122-20	26.3	16.3	50	84.8	27.6	42	M4	M5	10	8	5	9	20	32	18	M5	4	7.5	16.8
GR04.122-20S	26.3	16.3	50	84.8	27.6	42	M4	M5	10	8	5	9	20	32	18	M5	4	7.5	16.8
GR04.122-25	33.3	19.3	63	102.7	33.6	52	M5	M5	12	10	6	12	25	40	22	M6	4	10	21.8
GR04.122-25S	33.3	19.3	63	102.7	33.6	52	M5	M5	12	10	6	12	25	40	22	M6	4	10	21.8
GR04.122-32	48	26	97	113	40	60	M6	M5	15	12	7	14	29	46	26	M6	5	12	23
GR04.122-32S	48	26	97	113	40	60	M6	M5	15	12	7	14	29	46	26	M6	5	12	23
GR04.122-40	60	30	119	139	48	72	M8	M5	18	14	9	17	36	56	32	M8	5	14	29
GR04.122-40S	60	30	119	139	48	72	M8	M5	18	14	9	17	36	56	32	M8	5	14	29

Continued on the next page

info@hidrafluid.es
976 24 32 10

Diagrams

> Opening force as a function of distance to gripping point and feed pressure

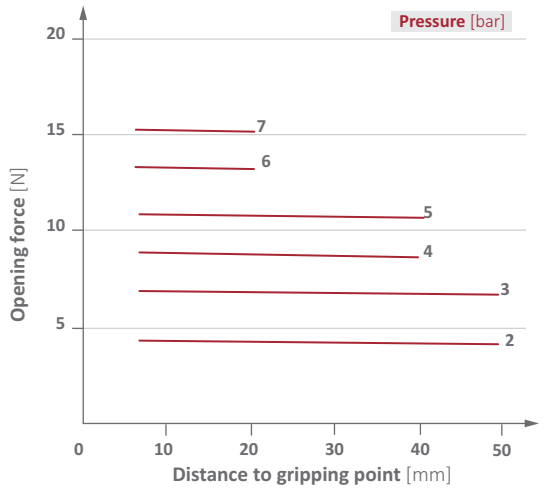

GR04.122-10 | GR04.122-10S

> Closing force as a function of distance to gripping point and feed pressure

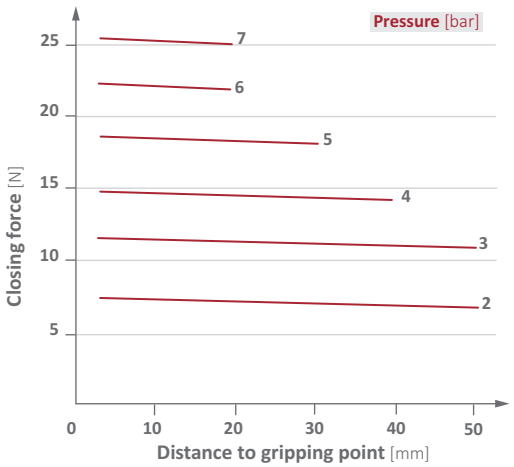

GR04.122-10 | GR04.122-10S

> Opening force as a function of distance to gripping point and feed pressure

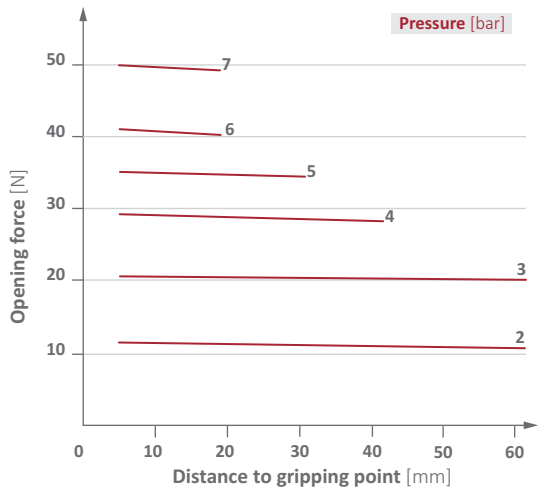

GR04.122-16 | GR04.122-16S

> Closing force as a function of distance to gripping point and feed pressure

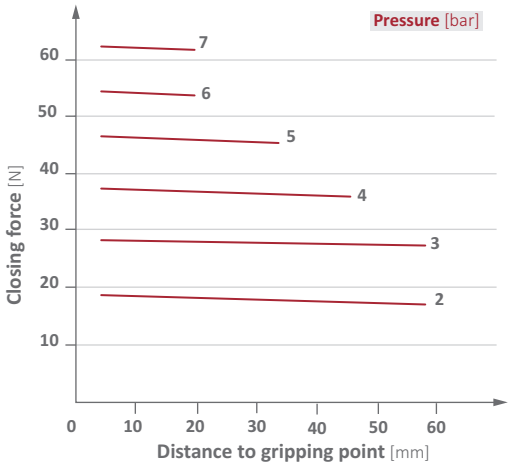

GR04.122-16 | GR04.122-16S

> Opening force as a function of distance to gripping point and feed pressure

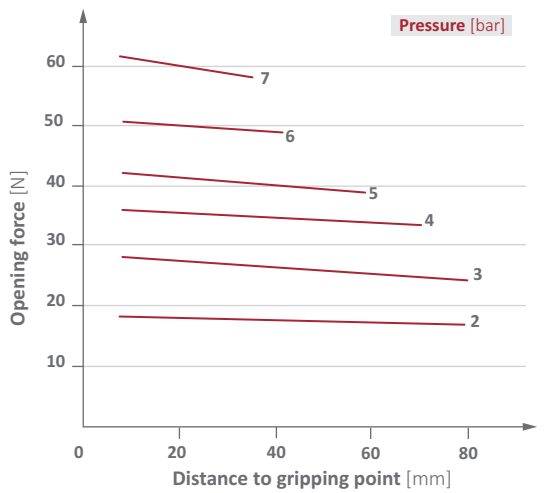

GR04.122-20 | GR04.122-20S

> Closing force as a function of distance to gripping point and feed pressure

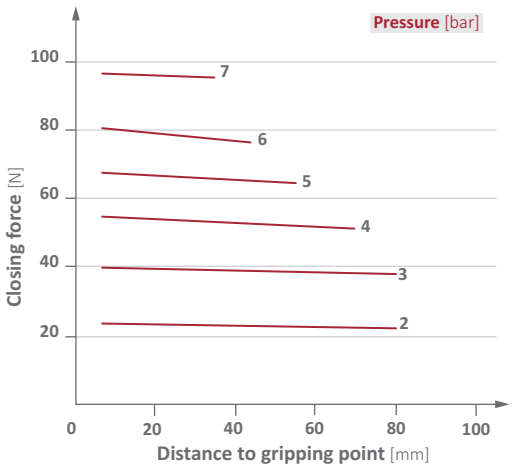

GR04.122-20 | GR04.122-20S

info@hidrafluid.es
976 24 32 10

Diagrams

> Opening force as a function of distance to gripping point and feed pressure

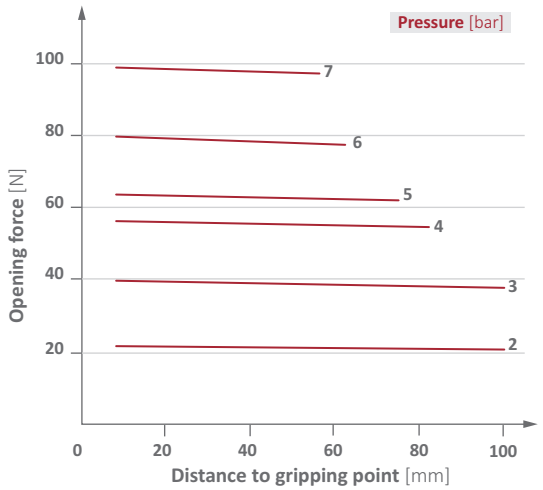

GR04.122-25 | GR04.122-25S

> Closing force as a function of distance to gripping point and feed pressure

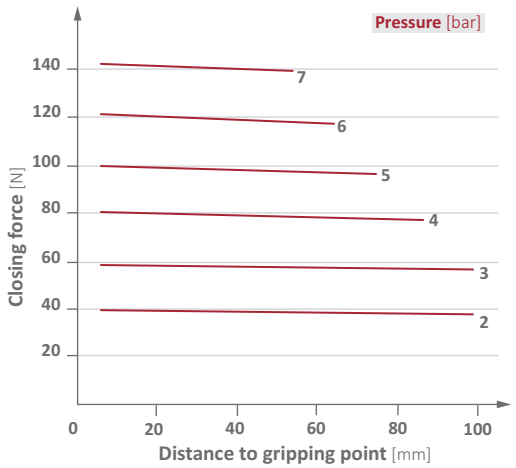

GR04.122-25 | GR04.122-25S

> Opening force as a function of distance to gripping point and feed pressure

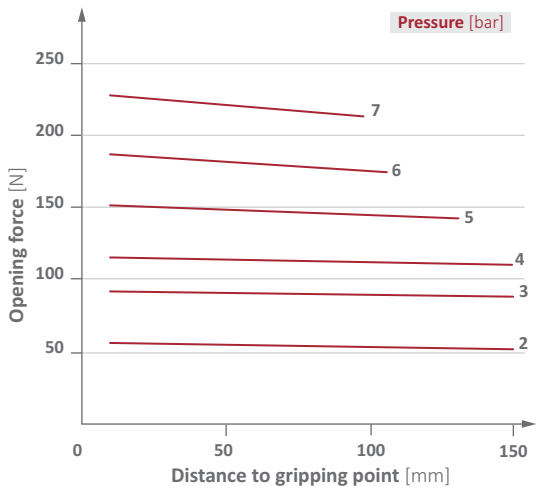

GR04.122-32 | GR04.122-32S

> Closing force as a function of distance to gripping point and feed pressure

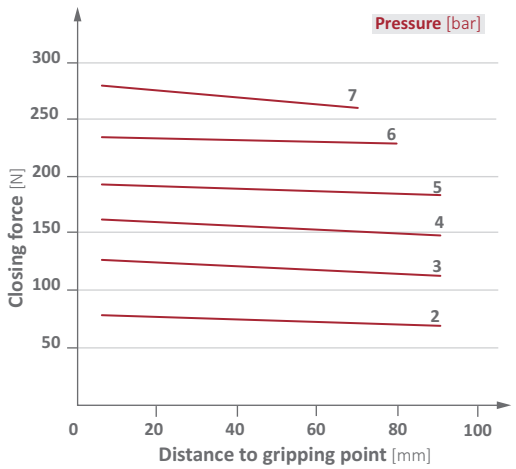

GR04.122-32 | GR04.122-32S

> Opening force as a function of distance to gripping point and feed pressure

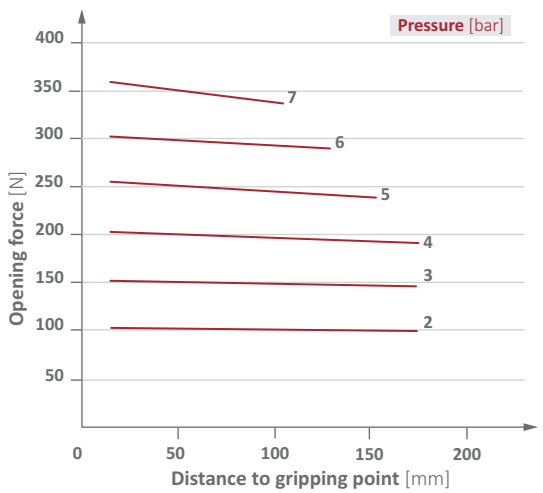

GR04.122-40 | GR04.122-40S

> Closing force as a function of distance to gripping point and feed pressure

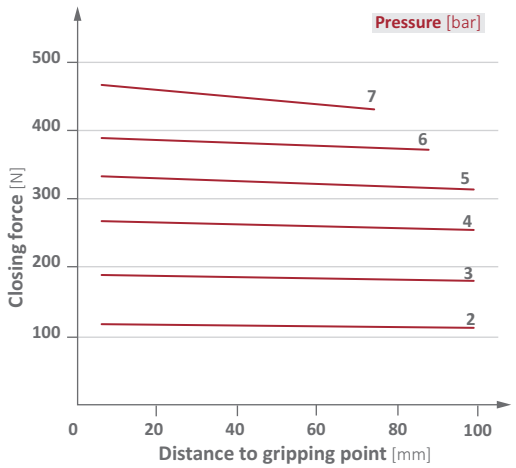

GR04.122-40 | GR04.122-40S

info@hidrafluid.es
976 24 32 10

Base jaws for parallel grippers

Product notes

> Base jaws aluminum (index -1) for customization
> Base jaws steel (index -4) with HNBR pads enable soft gripping
> Base jaws with index -4 come with HNBR pads
> Screws included in scope of delivery

Technical data

Item no.	Suitable for parallel grippers	Weight [g]	Replacement parts
GR04.122-10-1	GR04.122-10, GR04.122-10S	20	--
GR04.122-16-1	GR04.122-16, GR04.122-16S	24	--
GR04.122-20-1	GR04.122-20, GR04.122-20S	37	--
GR04.122-25-1	GR04.122-25, GR04.122-25S	53	--
GR04.122-32-1	GR04.122-32, GR04.122-32S	106	--
GR04.122-40-1	GR04.122-40, GR04.122-40S	156	--
GR04.122-10-4	GR04.122-10, GR04.122-10S	29	GR04.103-4HNBR
GR04.122-16-4	GR04.122-16, GR04.122-16S	49	GR04.103-4HNBR
GR04.122-20-4	GR04.122-20, GR04.122-20S	61	GR04.130C-4HNBR
GR04.122-25-4	GR04.122-25, GR04.122-25S	85	GR04.103-4HNBR
GR04.122-32-4	GR04.122-32, GR04.122-32S	136	GR04.103-4HNBR
GR04.122-40-4	GR04.122-40, GR04.122-40S	230	GR04.130C-4HNBR

Base jaws with HNBR pads

info@hidrafluid.es
976 24 32 10

Dimensions

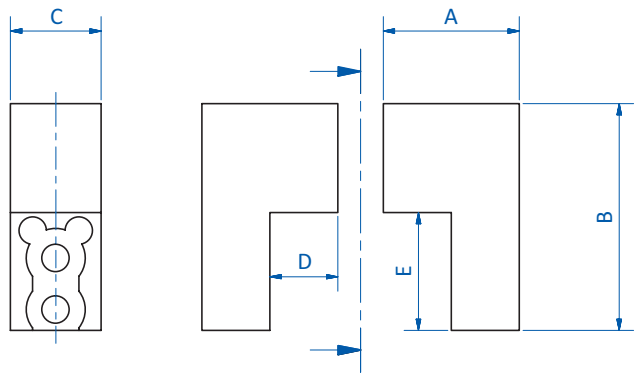

GR04.122-10-1 | GR04.122-16-1 | GR04.122-20-1 | GR04.122-25-1 | GR04.122-32-1 | GR04.122-40-1

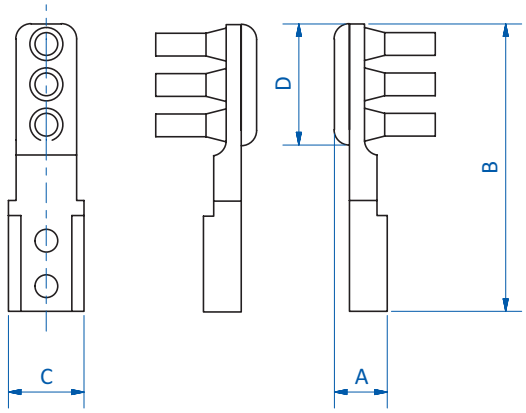

GR04.122-10-4 | GR04.122-16-4 | GR04.122-20-4

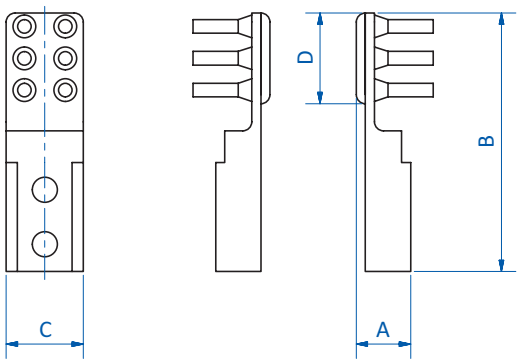

GR04.122-25-4 | GR04.122-32-4 | GR04.122-40-4

Item no.	**A** [mm]	**B** [mm]	**C** [mm]	**D** [mm]	**E** [mm]
GR04.122-10-1	15	25	10	7.5	13
GR04.122-16-1	17.9	28	13	10.4	16
GR04.122-20-1	21.5	33	15	14	21
GR04.122-25-1	25	38	17	17.5	26
GR04.122-32-1	36.4	42	20	22.9	30
GR04.122-40-1	40.4	49	23	26.9	37
GR04.122-10-4	7.5	45.2	10	20	--
GR04.122-16-4	9.5	57	13	20	--
GR04.122-20-4	10.5	57	15	24	--
GR04.122-25-4	12	57	17	20	--
GR04.122-32-4	15.2	57	20	20	--
GR04.122-40-4	17.3	64	24	24	--

info@hidrafluid.es
976 24 32 10

2-finger parallel grippers – high gripping force

Product notes

> Grippers with high gripping force taking high bending moments
> Compact design
> Double-acting for inside/outside gripping and short duty cycles
> Body made of high-strength aluminum alloy
> Sensors for monitoring gripper action via piston position
> Gripping force values are valid for a holding position L = 25 mm measured from top of gripper
> Principle of operation: double-acting
> Medium: filtered and oiled/unoiled air
> PNP and NPN sensors:
- T-slot (straight) for sensors: GR04.203P, GR04.203N

Technical data

Item no.	GR04.600-12	GR04.600-16	GR04.600-20	GR04.600-26	GR04.600-32
Operating pressure [bar (psi)]	3 - 7 (43.5 - 101.5)	3 - 7 (43.5 - 101.5)	3 - 7 (43.5 - 101.5)	3 - 7 (43.5 - 101.5)	3 - 7 (43.5 - 101.5)
Piston diameter [mm]	12	16	20	26	32
Stroke per gripper jaw [mm]	6	8	10	13	16
Closing force at 6 bar (87 psi) [N]	240	320	550	750	1,200
Opening force at 6 bar (87 psi) [N]	280	370	600	830	1,300
Max. operating frequency [1/min]	180	180	180	180	180
Operating temperature [°C (°F)]	-5 - 60 (23 - 140)	-5 - 60 (23 - 140)	-5 - 60 (23 - 140)	-5 - 60 (23 - 140)	-5 - 60 (23 - 140)
Weight [g]	280	450	760	1,400	2,500
Suitable sensors	GR04.203N (p.404) GR04.203P (p.404)	GR04.203N (p.404) GR04.203P (p.404)	GR04.203N (p.404) GR04.203P (p.404)	GR04.203N (p.404) GR04.203P (p.404)	GR04.203N (p.404) GR04.203P (p.404)

FIPA challenge accepted

info@hidrafluid.es
976 24 32 10

Dimensions

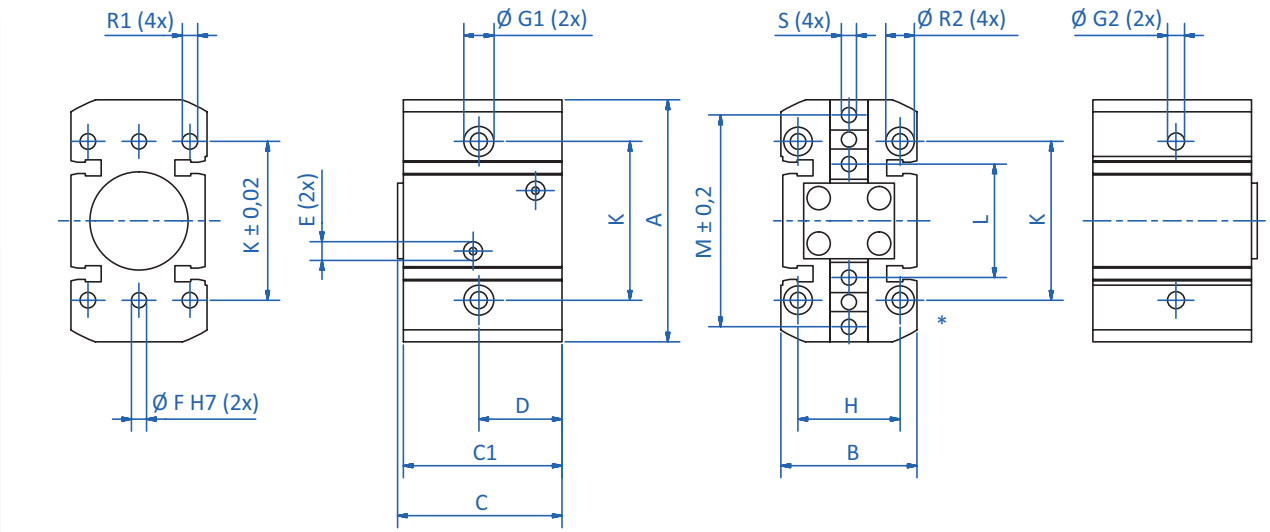

* = Gripper jaw closed

Item no.	GR04.600-12	GR04.600-16	GR04.600-20	GR04.600-26	GR04.600-32
A [mm]	64	80	100	125	160
B [mm]	36	42	50	60	72
C [mm]	43.8	53	61	70	84
C1 [mm]	42	51	59	68	82
D [mm]	22	23	20	36	34
E	M5	M5	Rc1/8	Rc1/8	Rc1/8
Ø F [mm]	4	4	5	6	6
Ø G1	7.5x13	9x16	11x19	15x14	15x15
Ø G2 [mm]	4	5.1	6.6	9	9
H [mm]	27	32	38	45	56
K [mm]	42	52	66	82	100
L	28 (min)	38 (min)	46 (min)	60 (min)	78 (min)
M [mm]	56	70	88	108	142
R1	M5	M5	M6	M8	M8
Ø R2	7.5x26	7.5x33	9.1x45	11x42	11x56
S	M4x8	M5x10	M6x12	M6x13	M8x17

Continued on the next page

info@hidrafluid.es
976 24 32 10

Diagrams

> Gripping force piston diameter 12 mm

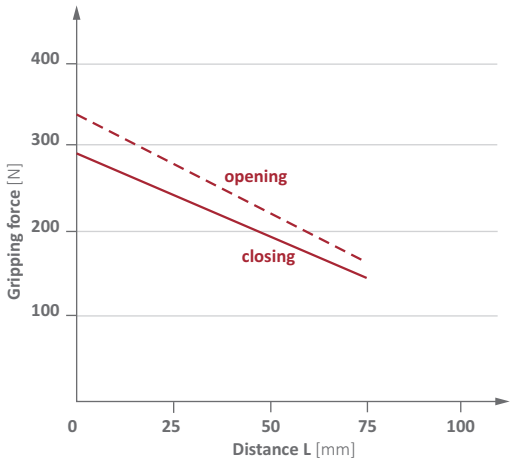

> Gripping force piston diameter 16 mm

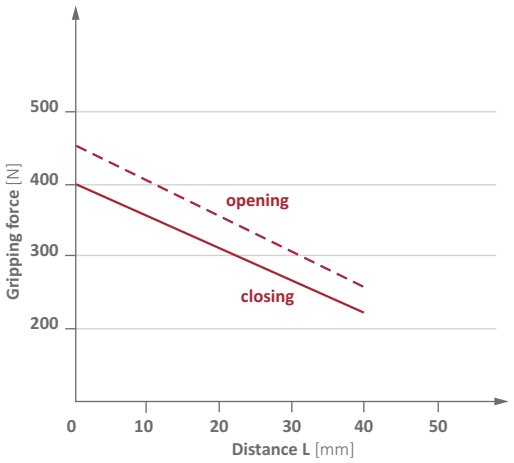

> Gripping force piston diameter 20 mm

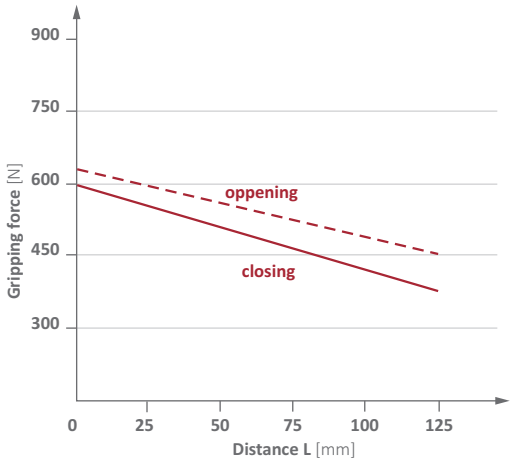

> Gripping force piston diameter 26 mm

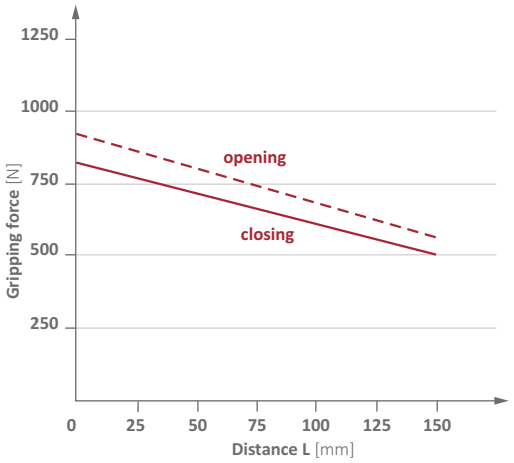

> Gripping force piston diameter 32 mm

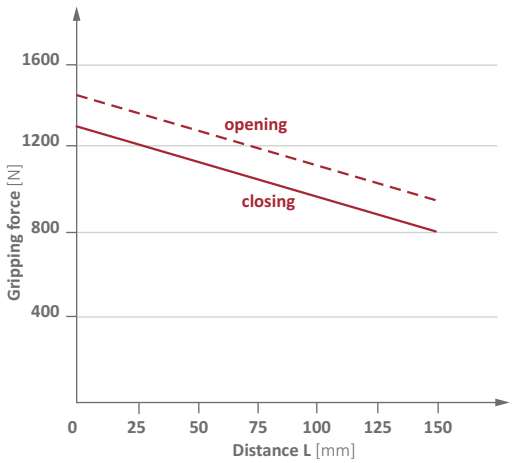

> Description of holding position L

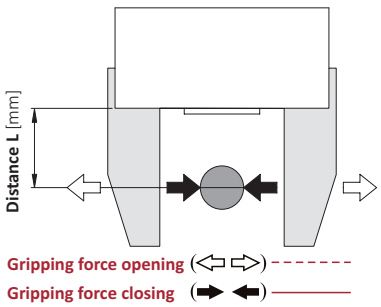

FIPA challenge accepted
info@hidrafluid.es
976 24 32 10

Parallel grippers for large strokes – piston diameter 10 - 20 mm

Product notes

> Gripper for large strokes for handling large parts
> Double-acting for inside/outside gripping and short duty cycles
> Body and jaws made of high-strength aluminum alloy
> Sensors for monitoring gripper action via piston position optionally available
> Principle of operation: double-acting
> Medium: filtered and oiled/unoiled air
> PNP and NPN sensors:
- T-slot (straight) for sensors: GR04.199, GR04.199/NPN

Technical data

Item no.	GR04.510	GR04.510-1	GR04.510-2	GR04.516	GR04.516-1	GR04.516-2	GR04.520	GR04.520-1	GR04.520-2
Operating pressure [bar (psi)]	1.5 - 6 (21.8 - 87)	1.5 - 6 (21.8 - 87)	1.5 - 6 (21.8 - 87)	1 - 6 (14.5 - 87)	1 - 6 (14.5 - 87)	1 - 6 (14.5 - 87)	1 - 6 (14.5 - 87)	1 - 6 (14.5 - 87)	1 - 6 (14.5 - 87)
Piston diameter [mm]	10	10	10	16	16	16	20	20	20
Stroke per gripper jaw [mm]	10	20	30	15	30	40	20	40	50
Closing force at 6 bar (87 psi) [N]	22	22	22	60	60	60	100	100	100
Operating temperature [°C (°F)]	-5 - 70 (23 - 158)	-5 - 70 (23 - 158)	-5 - 70 (23 - 158)	-5 - 70 (23 - 158)	-5 - 70 (23 - 158)	-5 - 70 (23 - 158)	-5 - 70 (23 - 158)	-5 - 70 (23 - 158)	-5 - 70 (23 - 158)
Weight [g]	280	350	430	600	800	950	1,000	1,500	1,700
Suitable sensors	GR04.199 (p.404) GR04.199/ NPN (p.404)	GR04.199 (p.404) GR04.199/ NPN (p.404)	GR04.199 (p.404) GR04.199/ NPN (p.404)	GR04.199 (p.404) GR04.199/ NPN (p.404)	GR04.199 (p.404) GR04.199/ NPN (p.404)	GR04.199 (p.404) GR04.199/ NPN (p.404)	GR04.199 (p.404) GR04.199/ NPN (p.404)	GR04.199 (p.404) GR04.199/ NPN (p.404)	GR04.199 (p.404) GR04.199/ NPN (p.404)

Continued on the next page

info@hidrafluid.es
976 24 32 10

Dimensions

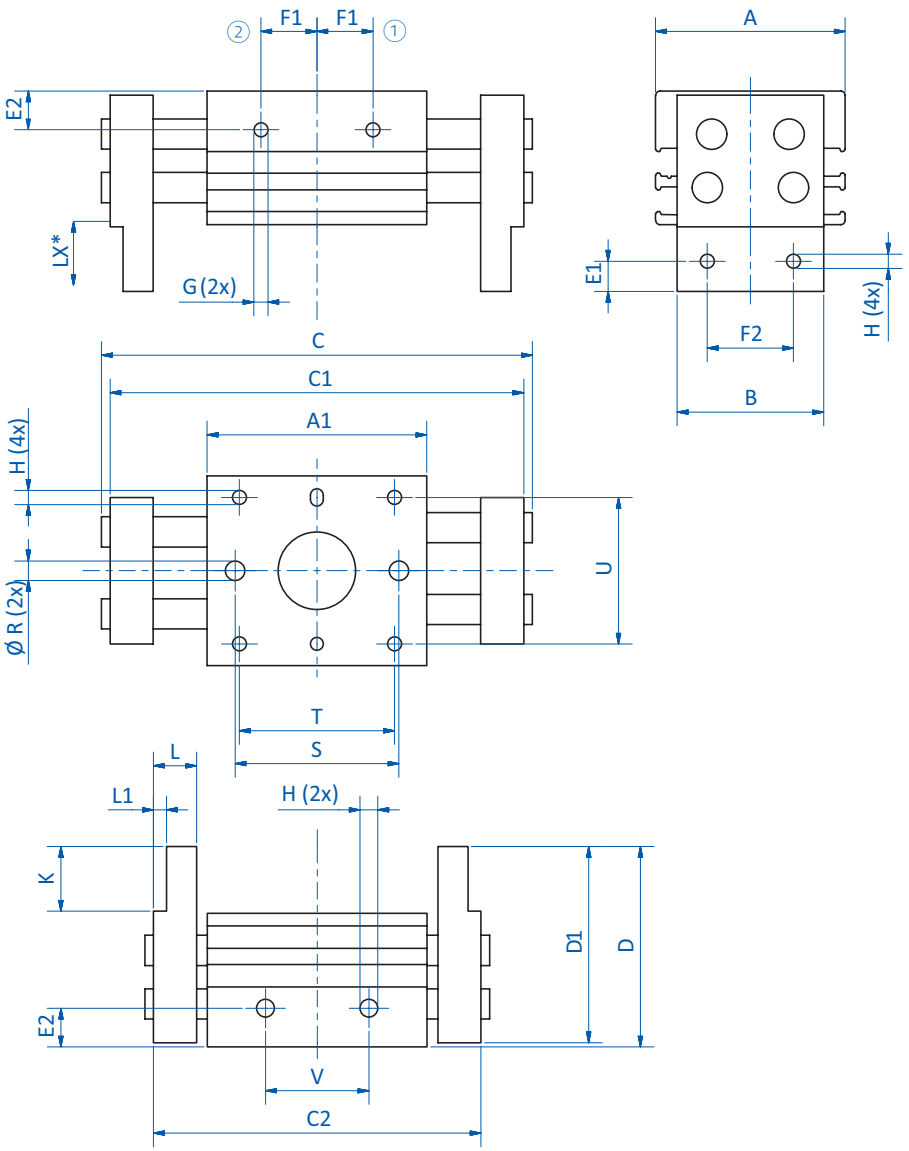

* = LX: Distance gripper jaws – workpiece ① = Compressed air supply (open) ② = Compressed air supply (close)

Item no.	GR04.510	GR04.510-1	GR04.510-2	GR04.516	GR04.516-1	GR04.516-2	GR04.520	GR04.520-1	GR04.520-2
A [mm]	44	44	44	55	55	55	65	65	65
A1 [mm]	51	67	85	60	90	110	71	113	133
B [mm]	35	35	35	44.8	44.8	44.8	54	54	54
C [mm]	101	142	180	130	200	240	159	259	300
C1 [mm]	97	138	176	126	196	236	156	256	297
C2 [mm]	74.5	96.5	114.5	92.5	134.5	154.5	116	176	199.5
D [mm]	46.5	46.5	46.5	59	59	59	70	70	70
D1 [mm]	46	46	46	58	58	58	69	69	69
E1 [mm]	7	7	7	8	8	8	10	10	10
E2 [mm]	9	9	9	10	10	10	11	11	11
F1 [mm]	12	19.5	28.5	14.1	29.4	39.4	16.9	34.4	50
F2 [mm]	20	20	20	25	25	25	30	30	30
G	M5	M5	M5	M5	M5	M5	M5	M5	M5

FIPA challenge accepted
info@hidrafluid.es
976 24 32 10

Item no.	GR04.510	GR04.510-1	GR04.510-2	GR04.516	GR04.516-1	GR04.516-2	GR04.520	GR04.520-1	GR04.520-2
H	M4	M4	M4	M5	M5	M5	M6	M6	M6
K [mm]	15	15	15	19	19	19	24	24	24
L [mm]	10	10	10	12.8	12.8	12.8	17	17	17
L1 [mm]	3	3	3	4	4	4	4.5	4.5	4.5
Ø R [mm]	4.5	4.5	4.5	5.5	5.5	5.5	6.6	6.6	6.6
S [mm]	38	54	72	40	70	90	54	96	116
T [mm]	36	52	70	46	75	95	58	100	120
U [mm]	34	34	34	43	43	43	52	52	52
V [mm]	26	42	60	28	58	78	38	80	100

Diagrams

> Gripping force piston diameter 10 mm – standard version

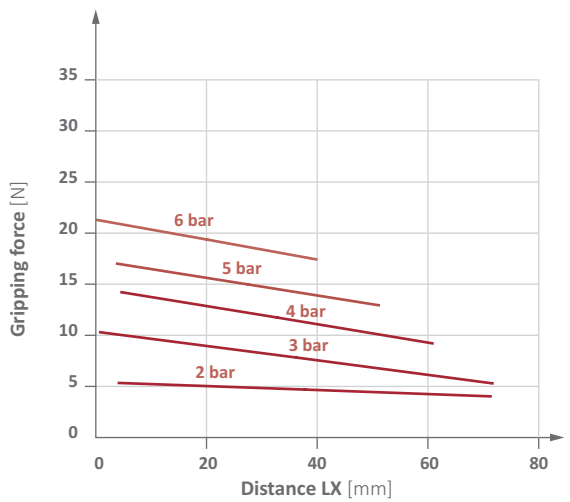

> Gripping force piston diameter 10 mm – versions 1 & 2

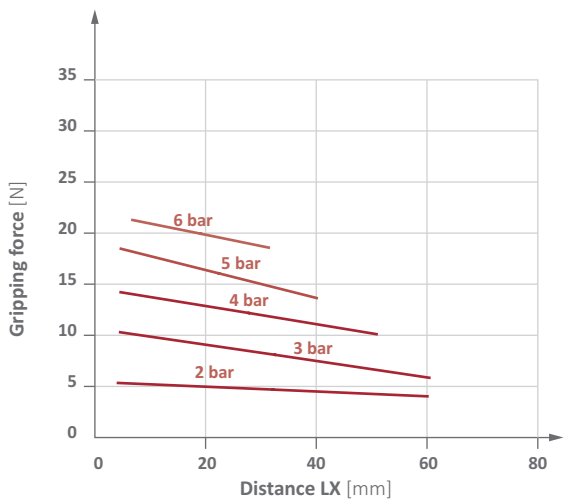

> Gripping force piston diameter 16 mm – standard version

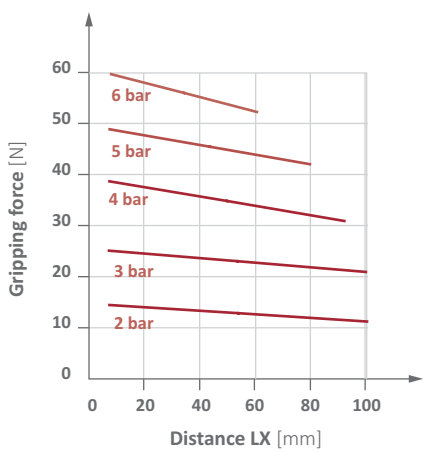

> Gripping force piston diameter 16 mm – versions 1 & 2

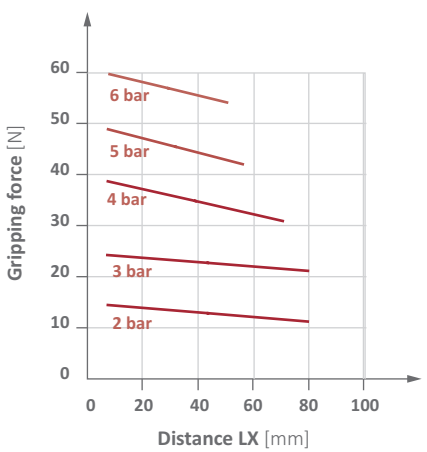

* = LX distance to gripping point

Continued on the next page

info@hidrafluid.es
976 24 32 10

Diagrams

> Gripping force piston diameter 20 mm – standard version

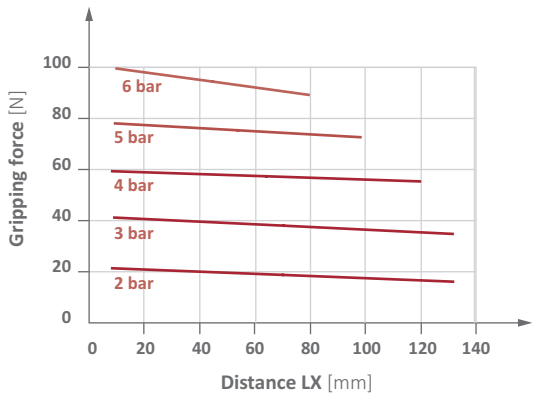

> Gripping force piston diameter 20 mm – versions 1 & 2

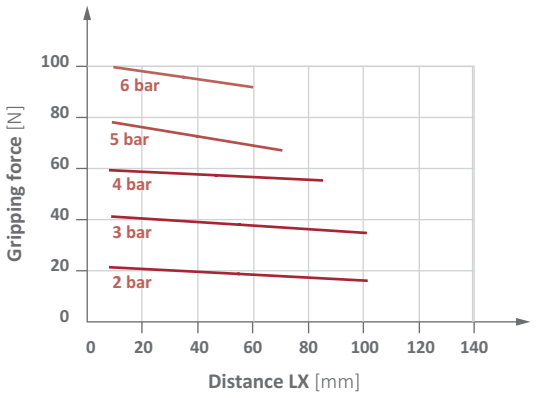

* = LX distance to gripping point

FIPA challenge accepted
info@hidrafluid.es
976 24 32 10

Parallel grippers for large strokes – piston diameter 25 - 32 mm

Product notes

> Grippers for large strokes for handling large parts
> Double-acting for inside/outside gripping and short duty cycles
> Body and jaws made of high-strength aluminum alloy
> Sensors for monitoring gripper action via piston position optionally available
> Principle of operation: double-acting
> Medium: filtered and oiled/unoiled air
> PNP and NPN sensors:
- T-slot (straight) for sensors: GR04.199, GR04.199/NPN

Technical data

Item no.	GR04.525	GR04.525-1	GR04.525-2	GR04.532	GR04.532-1	GR04.532-2
Operating pressure [bar (psi)]	1 - 6 (14.5 - 87)	1 - 6 (14.5 - 87)	1 - 6 (14.5 - 87)	1 - 6 (14.5 - 87)	1 - 6 (14.5 - 87)	1 - 6 (14.5 - 87)
Piston diameter [mm]	25	25	25	32	32	32
Stroke per gripper jaw [mm]	25	50	60	35	60	80
Closing force at 6 bar (87 psi) [N]	160	160	160	300	300	300
Operating temperature [°C (°F)]	-5 - 70 (23 - 158)	-5 - 70 (23 - 158)	-5 - 70 (23 - 158)	-5 - 70 (23 - 158)	-5 - 70 (23 - 158)	-5 - 70 (23 - 158)
Weight [g]	1,700	2,500	2,800	2,900	3,800	4,700
Suitable sensors	GR04.199 (p.404) GR04.199/NPN (p.404)	GR04.199 (p.404) GR04.199/NPN (p.404)	GR04.199 (p.404) GR04.199/NPN (p.404)	GR04.199 (p.404) GR04.199/NPN (p.404)	GR04.199 (p.404) GR04.199/NPN (p.404)	GR04.199 (p.404) GR04.199/NPN (p.404)

Continued on the next page

info@hidrafluid.es
976 24 32 10

Dimensions

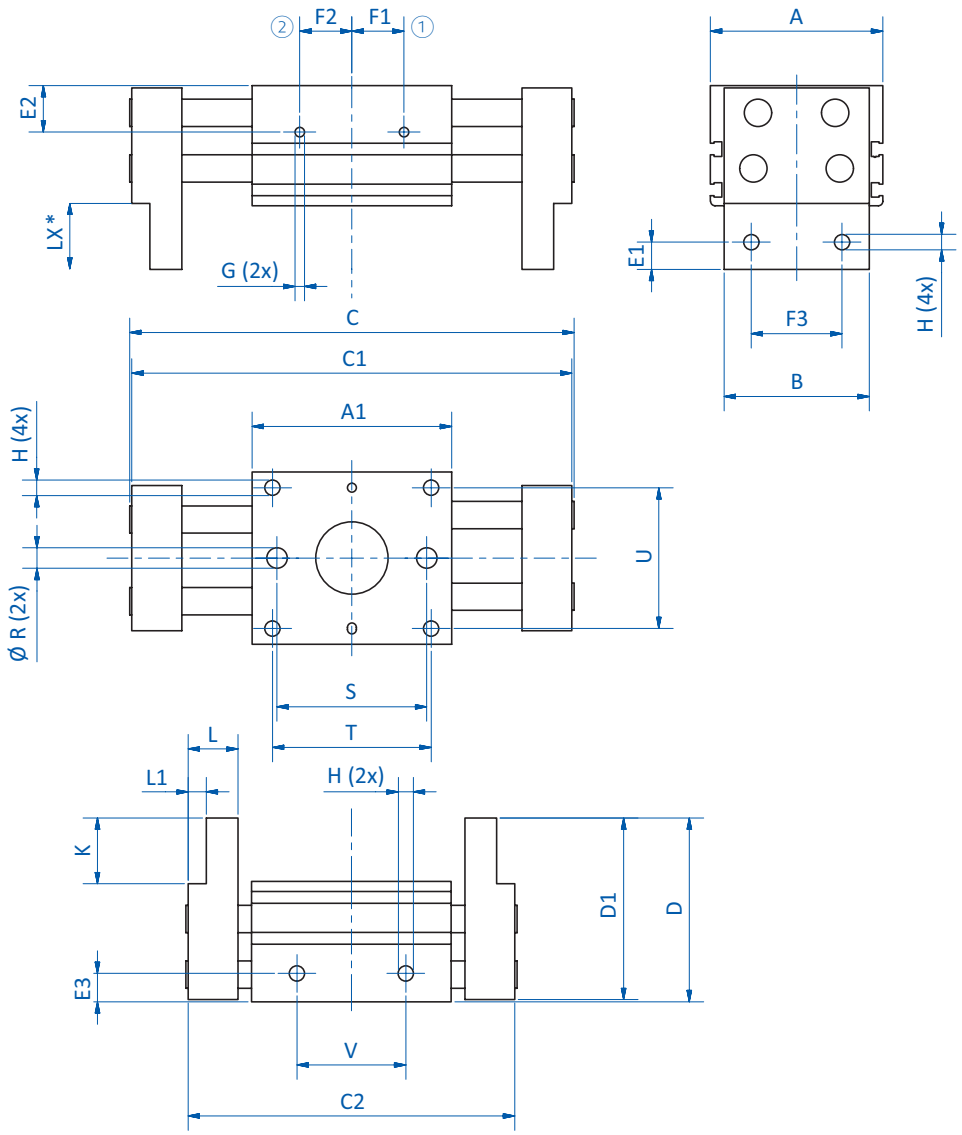

GR04.525 | GR04.525-1 | GR04.525-2

* = LX: Distance gripper jaws – workpiece ① = Compressed air supply (open) ② = Compressed air supply (close)

info@hidrafluid.es
976 24 32 10

Dimensions

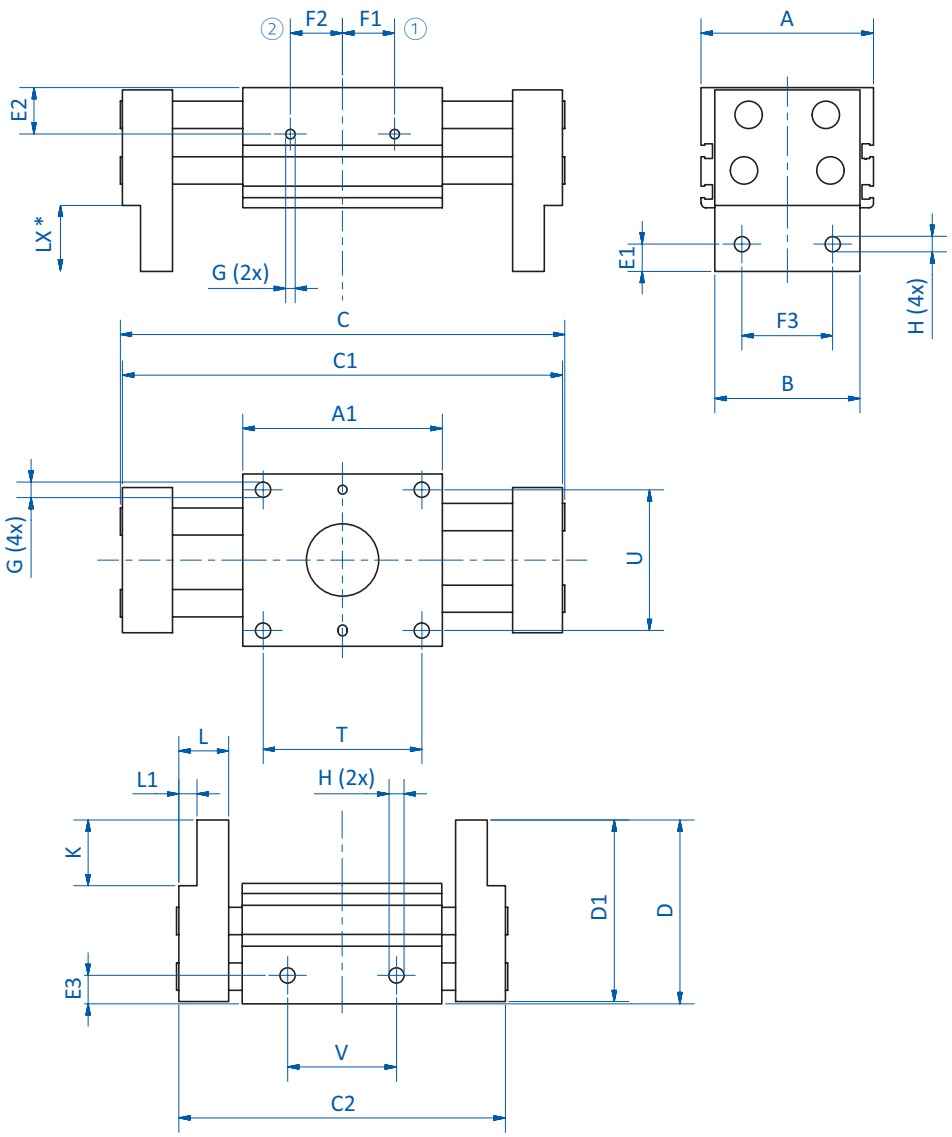

GR04.532 | GR04.532-1 | GR04.532-2

* = LX: Distance gripper jaws – workpiece ① = Compressed air supply (open) ② = Compressed air supply (close)

Item no.	GR04.525	GR04.525-1	GR04.525-2	GR04.532	GR04.532-1	GR04.532-2
A [mm]	76	76	76	82	82	82
A1 [mm]	88	142	160	110	158	202
B [mm]	64	64	64	70	70	70
C [mm]	196.5	328	366	272	370	454
C1 [mm]	195	326	364	268	366	450
C2 [mm]	144	226	244	198	246	290
D [mm]	81	81	81	100	100	100
D1 [mm]	80	80	80	99	99	99
E1 [mm]	12	12	12	15	15	15
E2 [mm]	20.5	20.5	20.5	22	22	22
E3 [mm]	12.5	12.5	12.5	16	16	16

Continued on the next page

info@hidrafluid.es
976 24 32 10

Item no.	GR04.525	GR04.525-1	GR04.525-2	GR04.532	GR04.532-1	GR04.532-2
F1 [mm]	22	50	59	30	54	76
F2 [mm]	22	23	24	30	54	76
F3 [mm]	40	40	40	50	50	50
G	M5	M5	M5	M8	M8	M8
H	M8	M8	M8	M10	M10	M10
K [mm]	29	29	29	32	32	32
L [mm]	22	22	22	24	24	24
L1 [mm]	8	8	8	9	9	9
Ø R [mm]	9	9	9	--	--	--
S [mm]	66	120	138	--	--	--
T [mm]	70	124	142	86	134	178
U [mm]	62	62	62	64	64	64
V [mm]	48	102	120	54	102	146

Diagrams

> Gripping force piston diameter 25 mm – standard version

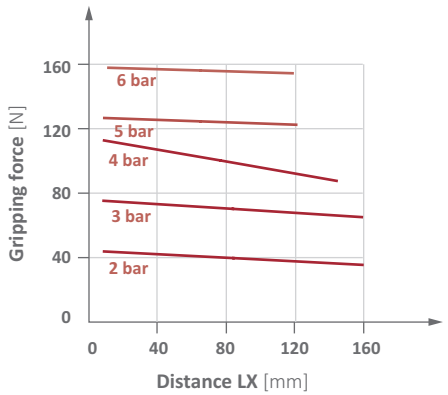

> Gripping force piston diameter 25 mm – versions 1 & 2

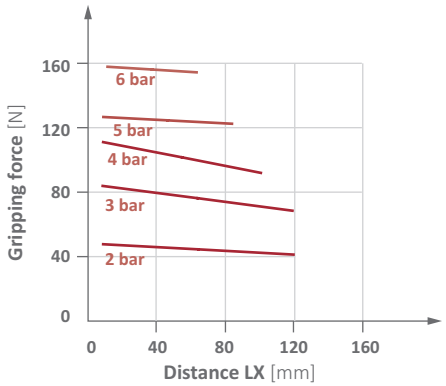

> Gripping force piston diameter 32 mm – standard version

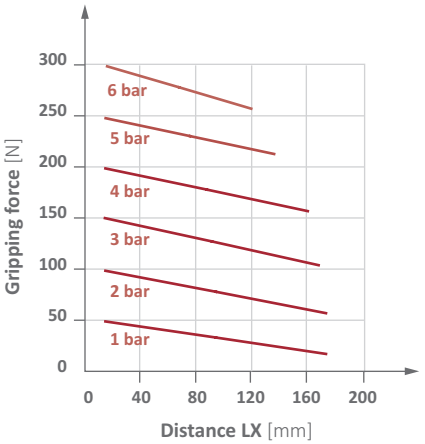

> Gripping force piston diameter 32 mm – versions 1 & 2

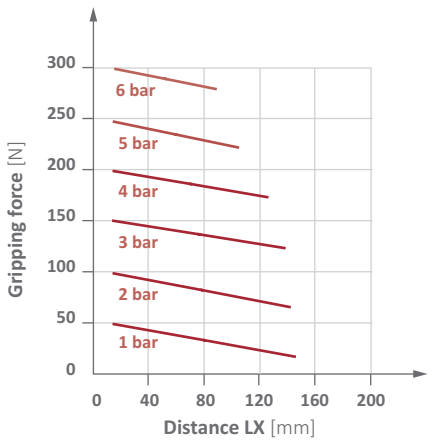

* = LX distance to gripping point

FIPA challenge accepted
info@hidrafluid.es
976 24 32 10

3-finger grippers

Product notes

> Grippers with high gripping force
> Compact design
> Double-acting for inside/outside gripping and short duty cycles
> Body and jaws made of high-strength aluminum alloy
> Sensors for monitoring gripper action via piston position optionally available
> Principle of operation: double-acting
> Medium: filtered and oiled/unoiled air
> PNP and NPN sensors:
- T-slot (straight) for sensors: GR04.199, GR04.199/NPN

Calculation of the inner gripping diameter:
> Min.: dimensions W closed x 2
> Max.: dimensions W opened x 2

Technical data

Item no.	GR04.125-16	GR04.125-25	GR04.125-32	GR04.125-40	GR04.125-50	GR04.125-60	GR04.125-80
Operating pressure [bar (psi)]	2 - 6 (29 - 87)	2 - 6 (29 - 87)	1 - 6 (14.5 - 87)	1 - 6 (14.5 - 87)	1 - 6 (14.5 - 87)	1 - 6 (14.5 - 87)	1 - 6 (14.5 - 87)
Piston diameter [mm]	16	25	32	40	50	63	80
Stroke per gripper jaw [mm]	2	3	4	5	6	8	10
Closing force at 5 bar (72,5 psi) [N]	14	42	74	118	187	335	500
Opening force at 5 bar (72,5 psi) [N]	16	47	82	130	204	359	525
Operating frequency [Hz]	120	120	60	60	60	60	30
Operating temperature [°C (°F)]	-5 - 70 (23 - 158)	-5 - 70 (23 - 158)	-5 - 70 (23 - 158)	-5 - 70 (23 - 158)	-5 - 70 (23 - 158)	-5 - 70 (23 - 158)	-5 - 70 (23 - 158)
Weight [g]	62	139	240	354	542	1,000	1,850
Accessories	Sensor: GR04.280N (p.404) Sensor: GR04.280P (p.404) Mounting bracket: GR06.125-16 (p.241)	Sensor: GR04.280N (p.404) Sensor: GR04.280P (p.404) Mounting bracket: GR06.125-25 (p.241)	Sensor: GR04.199 (p.404) Sensor: GR04.199/NPN (p.404) Mounting bracket: GR06.125-32 (p.241)	Sensor: GR04.199 (p.404) Sensor: GR04.199/NPN (p.404) Mounting bracket: GR06.125-40 (p.241)	Sensor: GR04.199 (p.404) Sensor: GR04.199/NPN (p.404) Mounting bracket: GR06.125-50 (p.241)	Sensor: GR04.199 (p.404) Sensor: GR04.199/NPN (p.404) Mounting bracket: GR06.125-60 (p.241)	Sensor: GR04.199 (p.404) Sensor: GR04.199/NPN (p.404) Mounting bracket: GR06.125-80 (p.241)

Continued on the next page

info@hidrafluid.es
976 24 32 10

Dimensions

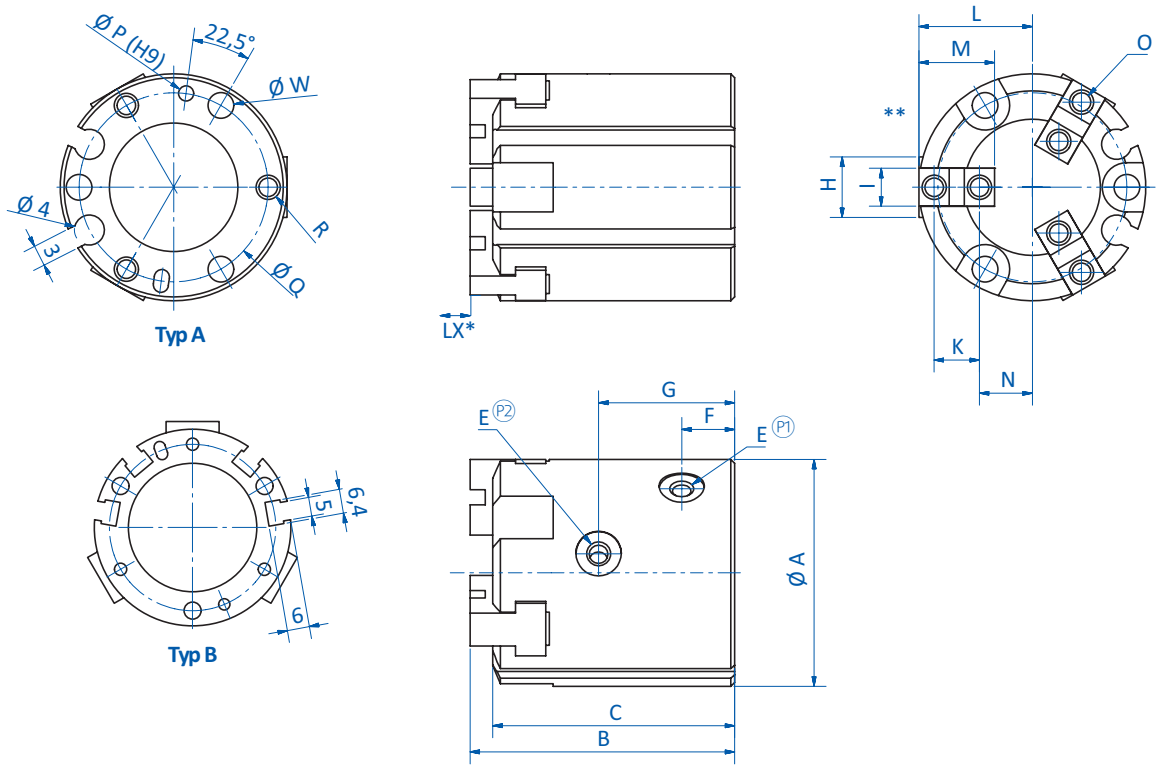

* = LX: Distance between the gripper jaw and the gripper (see gripper force diagrams) P1 = Compressed air supply (open) P2 = Compressed air supply (close) ** = Gripper jaw closed

Item no.	GR04.125-16	GR04.125-25	GR04.125-32	GR04.125-40	GR04.125-50	GR04.125-60	GR04.125-80
Ø A [mm]	30	42	52	62	70	86	106
B [mm]	35	40	44	47	55	66	82
C [mm]	32	37	41	44	52	62	77
E	M3x0.5x11	M5x0.8x15	M5x0,8	M5x0,8	M5x0,8	M5x0,8	G1/8
F [mm]	7	7	8	8	9	12	13.5
G [mm]	18	22	24	26	29	34	40.5
H [mm]	8	12	14	16	18	24	28
I [mm]	5	6	8	8	10	12	14
K [mm]	6	8	11	12	14	17	20
L open [mm]	17	24	32	35	41	51	63.3
L closed [mm]	15	21	28	31	35	43	53.3
M [mm]	10	14	20	21	24	28	32
N open [mm]	9	13	16.5	19	21	28.5	37.3
N closed [mm]	7	9	12.5	14	15	20.5	27.3
O	M3x0.5x5	M3x0.5x5	M4x0.7x8	M4x0.7x8	M5x0.8x10	M5x0.8x10	M6x1x12
Ø P	2x2	3x3	3x3	4x4	4x4	5x5	5x5
Ø Q [mm]	25	34	44	53	62	76	95
R	M3x0.5x4	M4x0.5x7	M4x0.7x6	M5x0.8x0.7	M5x0.8x10	M6x1x9	M6x1x12
Ø W [mm]	3.4	4.5	4.5	5.5	5.5	6.5	6.5
Model	A	A	B	B	B	B	B

FIPA challenge accepted
info@hidrafluid.es
976 24 32 10

Diagrams

> Gripping force piston diameter 16 mm

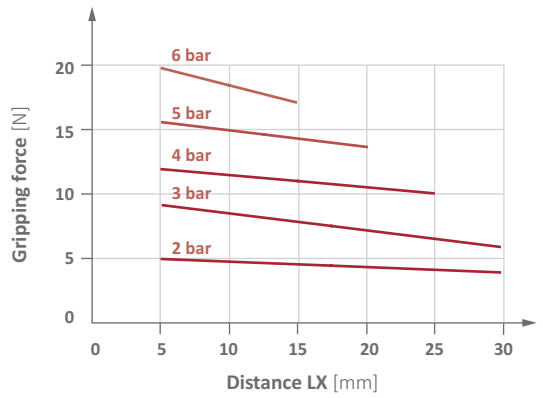

> Gripping force piston diameter 20 mm

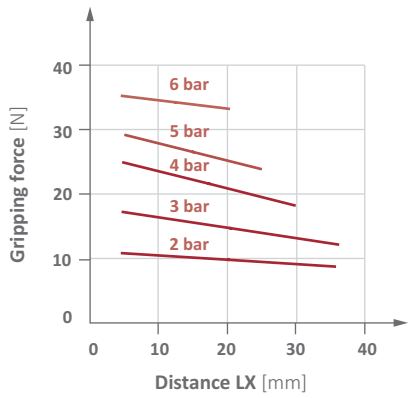

> Gripping force piston diameter 25 mm

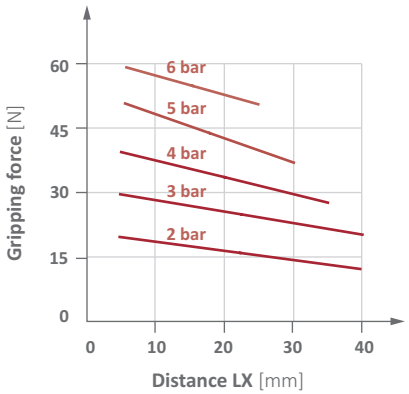

> Gripping force piston diameter 32 mm

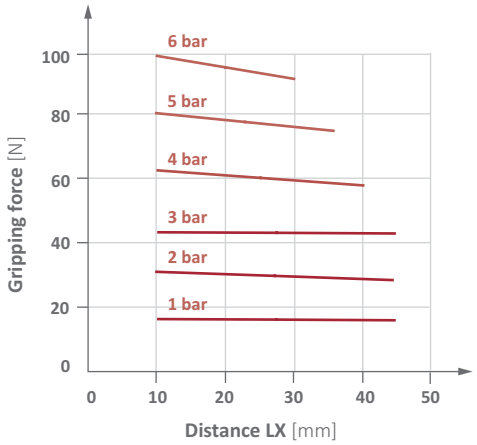

> Gripping force piston diameter 40 mm

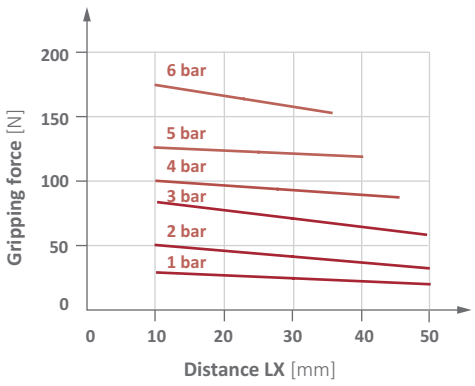

> Gripping force piston diameter 50 mm

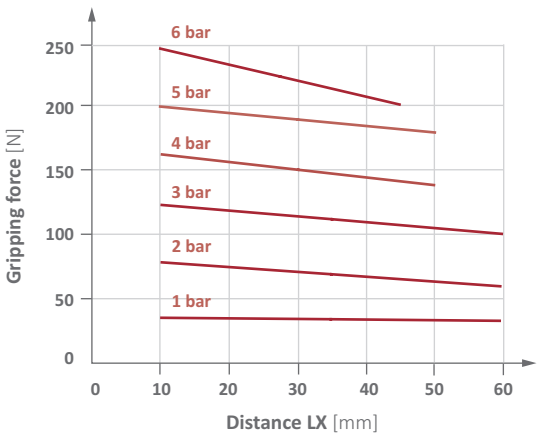

* = LX distance to gripping point

info@hidrafluid.es
976 24 32 10

3-finger grippers for large strokes

Product notes

> Grippers with stroke more than double of GR04.125 at same gripping force
> Compact and flat design
> Double-acting for inside/outside gripping and short duty cycles
> Body and jaws made of high-strength aluminum alloy
> Sensors for monitoring gripper action via piston position optionally available
> Principle of operation: double-acting
> Medium: filtered and oiled/unoiled air
> PNP and NPN sensors:
  - C-slot (90° angle): GR04.202P, GR04.202N
  - C-slot (straight, short design): GR04.280P, GR04.280N

Calculation of the inner gripping diameter:
> Min.: dimensions W closed x 2
> Max.: dimensions W opened x 2

Technical data

Item no.	GR04.125-16L	GR04.125-25L	GR04.125-32L	GR04.125-40L	GR04.125-50L
Operating pressure [bar (psi)]	2 - 6 (29 - 87)	2 - 6 (29 - 87)	1 - 6 (14.5 - 87)	1 - 6 (14.5 - 87)	1 - 6 (14.5 - 87)
Piston diameter [mm]	16	25	32	40	50
Stroke per gripper jaw [mm]	5	6	8	10	14
Closing force at 5 bar (72,5 psi) [N]	14	42	74	118	187
Opening force at 5 bar (72,5 psi) [N]	16	47	82	130	204
Operating frequency [Hz]	120	120	60	60	60
Operating temperature [°C (°F)]	-10 - 60 (14 - 140)	-10 - 60 (14 - 140)	-10 - 60 (14 - 140)	-10 - 60 (14 - 140)	-10 - 60 (14 - 140)
Weight [g]	100	190	373	600	930
Accessories	Sensor: GR04.202N (p.404) Sensor: GR04.202P (p.404) Sensor: GR04.280N (p.404) Sensor: GR04.280P (p.404) Mounting bracket: GR06.125-16 (p.241)	Sensor: GR04.202N (p.404) Sensor: GR04.202P (p.404) Sensor: GR04.280N (p.404) Sensor: GR04.280P (p.404) Mounting bracket: GR06.125-25 (p.241)	Sensor: GR04.202N (p.404) Sensor: GR04.202P (p.404) Sensor: GR04.280N (p.404) Sensor: GR04.280P (p.404) Mounting bracket: GR06.125-32 (p.241)	Sensor: GR04.199 (p.404) Sensor: GR04.199/NPN (p.404) Mounting bracket: GR06.125-40 (p.241)	Sensor: GR04.199 (p.404) Sensor: GR04.199/NPN (p.404) Mounting bracket: GR06.125-50 (p.241)

info@hidrafluid.es
976 24 32 10

Dimensions

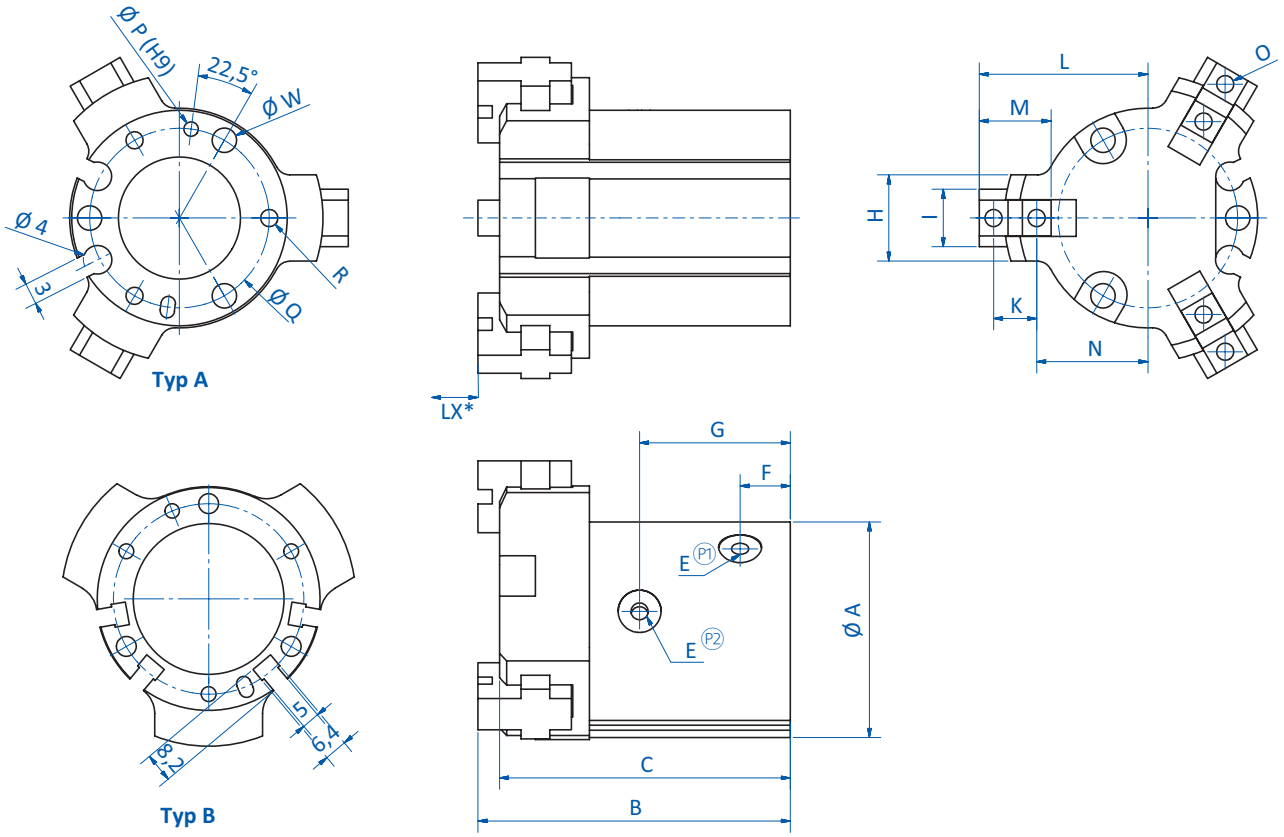

* = LX: Distance between the gripper jaw and the gripper (see gripper force diagrams) (P1) = Compressed air supply (open) (P2) = Compressed air supply (close)

Item no.	GR04.125-16L	GR04.125-25L	GR04.125-32L	GR04.125-40L	GR04.125-50L
Ø A [mm]	30	42	52	62	70
B [mm]	43.5	49	58	64	77.5
C [mm]	40.5	46	55	61	74.5
E	M3	M5	M5	M5	M5
F [mm]	7	7	8	9	9
G [mm]	21	23.5	28	31	38
H [mm]	12	19	24	30	32
I [mm]	8	13	16	18	20
K [mm]	6	8	11	12	14
L open [mm]	23.5	30	42	47.5	60
L closed [mm]	18.5	24	34	37.5	46
M [mm]	10	14	20	21	24
N open [mm]	15.5	19	26.5	31	41
N closed [mm]	10.5	13	18.5	21	27
O	M3/5deep	M3/6deep	M4/8deep	M4/8deep	M5/10deep
Ø P	2x2	3x3	3x3	4x4	4x4
Ø Q [mm]	25	34	44	53	62
R	M3x0.5x1.5	M4x0.7x1.5	M4x0.7x6	M5x0.8x10	M5x0.8x10
Ø W [mm]	3.4	4.5	4.5	5.5	5.5
Model	A	A	B	B	B

Continued on the next page

info@hidrafluid.es
976 24 32 10

Diagrams

> Gripping force piston diameter 16 mm

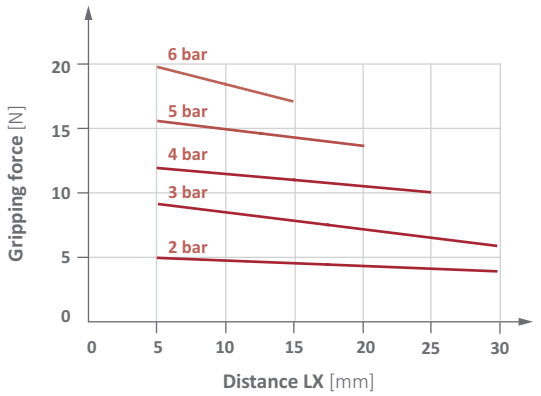

> Gripping force piston diameter 25 mm

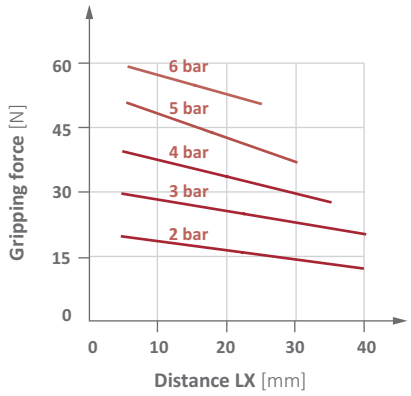

> Gripping force piston diameter 32 mm

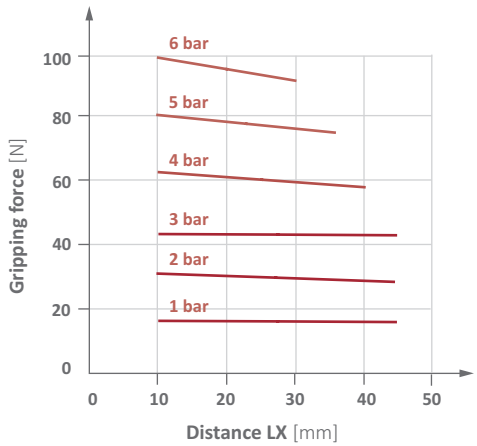

> Gripping force piston diameter 40 mm

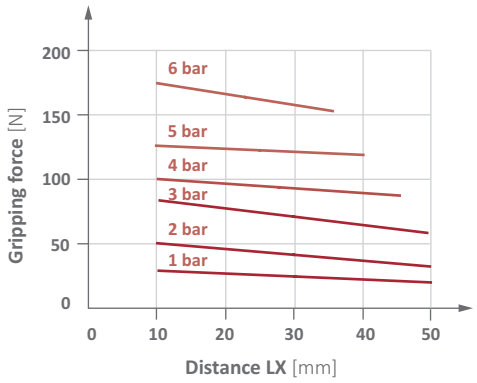

> Gripping force piston diameter 50 mm

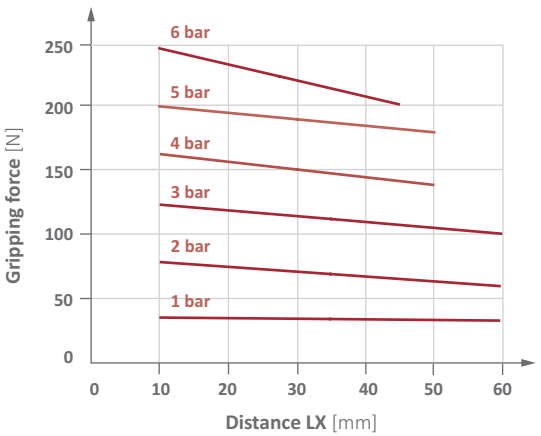

* = LX distance to gripping point

FIPA challenge accepted
info@hidrafluid.es
976 24 32 10

2-finger angular grippers 40°

Product notes

> Grippers for undercuts, clamping, mounting and pick & place applications
> Double-acting: Inside/outside gripping and short duty cycles
> Body and jaws made of high-strength aluminum alloy
> Sensors for monitoring gripper action via piston position optionally available
> Principle of operation: double-acting
> Medium: filtered and oiled/unoiled air
> PNP and NPN sensors:
- T-slot (straight) for sensors: GR04.203P, GR04.203N

Technical data

Item no.	GR04.123-10	GR04.123-16	GR04.123-20	GR04.123-25	GR04.123-32
Pressure range [bar (psi)]	1.5 - 7 (21.8 - 101.5)	1.5 - 7 (21.8 - 101.5)	1.5 - 7 (21.8 - 101.5)	1.5 - 7 (21.8 - 101.5)	1.5 - 7 (21.8 - 101.5)
Piston diameter [mm]	10	16	20	25	32
Angle stroke open [°]	-10	-10	-10	-10	-10
Angle stroke closed [°]	30	30	30	30	30
Max. closing torque at 6 bar [Ncm]	11	47	100	199	358
Max. opening torque at 6 bar [Ncm]	15	65	135	252	476
Max. operating frequency [1/min]	80	80	80	80	80
Operating temperature [°C (°F)]	0 - 60 (32 - 140)	0 - 60 (32 - 140)	0 - 60 (32 - 140)	0 - 60 (32 - 140)	0 - 60 (32 - 140)
Weight [g]	100	120	200	330	560
Accessories	Sensor: GR04.203N (p.404) Sensor: GR04.203P (p.404) Connector cable: 20.503 (p.410) Mounting bracket: GR06.050 (p.240) Base jaw: GR04.123-10-1 (p.236)	Sensor: GR04.203N (p.404) Sensor: GR04.203P (p.404) Connector cable: 20.503 (p.410) Mounting bracket: GR06.051 (p.240) Base jaw: GR04.123-16-1 (p.236)	Sensor: GR04.203N (p.404) Sensor: GR04.203P (p.404) Connector cable: 20.503 (p.410) Mounting bracket: GR06.052 (p.240) Base jaw: GR04.123-20-1 (p.236)	Sensor: GR04.203N (p.404) Sensor: GR04.203P (p.404) Connector cable: 20.503 (p.410) Mounting bracket: GR06.053 (p.240) Base jaw: GR04.123-25-1 (p.236)	Sensor: GR04.203N (p.404) Sensor: GR04.203P (p.404) Connector cable: 20.503 (p.410) Mounting bracket: GR06.054 (p.240) Base jaw: GR04.123-32-1 (p.236)

Continued on the next page

info@hidrafluid.es
976 24 32 10

Dimensions

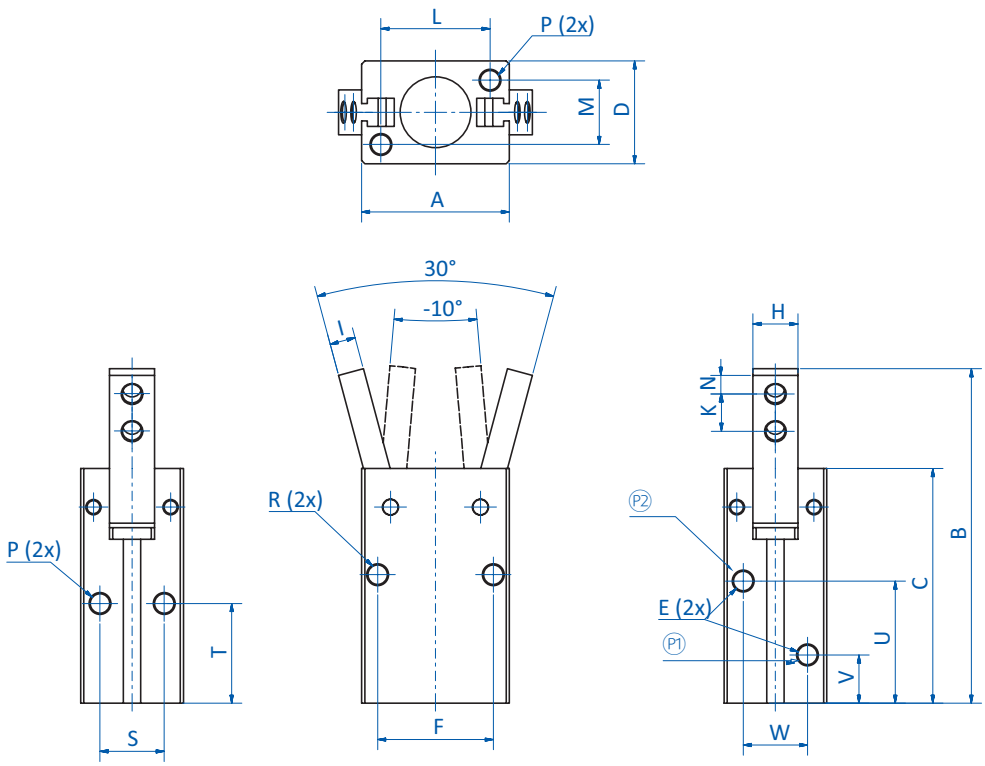

S1 = Sensor slot for GR04.203 P1 = Compressed air supply (open) P2 = Compressed air supply (close)

Item no.	GR04.123-10	GR04.123-16	GR04.123-20	GR04.123-25	GR04.123-32
A [mm]	23	34	45	52	60
B [mm]	52	64	75	89	100
C [mm]	36.5	45.5	53	61	68
D [mm]	16	22	26	32	40
E	M3	M5	M5	M5	M5
F [mm]	18	24	30	36	44
H [mm]	7	9	12	14	18
I [mm]	4	6	7	9	10
K [mm]	6	8	10	12	14
L [mm]	17	26	35	40	46
M [mm]	10	14	16	20	26
N [mm]	3	3	4	5	6
P	M3	M4	M5	M6	M6
R	M3	M4	M5	M6	M6
S [mm]	10	14	16	20	26
T [mm]	15.5	21	22	24.5	30
U [mm]	19	25.5	28	31	33.5
V [mm]	7.5	7.5	8	9	10
W [mm]	10	12	13	18	24

FIPA challenge accepted
info@hidrafluid.es
976 24 32 10

Diagrams

> Length of gripping point (* see diagrams)

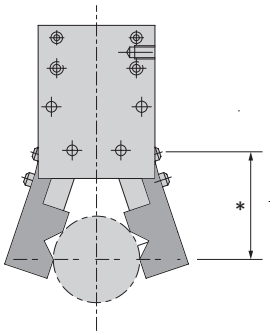

GR04.123-10 | GR04.123-16 | GR04.123-20 | GR04.123-25 | GR04.123-32

> Gripping force as a function of length of gripping point and feed pressure

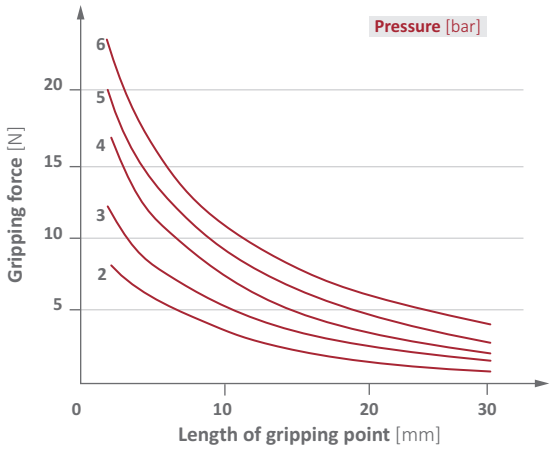

GR04.123-10

> Gripping force as a function of length of gripping point and feed pressure

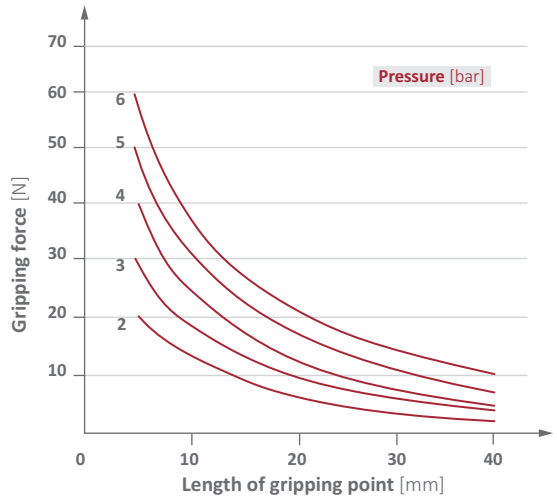

GR04.123-16

> Gripping force as a function of length of gripping point and feed pressure

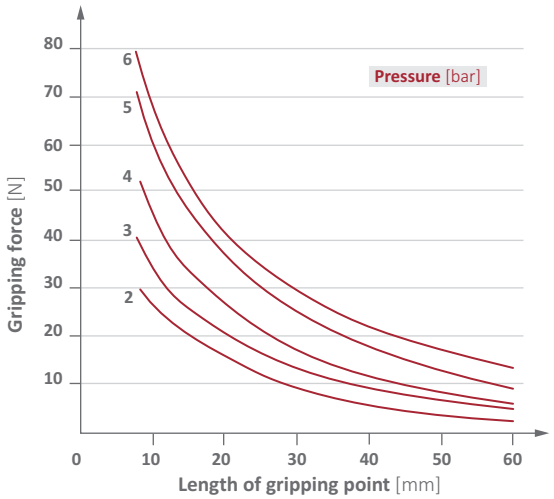

GR04.123-20

> Gripping force as a function of length of gripping point and feed pressure

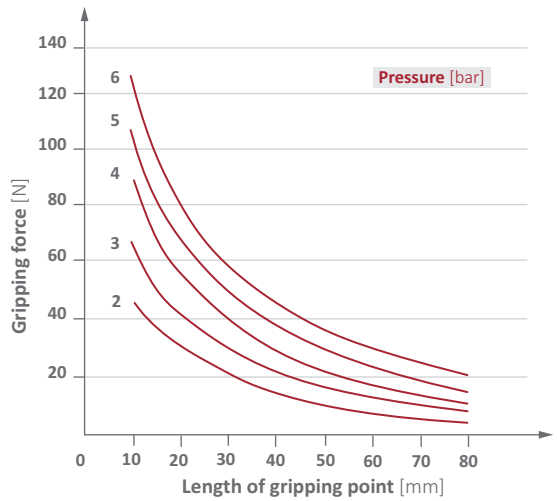

GR04.123-25

> Gripping force as a function of length of gripping point and feed pressure

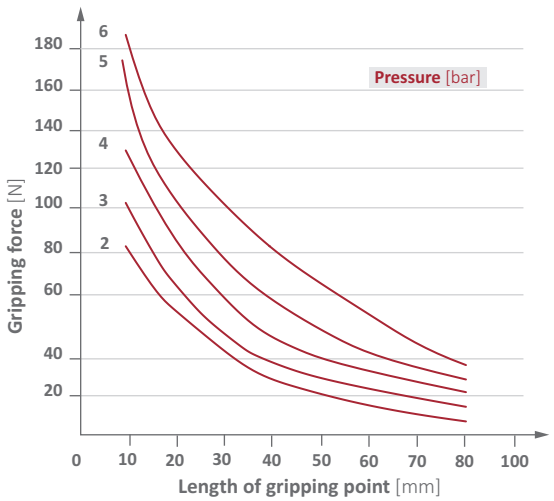

GR04.123-32

info@hidrafluid.es
976 24 32 10

Base jaws for angular grippers

Product notes

> Aluminum blanks for customized jaws
> Screws included in scope of delivery

Technical data

Item no.	Suitable for angular grippers	Weight [g]
GR04.123-10-1	GR04.123-10	18
GR04.123-16-1	GR04.123-16	30
GR04.123-20-1	GR04.123-20	38
GR04.123-25-1	GR04.123-25	56
GR04.123-32-1	GR04.123-32	150

Dimensions

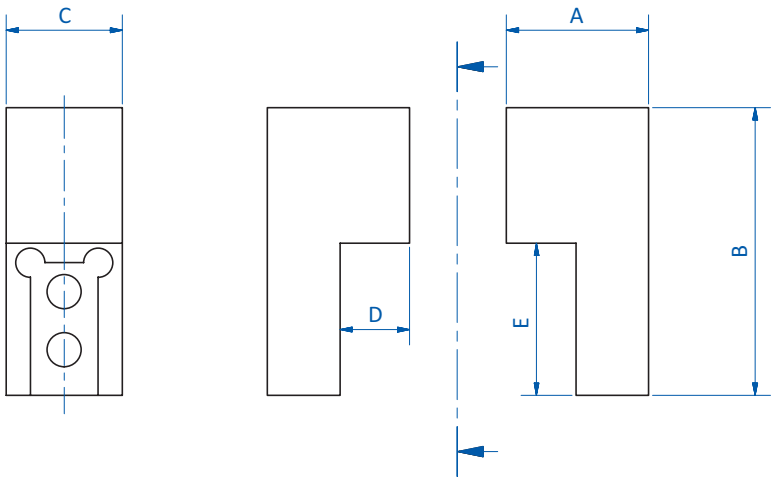

Item no.	A [mm]	B [mm]	C [mm]	D [mm]	E [mm]
GR04.123-10-1	14.7	29.7	12	7.2	15.7
GR04.123-16-1	20.5	31.5	14	13	17.5
GR04.123-20-1	24	36	17	16.5	21
GR04.123-25-1	29.8	40	19	20.8	26
GR04.123-32-1	33	44	23	24	29

info@hidrafluid.es
976 24 32 10

2-finger angular gripper 180° – self-centering

Product notes

> High gripping force with high gripping precision
> Gripping of objects located behind large undercuts; clamping and assembly of parts
> Suitable for dusty environments due to dust protection seals
> Double-acting, short duty cycles
> Body and jaws made of high-strength aluminum alloy
> Versatile use with customized gripper jaws
> Optional parts monitoring by detection of piston position
> Principle of operation: double-acting
> Medium: filtered and oiled/unoiled air

> PNP and NPN sensors:
  - C-slot (90° angle): GR04.202P, GR04.202N
  - C-slot (straight, short design): GR04.280P, GR04.280N
> Extension cable for sensors:
  - 20.503: 3-pole M8, length 2,500 mm, open wire
  - 20.570: 3-pole M8, length 1,500 mm, end with plug 3-pole M8

Technical data

Item no.	GR04.121-10	GR04.121-16	GR04.121-20	GR04.121-25
Pressure range [bar (psi)]	1 - 6 (14.5 - 87)	1 - 6 (14.5 - 87)	1 - 6 (14.5 - 87)	1 - 6 (14.5 - 87)
Effective gripping torque [Nm]	0.16	0.54	1.1	2.28
Piston diameter [mm]	10	16	20	25
Angle stroke open [°]	180 - 182	180 - 182	180 - 182	180 - 182
Angle stroke closed [°]	-3	-3	-3	-3
Repeat accuracy [mm]	+/- 0.2	+/- 0.2	+/- 0.2	+/- 0.2
Max. operating frequency [1/min]	60	60	60	60
Operating temperature [°C (°F)]	-10 - 60 (14 - 140)	-10 - 60 (14 - 140)	-10 - 60 (14 - 140)	-10 - 60 (14 - 140)
Weight [g]	80	150	320	600
Accessories	Sensor: GR04.202N (p.404) Sensor: GR04.202P (p.404) Sensor: GR04.280N (p.404) Sensor: GR04.280P (p.404) Connector cable: 20.503 (p.410) Connector cable: 20.570 (p.410)	Sensor: GR04.202N (p.404) Sensor: GR04.202P (p.404) Sensor: GR04.280N (p.404) Sensor: GR04.280P (p.404) Connector cable: 20.503 (p.410) Connector cable: 20.570 (p.410)	Sensor: GR04.202N (p.404) Sensor: GR04.202P (p.404) Sensor: GR04.280N (p.404) Sensor: GR04.280P (p.404) Connector cable: 20.503 (p.410) Connector cable: 20.570 (p.410)	Sensor: GR04.202N (p.404) Sensor: GR04.202P (p.404) Sensor: GR04.280N (p.404) Sensor: GR04.280P (p.404) Connector cable: 20.503 (p.410) Connector cable: 20.570 (p.410)

Continued on the next page

info@hidrafluid.es
976 24 32 10

Dimensions

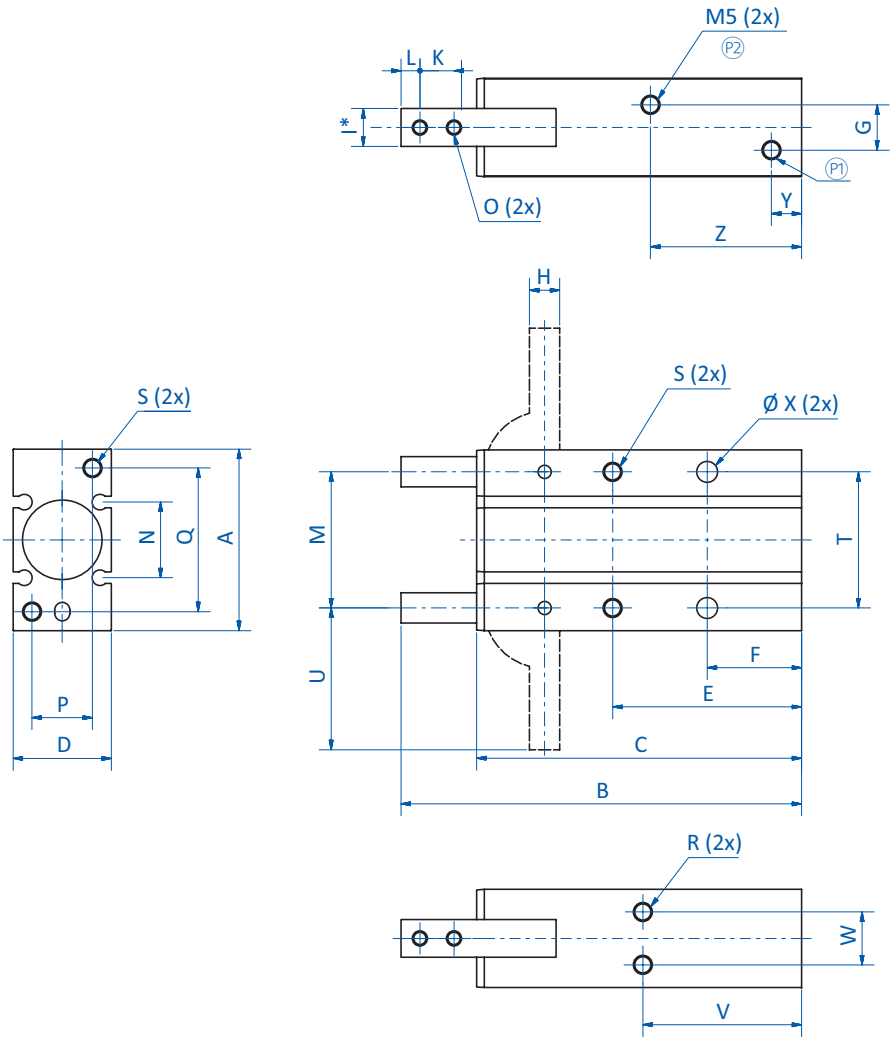

* = Tolerance: -0.005 mm to -0.025 mm P1 = Compressed air supply (open) P2 = Compressed air supply (close)

Item no.	GR04.121-10	GR04.121-16	GR04.121-20	GR04.121-25
A [mm]	30	38	48	58
B [mm]	71	84	106	131
C [mm]	58	69	86	107
D [mm]	15	20	26	30
E [mm]	35	41	50	60
F [mm]	18	20	25	30
G [mm]	3	8	12	14
H [mm]	4	5	8	10
I [mm]	6	8	10	12
K [mm]	6	7	9	12
L [mm]	3	4	5	6
M [mm]	22	28	36	45
N [mm]	13	18	20	24
O	M3	M3	M4	M5
P [mm]	9	12	16	18
Q [mm]	24	30	38	46

FIPA challenge accepted
info@hidrafluid.es
976 24 32 10

Item no.	GR04.121-10	GR04.121-16	GR04.121-20	GR04.121-25
R	M3x4	M4x5	M5x8	M6x10
S	M3x6	M4x8	M5x10	M6x12
T [mm]	24	30	36	42
U [mm]	23.5	28.5	37	45
V [mm]	30	33	42	50
W [mm]	9	12	14	16
Ø X [mm]	3.4	4.5	5.5	6.6
Y [mm]	7	7	8	8
Z [mm]	30	32	40	50

Application examples

> Clamping

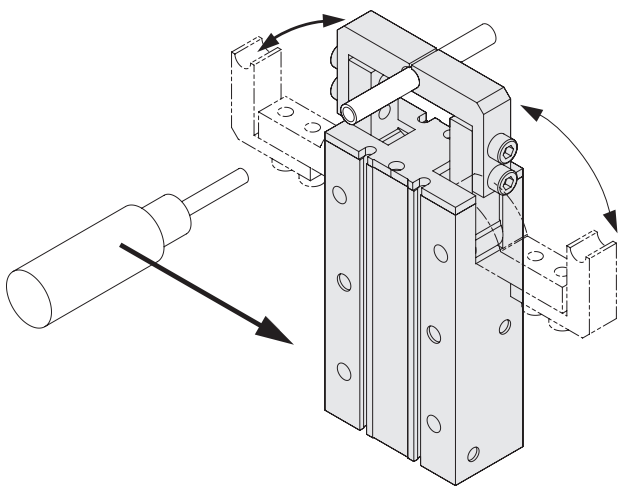

> Assembly

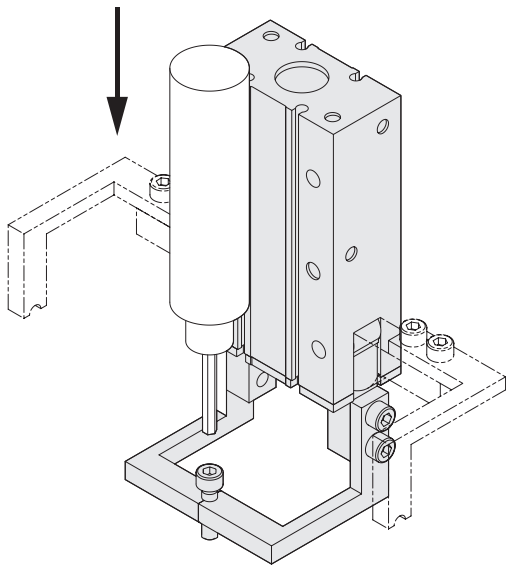

info@hidrafluid.es
976 24 32 10

Mounting brackets for parallel and angular grippers

Product notes

> Brackets for mounting parallel or angular grippers to extrusions
> Compatible with many brands of grippers due to slotted mounting holes

Technical data

Item no.	Suitable for	Weight [g]
GR06.050	GR04.122-10, GR04.123-10	14
GR06.051	GR04.122-16, GR04.123-16	16
GR06.052	GR04.122-20, GR04.123-20	52
GR06.053	GR04.122-25, GR04.123-25	56
GR06.054	GR04.122-32, GR04.123-32	110
GR06.055	GR04.122-32	152

Dimensions

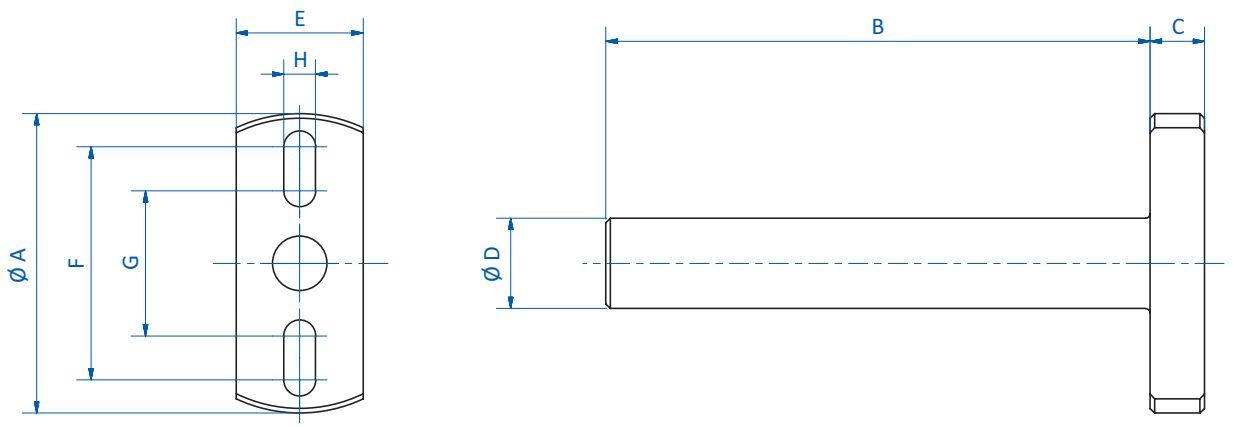

Item no.	Ø A [mm]	B [mm]	C [mm]	Ø D [mm]	E [mm]	F [mm]	G [mm]	H [mm]
GR06.050	33	60	6	10	14	25.7	16	3.5
GR06.051	39	60	6	14	18	32.5	22	4.5
GR06.052	49	90	8	20	24	40	30	5.5
GR06.053	59	90	8	20	24	50	32	6.5
GR06.054	64	120	8	30	32	53	44	6.5
GR06.055	79	120	10	30	40	64.5	56	8.5

FIPA challenge accepted
info@hidrafluid.es
976 24 32 10

Mounting brackets for 3-finger grippers

Product notes

> Brackets for mounting 3-finger parallel grippers to extrusions

Technical data

Item no.	Suitable for	Weight [g]
GR06.125-16	GR04.125-16L	18
GR06.125-25	GR04.125-25L	34
GR06.125-32	GR04.125-32L	74
GR06.125-40	GR04.125-40L	102
GR06.125-50	GR04.125-50L	232
GR06.125-60	GR04.125-60L	216
GR06.125-80	GR04.125-80L	388

Dimensions

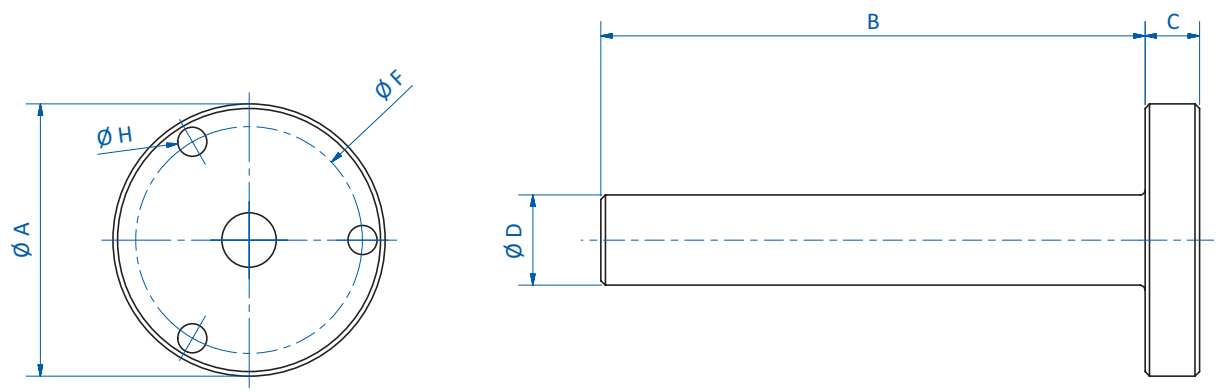

Item no.	Ø A [mm]	B [mm]	C [mm]	Ø D [mm]	Ø F [mm]	Ø H [mm]
GR06.125-16	30	60	6	10	25	3.2
GR06.125-25	42	90	6	14	34	4.2
GR06.125-32	52	90	8	20	44	4.2
GR06.125-40	62	120	8	20	53	5.3
GR06.125-50	70	150	8	30	62	5.3
GR06.125-60	86	150	8	30	76	6.3
GR06.125-80	106	150	10	30	95	6.3

info@hidrafluid.es
976 24 32 10

ID grippers for diameters from 3 - 10 mm

FOOD GRADE GRIPPER HEADS

Product notes

> Gripping within small recesses
> Expansion grippers for small or lightweight parts
> Compact and lightweight design
> Food grade gripper heads made of polyamide (FDA approved material)
> Body made of high-strength, anodized aluminum
> Gripper heads can be easily exchanged
> Optional monitoring of piston position
> ID grippers from Series GR04.F02-65 come with O-ring (food grade silicone) for improved holding force
> PNP and NPN sensors:
- C-slot (straight): GR04.198, GR04.198NPN

Technical data

Item no.	For parts having an inner Ø from/to [mm]	Optimal operating pressure [bar (psi)]	Clamping Ø [mm]	Weight [g]	Accessories
GR04.F01-35	3.5 - 3.9	6 (87)	14	21	Extension tube: GR06.021A (p.90) Sensor mounting bracket: GR04.038S (p.204) Sensor: GR04.198 (p.404) Sensor: GR04.198/NPN (p.404) ID gripper head – spare part: GR04.F01-A35
GR04.F01-40	4 - 4.4	6 (87)	14	21	Extension tube: GR06.021A (p.90) Sensor mounting bracket: GR04.038S (p.204) Sensor: GR04.198 (p.404) Sensor: GR04.198/NPN (p.404) ID gripper head – spare part: GR04.F01-A40
GR04.F01-45	4.5 - 4.9	6 (87)	14	21	Extension tube: GR06.021A (p.90) Sensor mounting bracket: GR04.038S (p.204) Sensor: GR04.198 (p.404) Sensor: GR04.198/NPN (p.404) ID gripper head – spare part: GR04.F01-A45
GR04.F02-50	5 - 5.4	6 (87)	14	21	Extension tube: GR06.021A (p.90) Sensor mounting bracket: GR04.038S (p.204) Sensor: GR04.198 (p.404) Sensor: GR04.198/NPN (p.404) ID gripper head – spare part: GR04.F02-A50
GR04.F02-55	5.5 - 5.9	6 (87)	14	21	Extension tube: GR06.021A (p.90) Sensor mounting bracket: GR04.038S (p.204) Sensor: GR04.198 (p.404) Sensor: GR04.198/NPN (p.404) ID gripper head – spare part: GR04.F02-A55
GR04.F02-60	6 - 6.4	6 (87)	14	21	Extension tube: GR06.021A (p.90) Sensor mounting bracket: GR04.038S (p.204) Sensor: GR04.198 (p.404) Sensor: GR04.198/NPN (p.404) ID gripper head – spare part: GR04.F02-A60
GR04.F02-65	6.5 - 6.9	6 (87)	14	21	Extension tube: GR06.021A (p.90) Sensor mounting bracket: GR04.038S (p.204) Sensor: GR04.198 (p.404) Sensor: GR04.198/NPN (p.404) ID gripper head – spare part: GR04.F02-A65

FIPA challenge accepted

info@hidrafluid.es
976 24 32 10

Technical data

Item no.	For parts having an inner Ø from/to [mm]	Optimal operating pressure [bar (psi)]	Clamping Ø [mm]	Weight [g]	Accessories
GR04.F02-70	7 - 7.4	6 (87)	14	21	Extension tube: GR06.021A (p.90) Sensor mounting bracket: GR04.038S (p.204) Sensor: GR04.198 (p.404) Sensor: GR04.198/NPN (p.404) ID gripper head – spare part: GR04.F02-A70
GR04.F02-75	7.5 - 7.9	6 (87)	14	21	Extension tube: GR06.021A (p.90) Sensor mounting bracket: GR04.038S (p.204) Sensor: GR04.198 (p.404) Sensor: GR04.198/NPN (p.404) ID gripper head – spare part: GR04.F02-A75
GR04.F02-80	8 - 8.4	6 (87)	14	21	Extension tube: GR06.021A (p.90) Sensor mounting bracket: GR04.038S (p.204) Sensor: GR04.198 (p.404) Sensor: GR04.198/NPN (p.404) ID gripper head – spare part: GR04.F02-A80
GR04.F02-85	8.5 - 8.9	6 (87)	14	21	Extension tube: GR06.021A (p.90) Sensor mounting bracket: GR04.038S (p.204) Sensor: GR04.198 (p.404) Sensor: GR04.198/NPN (p.404) ID gripper head – spare part: GR04.F02-A85
GR04.F02-90	9 - 9.4	6 (87)	14	21	Extension tube: GR06.021A (p.90) Sensor mounting bracket: GR04.038S (p.204) Sensor: GR04.198 (p.404) Sensor: GR04.198/NPN (p.404) ID gripper head – spare part: GR04.F02-A90
GR04.F02-95	9.5 - 9.9	6 (87)	14	21	Extension tube: GR06.021A (p.90) Sensor mounting bracket: GR04.038S (p.204) Sensor: GR04.198 (p.404) Sensor: GR04.198/NPN (p.404) ID gripper head – spare part: GR04.F02-A95
GR04.F02-100	10 - 10.4	6 (87)	14	21	Extension tube: GR06.021A (p.90) Sensor mounting bracket: GR04.038S (p.204) Sensor: GR04.198 (p.404) Sensor: GR04.198/NPN (p.404) ID gripper head – spare part: GR04.F02-A100

Dimensions

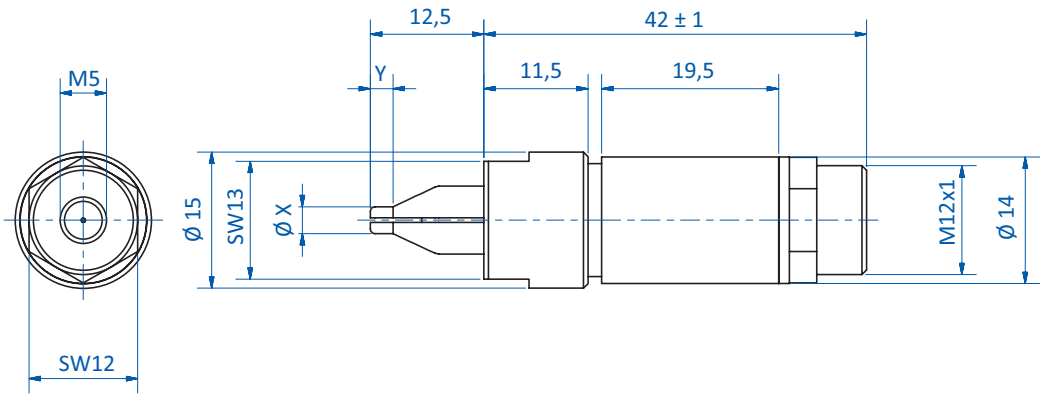

GR04.F01-35 | GR04.F01-40 | GR04.F01-45 | GR04.F02-50 | GR04.F02-55 | GR04.F02-60

* = O-ring ID gripper from Series GR04.F02-65

Continued on the next page

info@hidrafluid.es
976 24 32 10

Dimensions

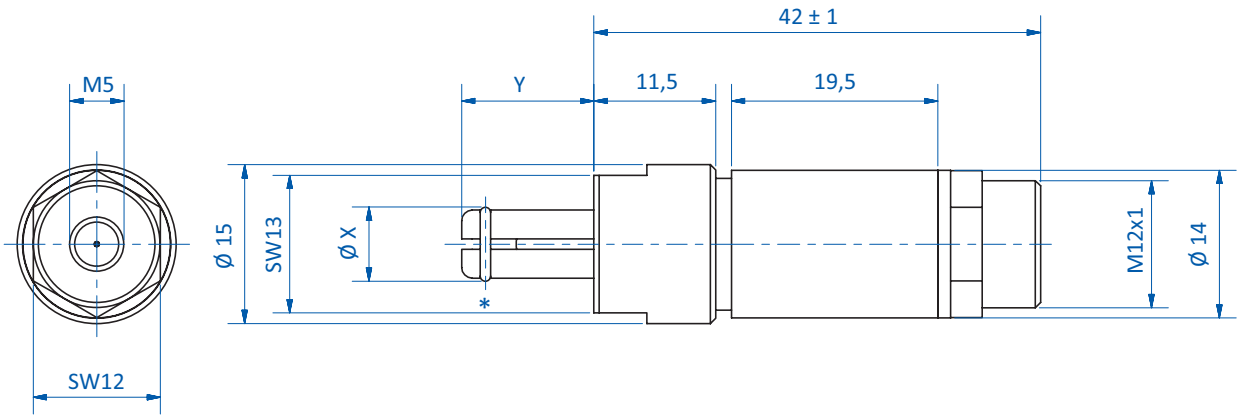

GR04.F02-65 | GR04.F02-70 | GR04.F02-75 | GR04.F02-80 | GR04.F02-85 | GR04.F02-90 | GR04.F02-95 | GR04.F02-100

* = O-ring ID gripper from Series GR04.F02-65

Item no.	**X** [mm]	**Y** [mm]
GR04.F01-35	3	2.5
GR04.F01-40	3.5	3.5
GR04.F01-45	4	5
GR04.F02-50	4.5	5
GR04.F02-55	5	5
GR04.F02-60	5.5	5
GR04.F02-65	6.5	5.5
GR04.F02-70	7	12.5
GR04.F02-75	7.5	12.5
GR04.F02-80	8	12.5
GR04.F02-85	8.5	12.5
GR04.F02-90	9	12.5
GR04.F02-95	9.5	12.5
GR04.F02-100	10	12.5

FIPA challenge accepted
info@hidrafluid.es
976 24 32 10

ID grippers for diameters 8 - 81 mm

Product notes

> Single-acting grippers with high holding force
> Gripper bellow expanded by pneumatically driven piston, clamps workpiece at its inner surface
> Ventilation of gripper resets piston and bellow and releases workpiece
> Piston movement adjustable to position of gripped object
> Holding force controlled by feed pressure
> Robust body, made of anodized, high-strength aluminum alloy
> Elastomer bellows available in EPDM or silicone
> Easy and non-destructive exchange of bellows
> Piston movement adjustable to position of gripped object, bellow is not inflated, no risk of bursting

Downward piston movement (workpiece pushed):
> Clamp the black part of gripper body or using optional extension tubes or threaded mounting brackets
Upward piston movement (workpiece drawn):
> Clamp the red part of gripper body

Technical data

Item no.	Elastomer	For parts having an inner Ø from/to [mm]	Optimal operating pressure [bar (psi)]	Weight [g]	Accessories
GR04.F208	EPDM	8 - 10	8 (116)	25	Extension tube: GR06.034 (p.249), EPDM elastomer: GR04.208-1, Mounting bracket: GR02.280 (p.250), Mounting bracket: GR02.227 (p.251)
GR04.F208-SI	Silicone	8 - 10	8 (116)	25	Extension tube: GR06.034 (p.249), Silicone elastomer: GR04.208-2, Mounting bracket: GR02.280 (p.250), Mounting bracket: GR02.227 (p.251)
GR04.F210	EPDM	10.5 - 13	8 (116)	26	Extension tube: GR06.034 (p.249), EPDM elastomer: GR04.210-1, Mounting bracket: GR02.280 (p.250), Mounting bracket: GR02.227 (p.251)
GR04.F210-SI	Silicone	10.5 - 13	8 (116)	26	Extension tube: GR06.034 (p.249), Silicone elastomer: GR04.210-2, Mounting bracket: GR02.280 (p.250), Mounting bracket: GR02.227 (p.251)
GR04.F212	EPDM	13 - 17	8 (116)	28	Extension tube: GR06.034 (p.249), EPDM elastomer: GR04.212-1, Mounting bracket: GR02.280 (p.250), Mounting bracket: GR02.227 (p.251)
GR04.F212-SI	Silicone	13 - 17	8 (116)	28	Extension tube: GR06.034 (p.249), Silicone elastomer: GR04.212-2, Mounting bracket: GR02.280 (p.250), Mounting bracket: GR02.227 (p.251)
GR04.F214	EPDM	15 - 19	8 (116)	31	Extension tube: GR06.034 (p.249), EPDM elastomer: GR04.214-1, Mounting bracket: GR02.280 (p.250), Mounting bracket: GR02.227 (p.251)
GR04.F214-SI	Silicone	15 - 19	8 (116)	31	Extension tube: GR06.034 (p.249), Silicone elastomer: GR04.214-2, Mounting bracket: GR02.280 (p.250), Mounting bracket: GR02.227 (p.251)
GR04.F218	EPDM	19 - 23.5	8 (116)	53	Extension tube: GR06.034 (p.249), EPDM elastomer: GR04.218-1, Mounting bracket: GR02.281 (p.250), Mounting bracket: GR02.227 (p.251)
GR04.F218-SI	Silicone	19 - 23.5	8 (116)	53	Extension tube: GR06.034 (p.249), Silicone elastomer: GR04.218-2, Mounting bracket: GR02.281 (p.250), Mounting bracket: GR02.227 (p.251)
GR04.F222	EPDM	23.5 - 31	8 (116)	83	Extension tube: GR06.035 (p.249), EPDM elastomer: GR04.222-1, Mounting bracket: GR02.282 (p.250), Mounting bracket: GR02.228 (p.251)
GR04.F222-SI	Silicone	23.5 - 31	8 (116)	83	Extension tube: GR06.035 (p.249), Silicone elastomer: GR04.222-2, Mounting bracket: GR02.282 (p.250), Mounting bracket: GR02.228 (p.251)
GR04.F227	EPDM	29 - 36.5	8 (116)	117	Extension tube: GR06.035 (p.249), EPDM elastomer: GR04.227-1, Mounting bracket: GR02.283 (p.250), Mounting bracket: GR02.228 (p.251)

Continued on the next page

info@hidrafluid.es
976 24 32 10

Technical data

Item no.	Elastomer	For parts having an inner Ø from/to [mm]	Optimal operating pressure [bar (psi)]	Weight [g]	Accessories
GR04.F227-SI	Silicone	29 - 36.5	8 (116)	117	Extension tube: GR06.035 (p.249), Silicone elastomer: GR04.227-2, Mounting bracket: GR02.283 (p.250), Mounting bracket: GR02.228 (p.251)
GR04.F233	EPDM	34 - 44	8 (116)	182	Extension tube: GR06.036 (p.249), EPDM elastomer: GR04.233-1, Mounting bracket: GR02.284 (p.250), Mounting bracket: GR02.229 (p.251)
GR04.F233-SI	Silicone	34 - 44	8 (116)	182	Extension tube: GR06.036 (p.249), Silicone elastomer: GR04.233-2, Mounting bracket: GR02.284 (p.250), Mounting bracket: GR02.229 (p.251)
GR04.F241	EPDM	41 - 58	8 (116)	364	Extension tube: GR06.036 (p.249), EPDM elastomer: GR04.241-1, Mounting bracket: GR02.285 (p.250), Mounting bracket: GR02.229 (p.251)
GR04.F241-SI	Silicone	41 - 58	8 (116)	364	Extension tube: GR06.036 (p.249), Silicone elastomer: GR04.241-2, Mounting bracket: GR02.285 (p.250), Mounting bracket: GR02.229 (p.251)
GR04.F251	EPDM	52 - 64	8 (116)	611	Extension tube: GR06.037 (p.249), EPDM elastomer: GR04.251-1, Mounting bracket: GR02.286 (p.250), Mounting bracket: GR02.232 (p.86)
GR04.F251-SI	Silicone	52 - 64	8 (116)	611	Extension tube: GR06.037 (p.249), Silicone elastomer: GR04.251-2, Mounting bracket: GR02.286 (p.250), Mounting bracket: GR02.232 (p.86)
GR04.F263	EPDM	63 - 81	8 (116)	1,051	EPDM elastomer: GR04.263-1, Mounting bracket: GR02.287 (p.250), Mounting bracket: GR02.233 (p.251)
GR04.F263-SI	Silicone	63 - 81	8 (116)	1,051	Silicone elastomer: GR04.263-2, Mounting bracket: GR02.287 (p.250), Mounting bracket: GR02.233 (p.251)

Elastomer replacement

EPDM [included in delivery] Color black	**Silicone** Color red
> Non-marking > Heat-resistant to 130 °C (266 °F)	> Very long service life > Heat-resistant to 200 °C (392 °F)

Dimensions

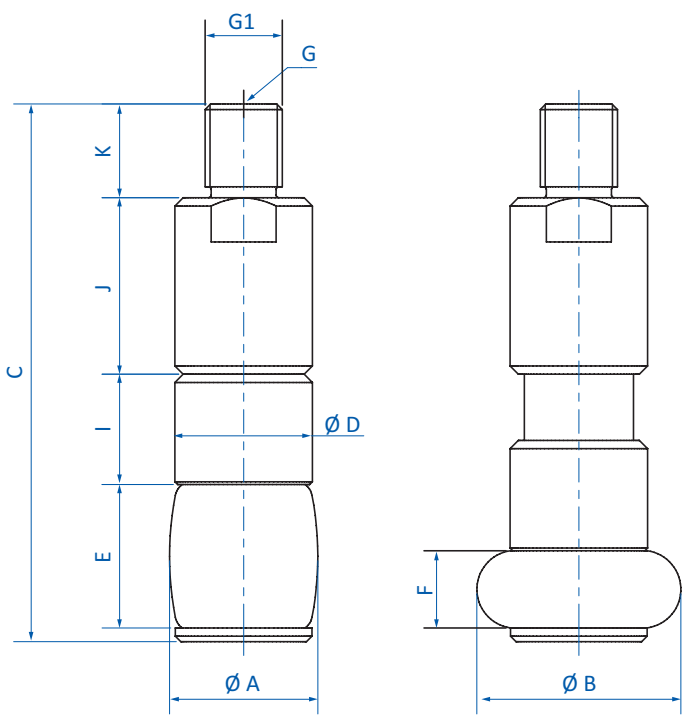

info@hidrafluid.es
976 24 32 10

Item no.	G	G1	Ø A [mm]	Ø B [mm]	C [mm]	Ø D [mm]	E [mm]	F [mm]	I [mm]	J [mm]	K [mm]
GR04.F208	M5	M12x1.5	8	10	67	16	7	3.5	11	23	15
GR04.F208-SI	M5	M12x1.5	8	10	67	16	7	3.5	11	23	15
GR04.F210	M5	M12x1.5	10.5	13	69	16	8.5	4.5	11	23	15
GR04.F210-SI	M5	M12x1.5	10.5	13	69	16	8.5	4.5	11	23	15
GR04.F212	M5	M12x1.5	13	17	71	16	10.5	5	11	23	15
GR04.F212-SI	M5	M12x1.5	13	17	71	16	10.5	5	11	23	15
GR04.F214	M5	M12x1.5	15	19	73	16	13	6	11	23	15
GR04.F214-SI	M5	M12x1.5	15	19	73	16	13	6	11	23	15
GR04.F218	M5	M12x1.5	19	23.5	78	20	16.5	9	20	23.5	15
GR04.F218-SI	M5	M12x1.5	19	23.5	78	20	16.5	9	20	23.5	15
GR04.F222	M5	M14x1,5	23.5	31	93	23	21	9	20	32	17
GR04.F222-SI	M5	M14x1,5	23.5	31	93	23	21	9	20	32	17
GR04.F227	M5	M14x1,5	29	36.5	98	25	26	14	20	32	17
GR04.F227-SI	M5	M14x1,5	29	36.5	98	25	26	14	20	32	17
GR04.F233	G1/8	M16x1.5	34	44	113	30	33.5	24	20	37.5	19
GR04.F233-SI	G1/8	M16x1.5	34	44	113	30	33.5	24	20	37.5	19
GR04.F241	G1/8	M16x1.5	41	58	138	40	41.5	14	20	54.5	19
GR04.F241-SI	G1/8	M16x1.5	41	58	138	40	41.5	14	20	54.5	19
GR04.F251	G1/8	M20x1.5	52	64	148	50	53	35	30	42	19
GR04.F251-SI	G1/8	M20x1.5	52	64	148	50	53	35	30	42	19
GR04.F263	G1/8	M24x1.5	63	81	176	60	61	36	36	56	19
GR04.F263-SI	G1/8	M24x1.5	63	81	176	60	61	36	36	56	19

Installation examples

> Clamping the upper part of gripper body enables downward piston movement (workpiece pushed) GR02.280 - GR02.287

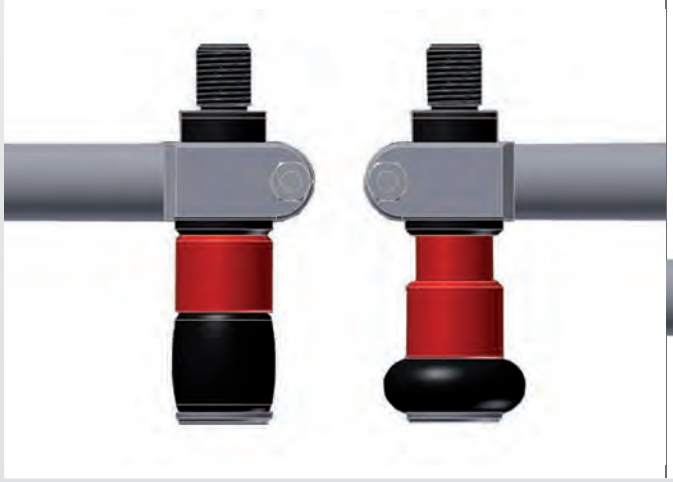

> Clamping the lower gripper body enables upward piston movement (workpiece drawn) GR02.280 - GR02.287

Continued on the next page

info@hidrafluid.es
976 24 32 10

Installation examples

> Clamping to extension tubes enables downward piston movement (workpiece pushed) GR06.034 - GR06.037

> Fitting to threaded mounting brackets enables downward piston movement (workpiece pushed) GR02.227 - 229 and GR02.232 - GR02.233

> Application example

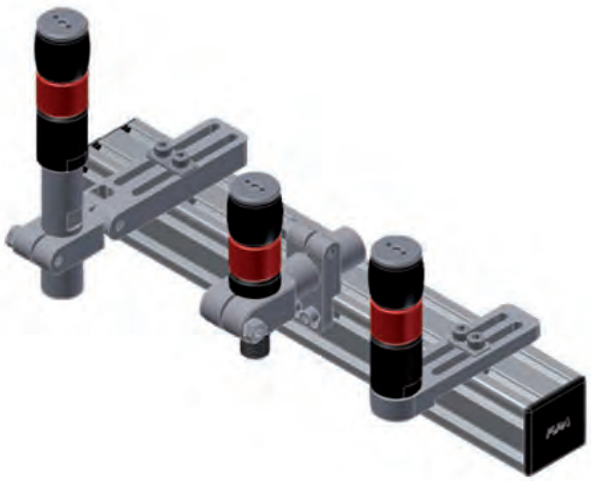

info@hidrafluid.es
976 24 32 10

Extension tubes for ID grippers

Product notes

> Extension tubes with rear-side compressed air connection and through hole
> For mounting ID grippers to angle clamps
> Suitable for ID grippers GR04 with index F
> Not compatible with ID grippers with index N

Technical data

Item no.	Suitable for	Weight [g]
GR06.034	GR04.F208 - GR04.F218	56
GR06.035	GR04.F222 - GR04.F227	54
GR06.036	GR04.F233 - GR04.F241	45
GR06.037	GR04.F251	118

Dimensions

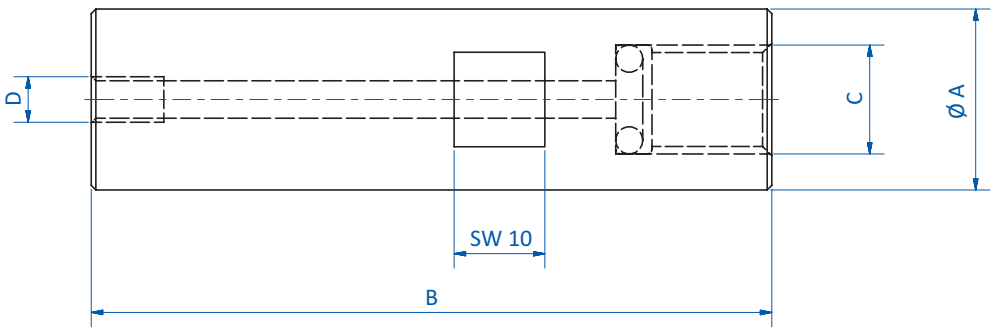

Item no.	Ø A [mm]	B [mm]	C	D
GR06.034	20	75	M12x1.5	M5
GR06.035	20	75	M14x1.5	M5
GR06.036	20	75	M16x1.5	G1/8
GR06.037	30	75	M20x1.5	G1/8

info@hidrafluid.es
976 24 32 10

Mounting brackets for ID grippers

Product notes

> Mounting brackets for variable angle installation of ID grippers
> Clamping grippers to upper part (red) enables upward movement, workpiece is drawn
> Clamping grippers to bottom part (black) or clamping to extension tube enables downward movement, workpiece is pushed
> Suitable for ID grippers GR04 with index F

Technical data

Item no.	Suitable for expansion grippers	Weight [g]
GR02.280	GR04.F208, GR04.F212, GR04.F214	18
GR02.281	GR04.F218	36
GR02.282	GR04.F222	40
GR02.283	GR04.F227	50
GR02.284	GR04.F233	57
GR02.285	GR04.F241	68
GR02.286	GR04.F251	145
GR02.287	GR04.F263	172

Dimensions

Ø A [mm]	B [mm]	C [mm]	D [mm]	E [mm]	F [mm]	G [mm]	Ø H [mm]
10	60	30	11	20	26	10	16
14	74	40	13	24	30	20	20
14	77	40	14.5	27	33	20	23
20	89	50	15.5	29	35	20	25
20	94	50	18	34	40	20	30
20	104	50	23	44	45	20	40
30	124	60	27	54	50	30	50
30	134	60	32	64	57	30	60

Dimensions

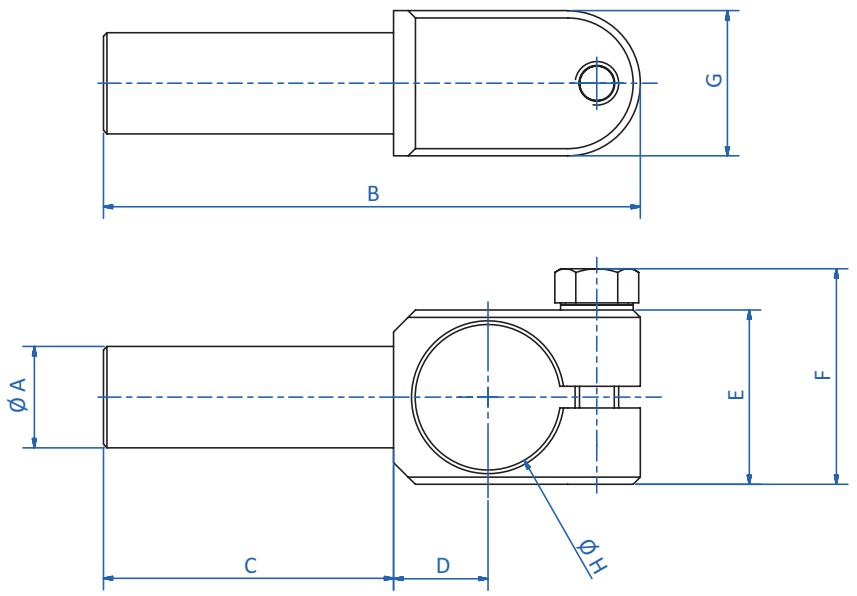

FIPA challenge accepted
info@hidrafluid.es
976 24 32 10

Threaded mounting brackets for ID grippers

Product notes

> Threaded mounting brackets for installation the grippers on profiles
> Threaded mounting bracket enables downward movement of piston of ID gripper, workpiece is pushed
> Suitable for ID grippers GR04 with index F
> Slot nuts and mounting screws included in scope of delivery

Technical data

Item no.	Suitable for expansion grippers	Weight [g]
GR02.227	GR04.F208 - GR04.F218	50
GR02.228	GR04.F222 - GR04.F227	53
GR02.229	GR04.F233 - GR04.F241	57
GR02.232	GR04.F251	63
GR02.233	GR04.F263	70

Dimensions

A [mm]	B [mm]	C [mm]	D [mm]	E [mm]	F [mm]	G
22	99	23	55	12	8.5	M12x1.5
24	99	22	55	12	8.5	M14x1.5
26	99	21	55	12	8.5	M16x1.5
M20x1.5	28	110	12	8.5	65	21
32	110	21	65	12	8.5	M24x1.5

Dimensions

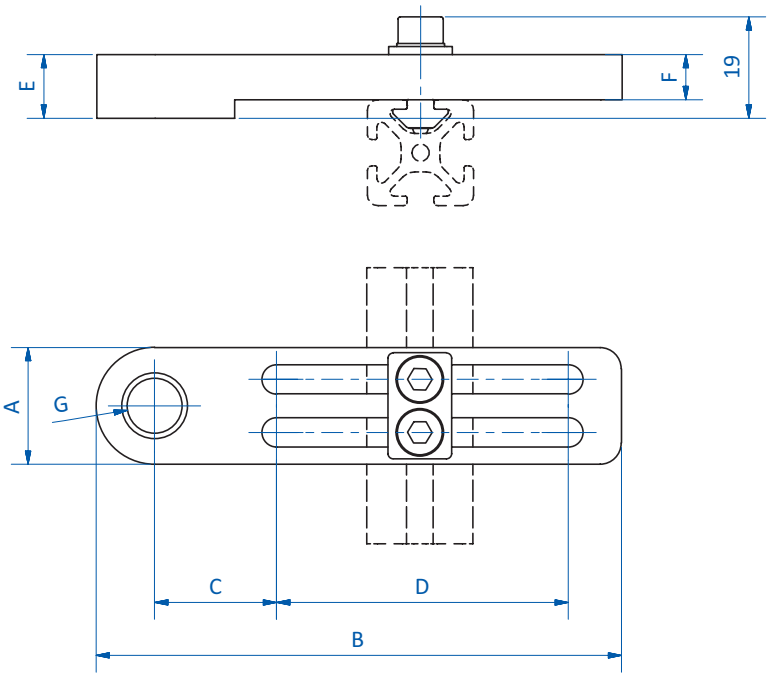

info@hidrafluid.es
976 24 32 10

Special ID & OD grippers

CUSTOM GRIPPERS FOR INSERTS

Special pneumatic ID gripper

Special vacuum OD gripper

Product notes

> Customized ID & OD grippers for inserts such as stem nuts or threaded bushings
> Gripper customized to workpiece specifications
> Pneumatically driven:
  - Clamping the workpiece with its inner contour
  - Single-acting or double-acting for short cycle times
> Vacuum-driven:
  - For gripping parts on the face if ID pick-up is not permitted
> Lightweight and compact housing, made from aluminum or brass
> Dimensioned items below are for illustration only and not available as standard
> We will be happy to develop the gripper that matches your application

Dimensions

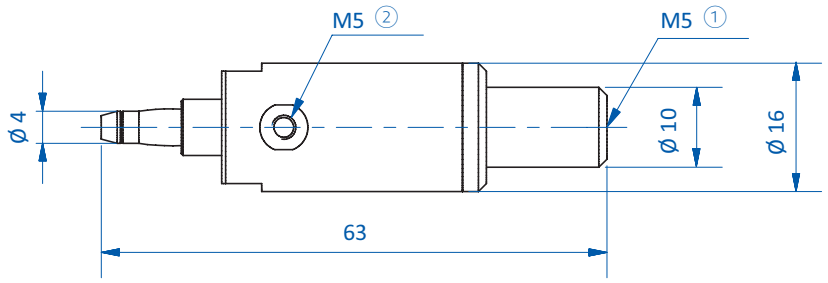

GR09.xx2

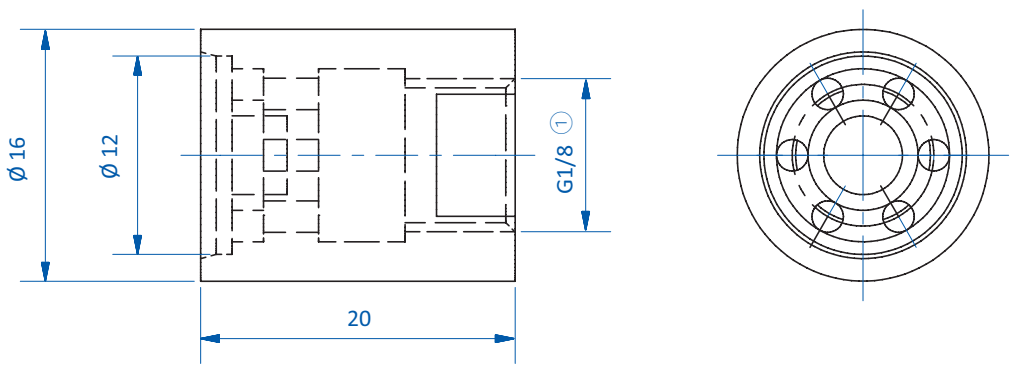

GR09.xx3

① = Compressed air connection for extending the piston ② = Compressed air connection for stripping for product release ① = Vacuum connection

FIPA challenge accepted
info@hidrafluid.es
976 24 32 10

Notes:

info@hidrafluid.es
976 24 32 10

FIPA Special grippers

Needle grippers

> For materials that are non-dimensionally stable or difficult to handle with vacuum
> Alignment to material thickness via adjustable lift
> Double-acting, enables short duty cycles

> See page 256

Needle grippers – slim design, with sensor

> Internal lift guiding for extra slim design
> Sensor for monitoring gripper action via piston position (needles extracted/retracted)

> See page 257

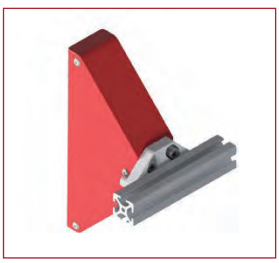

Mounting brackets for needle gripper

> Installation on SLine and MLine extrusion systems or on spring loaded suction fingers

> See page 267

info@hidrafluid.es
976 24 32 10

FIPA Special grippers

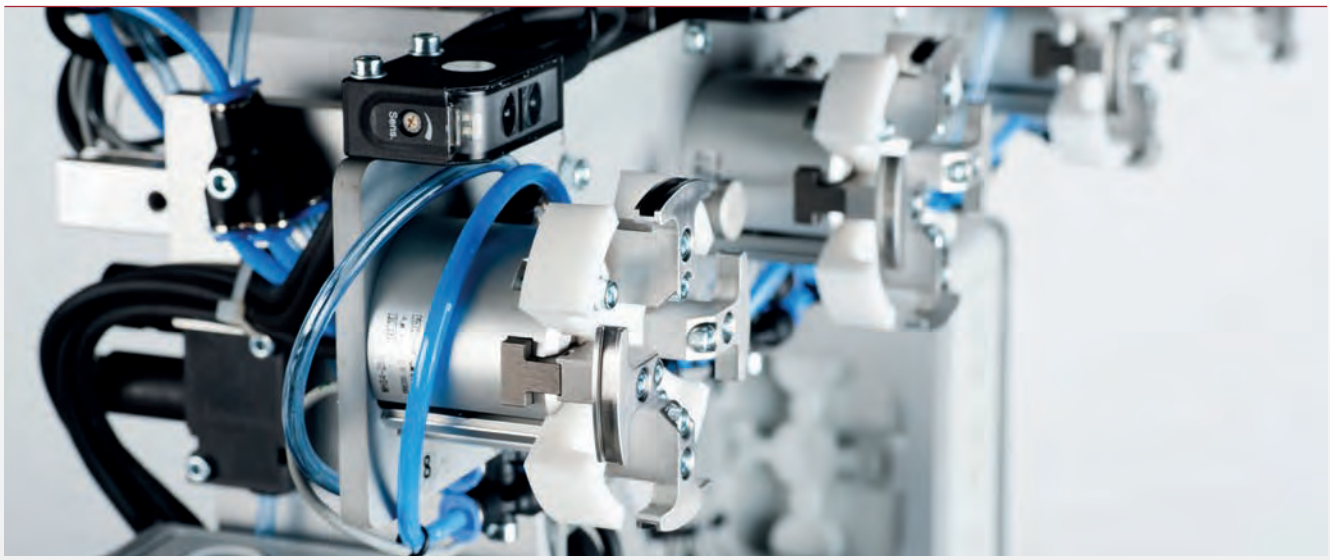

Magnetic grippers

> Secure handling of sheet metal and ferromagnetic workpieces with and without recesses

MG series

> Combination of electronic and permanent magnet
> High cycle times for thin and/or alloyed metal sheets thanks to negligible residual magnetism after switching off the magnetic force
> Holding force up to 700 N
> No compressed air required
> Very energy-efficient, as a short electrical pulse is only required for product release

> See page 269

Bernoulli vacuum cups – SX-B and SX-B-PK

> Non-contact, deformation-resistant transport of thin and sensitive products
> No ejector, requires compressed air only
> Suitable for porous products thanks to high volume flow
> Series for direct contact with food (approval in accordance with FDA/EC1935/2004)

> See page 270

Modular grippers

> Customized gripper tools made of polyamide
> Easy adaption to robots
> Integrated media channels to minimize piping complexity
> Food grade material

> See page 278

info@hidrafluid.es
976 24 32 10

Needle grippers GR04.711

NEW

Product notes

> Gripper for materials that are non-dimensionally stable or difficult to handle with vacuum
> Stroke limitation by spacer plates
> Needles centrally crossed for firm grip
> Double-acting enables short duty cycles: separate compressed air connections for extraction/retraction of needles
> Needles can be individually replaced

Technical data

Item no.	GR04.711-25	GR04.711-40	GR04.711-60
Principle of operation	Double-acting	Double-acting	Double-acting
Stroke [mm]	2.5	4	6
Number of needles [Pcs.]	12	12	12
Needle diameter [mm]	2	2	2
Infeed angle [°]	30	30	30
Operating pressure [bar (psi)]	2.5 - 8 (36.3 - 116)	2.5 - 8 (36.3 - 116)	2.5 - 8 (36.3 - 116)
Operating temperature [°C (°F)]	-10 - 60 (14 - 140)	-10 - 60 (14 - 140)	-10 - 60 (14 - 140)
Weight [g]	313	311	310
Suitable spare needle block	GR04.711-P4	GR04.711-P4	GR04.711-P4

Dimensions

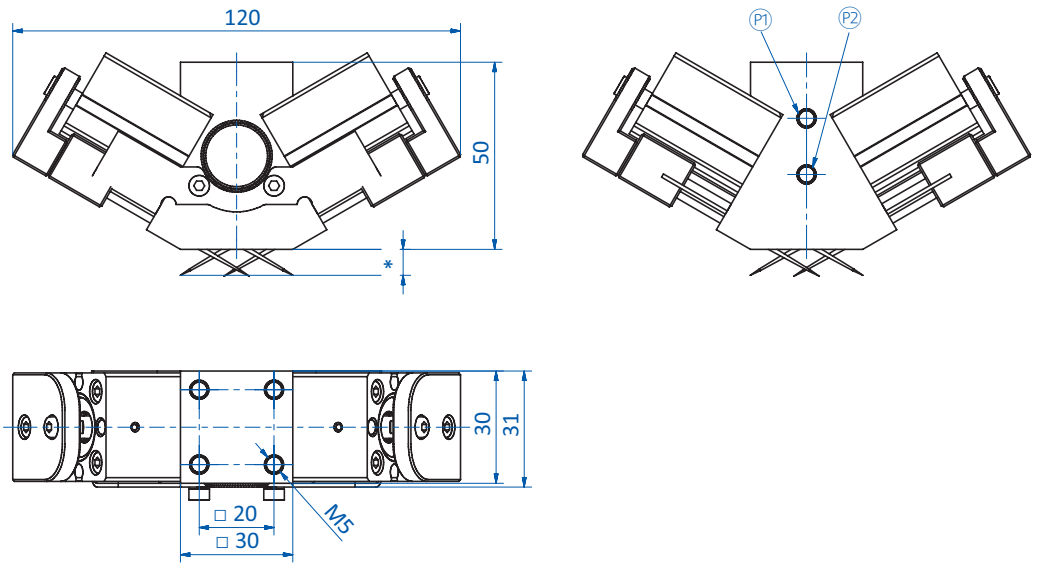

P1 = Compressed air connection M5 needles extended P2 = Compressed air connection M5 needles retracted * = Stroke

info@hidrafluid.es
976 24 32 10

Needle grippers GR04.740B

Product notes

> Slim design due to internal stroke guiding
> Gripper for materials that are non-dimensionally stable or difficult to handle with vacuum
> Alignment to material thickness via adjustable stroke
> Double-acting, enables short duty cycles, separate compressed air connections for extraction/retraction of needles
> Internal stroke guiding for extra slim design
> Sensor for monitoring gripper action via piston position (needles extracted/retracted)
> Stroke corresponds to maximum entry depth of needles
> Sensors and spare needle sets with ten needles each, available as accessories
> PNP and NPN sensors:
- C-nut (cable: 90°): GR04.202P, GR04.202N
- C-nut (cable: straight, short design): GR04.280P, GR04.280N

Technical data

Item no.	**GR04.740B**
Principle of operation	Double-acting
Stroke [mm]	0 - 3
Number of needles [Pcs.]	4
Needle diameter [mm]	2
Infeed angle [°]	45
Operating pressure [bar (psi)]	2 - 8 (29 - 116)
Operating temperature [°C (°F)]	-10 - 80 (14 - 176)
Weight [g]	226
Accessories	Spare needle kit: GR04.740-30N Sensor: GR04.280N (p.404) Sensor: GR04.280P (p.404) Sensor: GR04.202N (p.404) Sensor: GR04.202P (p.404)

Continued on the next page

info@hidrafluid.es
976 24 32 10

Dimensions

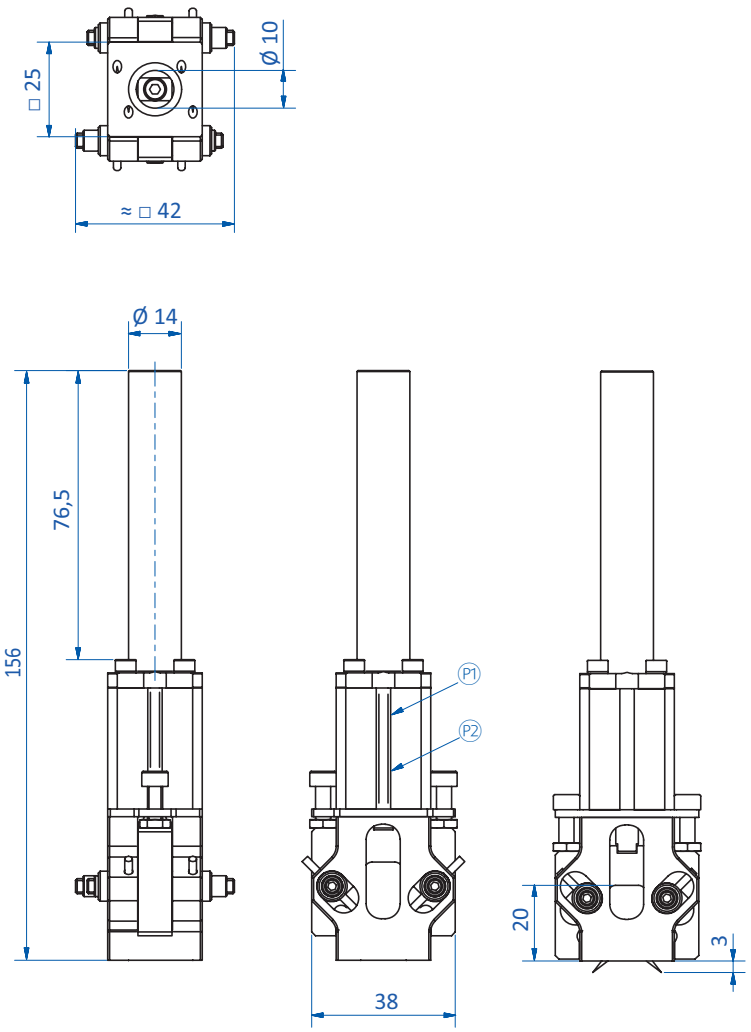

P1 = Compressed air connection M5 needles extended P2 = Compressed air connection M5 needles retracted

FIPA challenge accepted
info@hidrafluid.es
976 24 32 10

Needle grippers GR04.700 and GR04.730

GR04.700

GR04.730

Product notes

> Small needle diameter for low entry depth, blow-off function for fast product release
> Grippers with flat entry angle enables handling of thin or flat parts
> Knurled screw for stroke adjustment to textile thickness
> GR04.700: double-acting enables short duty cycles: separate compressed air connections for extraction/retraction of needles
- Additional compressed air inlet (A) for fast product release
> GR04.730: single-acting, compressed air connection for needle extraction, reset via return spring
> Stroke corresponds to maximum entry depth of needles
> Spare needle plates available as accessories

Technical data

Item no.	GR04.700-20	GR04.700-25	GR04.730-20
Principle of operation	Double-acting	Double-acting	Single-acting
Stroke [mm]	0 - 2	0 - 2.5	0 - 2
Number of needles [Pcs.]	32	32	32
Needle diameter [mm]	0.7	0.7	0.7
Infeed angle [°]	30	30	30
Operating pressure [bar (psi)]	4 - 7 (58 - 101.5)	4 - 7 (58 - 101.5)	4 - 7 (58 - 101.5)
Operating temperature [°C (°F)]	-0 - 70 (32 - 158)	-0 - 70 (32 - 158)	-0 - 70 (32 - 158)
Weight [g]	114	114	250
Accessories	Spare needle kit: GR04.700-20N Mounting bracket: GR07.040 (p.267)	Spare needle kit: GR04.700-25N Mounting bracket: GR07.040 (p.267)	Spare needle kit: GR04.730-20N Mounting bracket: GR07.041 (p.267)

Continued on the next page

info@hidrafluid.es
976 24 32 10

Dimensions

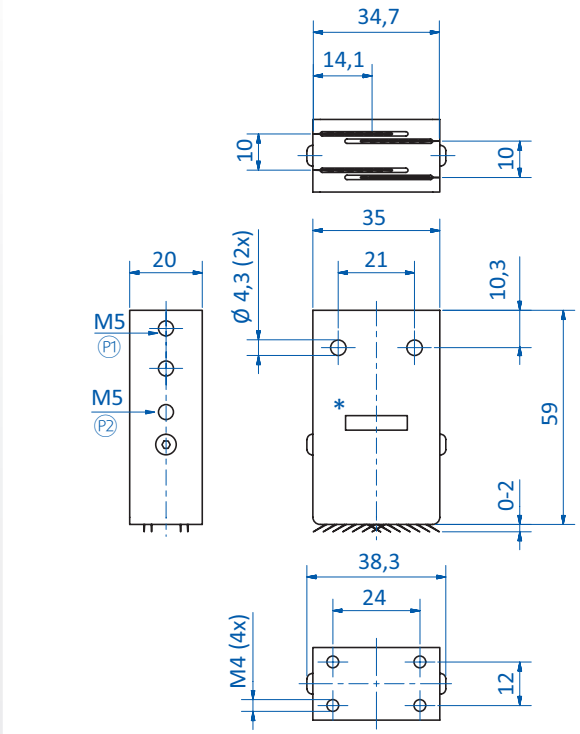

GR04.700-20

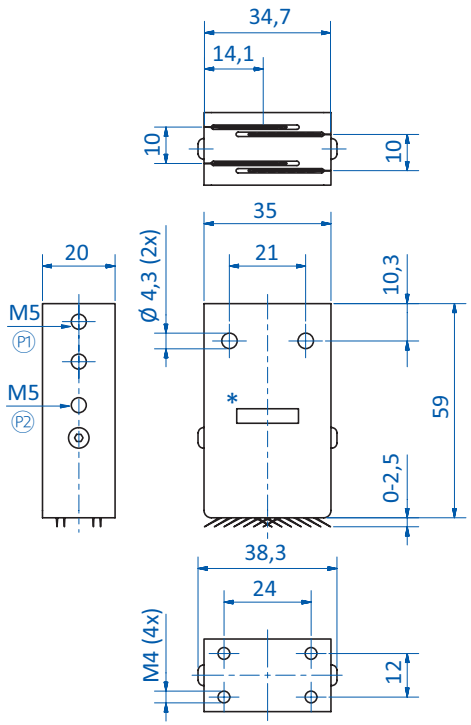

GR04.700-25

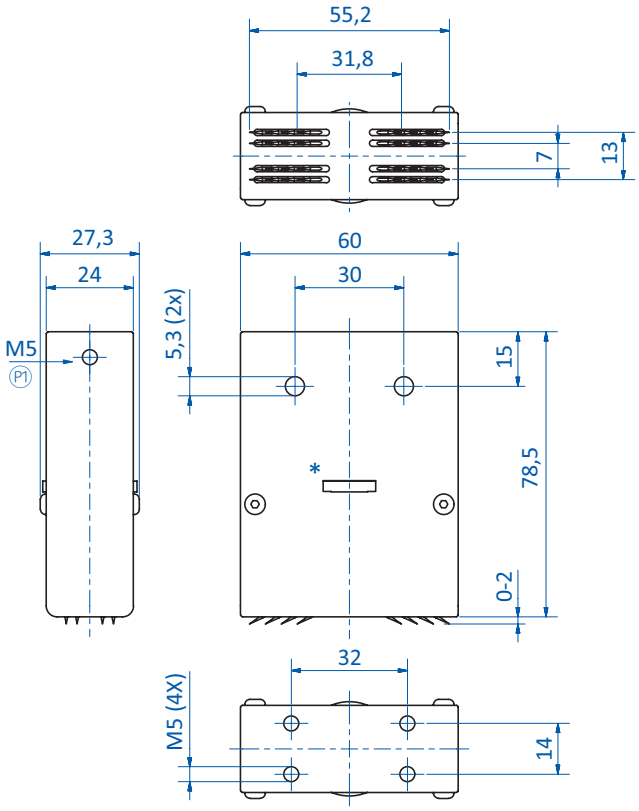

GR04.730-20

* = Stroke adjustment with knurled screw P1 = Compressed air connection M5 needles extended
P2 = Compressed air connection M5 needles retracted

FIPA challenge accepted
info@hidrafluid.es
976 24 32 10

Needle grippers GR04.710 and GR04.720

GR04.710

GR04.720 with spring load

Product notes

> Strokes adjustable to material thickness
> Grippers for materials that are non-dimensionally stable or difficult to handle with vacuum
> Central bore hole (Ø 10 mm) to allow insertion of gripper into stack rails for pick & place
> Stroke limitation adjustable to material thickness
> Needles centrally crossed for firm grip
> Double-acting enables short duty cycles: separate compressed air connections for extraction/retraction of needles
> Needles can be individually replaced
> Spare needle sets, each containing ten pieces available

Technical data

Item no.	GR04.710-25	GR04.710-50	GR04.710-75	GR04.710-100	GR04.720-25	GR04.720-50
Principle of operation	Double-acting	Double-acting	Double-acting	Double-acting	Double-acting	Double-acting
Stroke [mm]	0 - 2.5	0 - 5	0 - 7.5	0 - 10	0 - 2.5	0 - 5
Stroke suspensions [mm]	--	--	--	--	35	35
Number of needles [Pcs.]	10	10	10	10	10	10
Needle diameter [mm]	2	2	2	2	2	2
Infeed angle [°]	30	30	30	30	30	30
Operating pressure [bar (psi)]	2 - 8 (29 - 116)	2 - 8 (29 - 116)	2 - 8 (29 - 116)	2 - 8 (29 - 116)	2 - 8 (29 - 116)	2 - 8 (29 - 116)
Operating temperature [°C (°F)]	-10 - 80 (14 - 176)	-10 - 80 (14 - 176)	-10 - 80 (14 - 176)	-10 - 80 (14 - 176)	-10 - 80 (14 - 176)	-10 - 80 (14 - 176)
Weight [g]	240	298	310	340	492	512
Accessories	Spare needle kit: GR04.710-50N Mounting bracket: GR07.040 (p.267)	Spare needle kit: GR04.710-50N Mounting bracket: GR07.040 (p.267)	Spare needle kit: GR04.710-75AN Spare needle kit: GR04.710-75N Mounting bracket: GR07.040 (p.267)	Spare needle kit: GR04.710-75AN Spare needle kit: GR04.710-75N Mounting bracket: GR07.040 (p.267)	Spare needle kit: GR04.720-25N	Spare needle kit: GR04.720-25N

Continued on the next page

info@hidrafluid.es
976 24 32 10

Dimensions

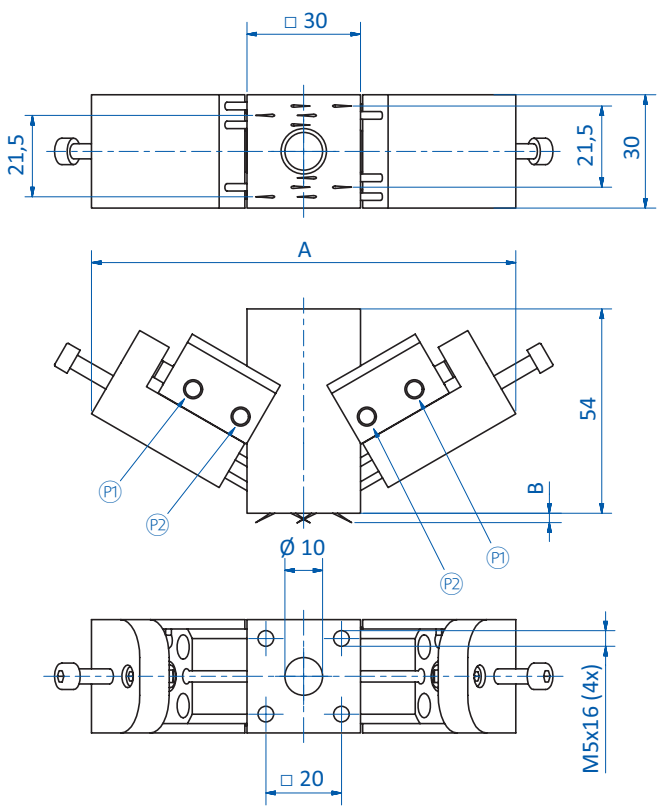

GR04.710-25 | GR04.710-50 | GR04.710-75 | GR04.710-100

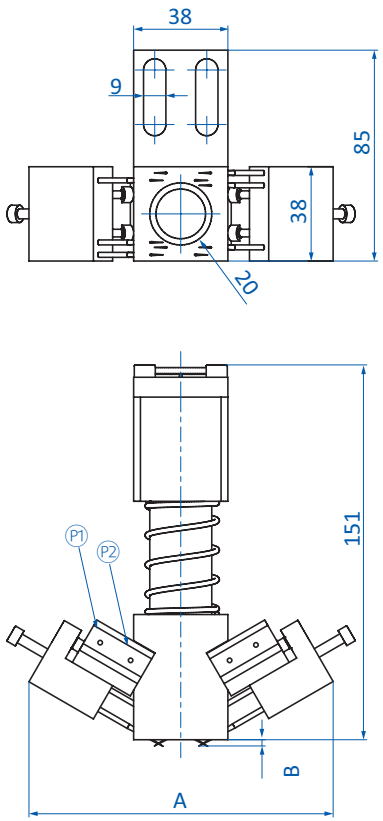

GR04.720-25 | GR04.720-50

Ⓟ1 = Compressed air connection M5 needles extended Ⓟ2 = Compressed air connection M5 needles retracted

Item no.	GR04.710-25	GR04.710-50	GR04.710-75	GR04.710-100	GR04.720-25	GR04.720-50
A [mm]	111.5 - 123	120 - 138	128 - 154	138.5 - 173	123 - 131.5	131.5 - 149
B [mm]	0 - 2.7	0 - 5	0 - 7.5	0 - 10	0 - 2.5	0 - 5

info@hidrafluid.es
976 24 32 10

Needle grippers GR04.715

RETRACTION OF NEEDLES CAN BE CONTROLLED SEPARATELY FOR BOTH SIDES

Product notes

> Grippers for workpieces or materials that are non-dimensionally stable or difficult to handle with vacuum
> Narrow design
> Stroke can be adjusted to material thickness
> Double-acting enables short duty cycles: separate compressed air connections for extraction/retraction of needles on the face-side, alternatively one connection/each for separate extraction, one connection for central retraction
> Needles can be individually replaced
> Spare needle sets, each containing ten pieces available

Technical data

Item no.	**GR04.715-70**
Principle of operation	Double-acting
Stroke [mm]	0 - 7
Number of needles [Pcs.]	6
Needle diameter [mm]	2
Infeed angle [°]	30
Operating pressure [bar (psi)]	2 - 8 (29 - 116)
Operating temperature [°C (°F)]	-10 - 80 (14 - 176)
Weight [g]	195
Accessories	Spare needle kit: GR04.715-70N Mounting bracket: GR07.042 (p.268)

Continued on the next page

info@hidrafluid.es
976 24 32 10

Dimensions

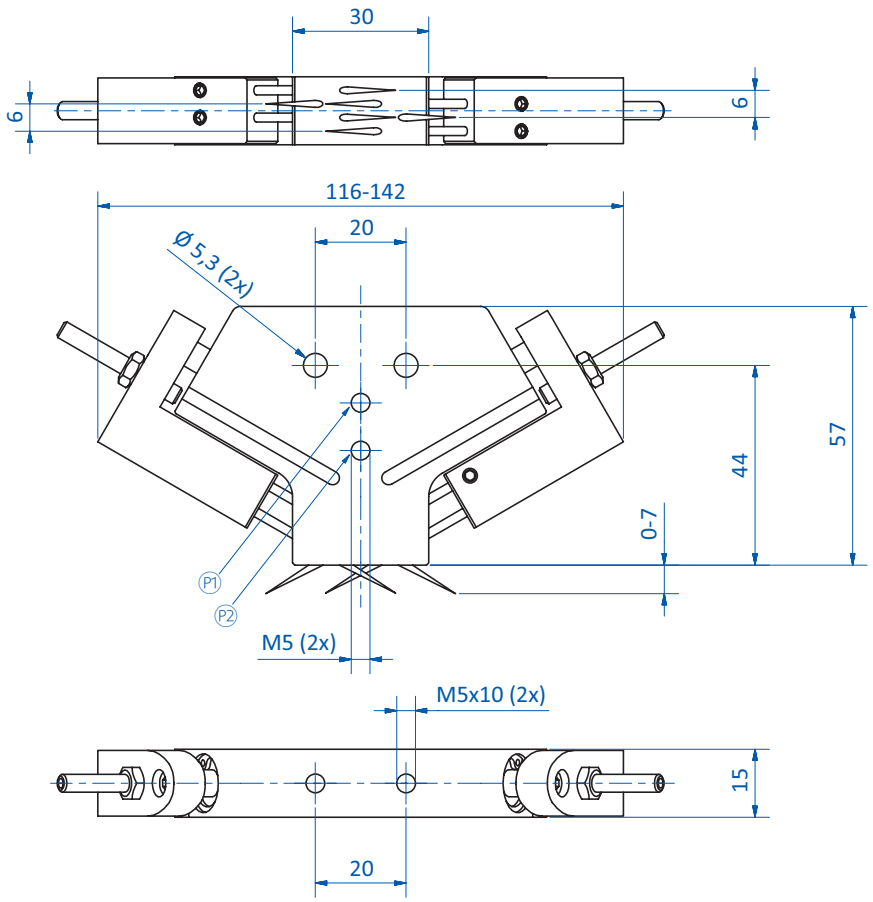

P1 = Bore holes M5 for separate extraction of needles per side P2 = Bore hole M5 for central retraction of needles

info@hidrafluid.es
976 24 32 10

Needle grippers GR04.725

ESPECIALLY SUITED FOR HANDLING HEAVIER WORKPIECES

Product notes

> Grippers for materials that are non-dimensionally stable or difficult to handle with vacuum
> Stroke can be adjusted to material thickness
> Double-acting enables short duty cycles: separate compressed air connections for extraction/retraction of needles
> Spare needle plates, available

Technical data

Item no.	GR04.725-60	GR04.725-90
Principle of operation	Double-acting	Double-acting
Stroke [mm]	6	9
Number of needles [Pcs.]	32	32
Needle diameter [mm]	2	2
Infeed angle [°]	45	45
Max. gripping force [N]	360	360
Operating pressure [bar (psi)]	2 - 8 (29 - 116)	2 - 8 (29 - 116)
Operating temperature [°C (°F)]	-10 - 80 (14 - 176)	-10 - 80 (14 - 176)
Weight [g]	450	480
Accessories	Spare needle kit: GR04.725-60N Mounting bracket: GR07.041 (p.267)	Spare needle kit: GR04.725-90N Mounting bracket: GR07.041 (p.267)

Continued on the next page

info@hidrafluid.es
976 24 32 10

Dimensions

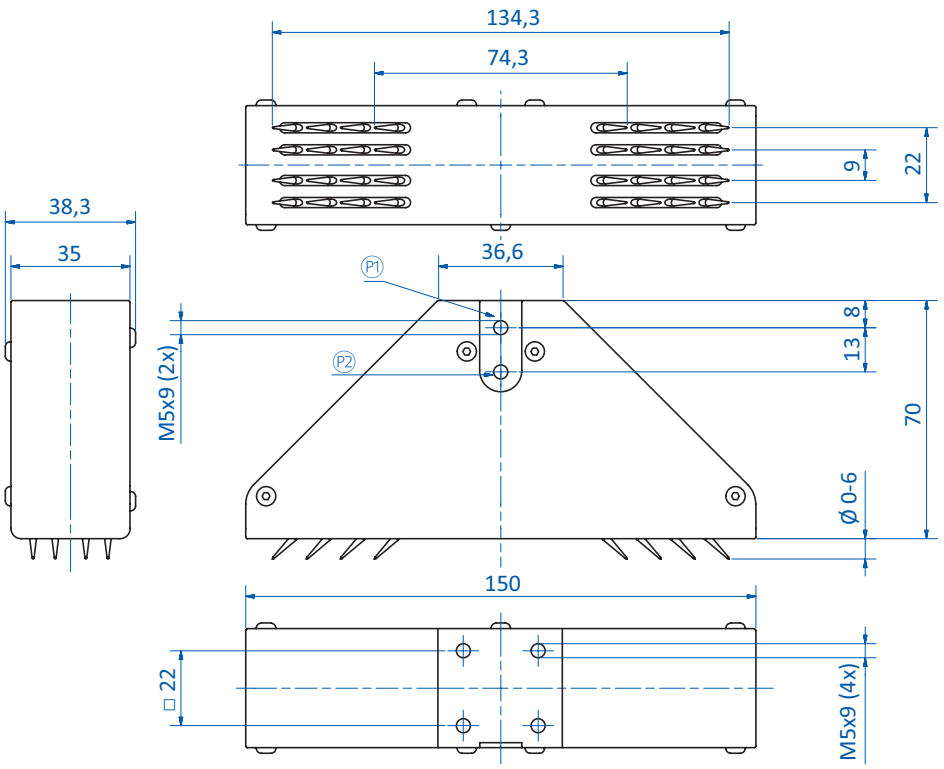

GR04.725-60

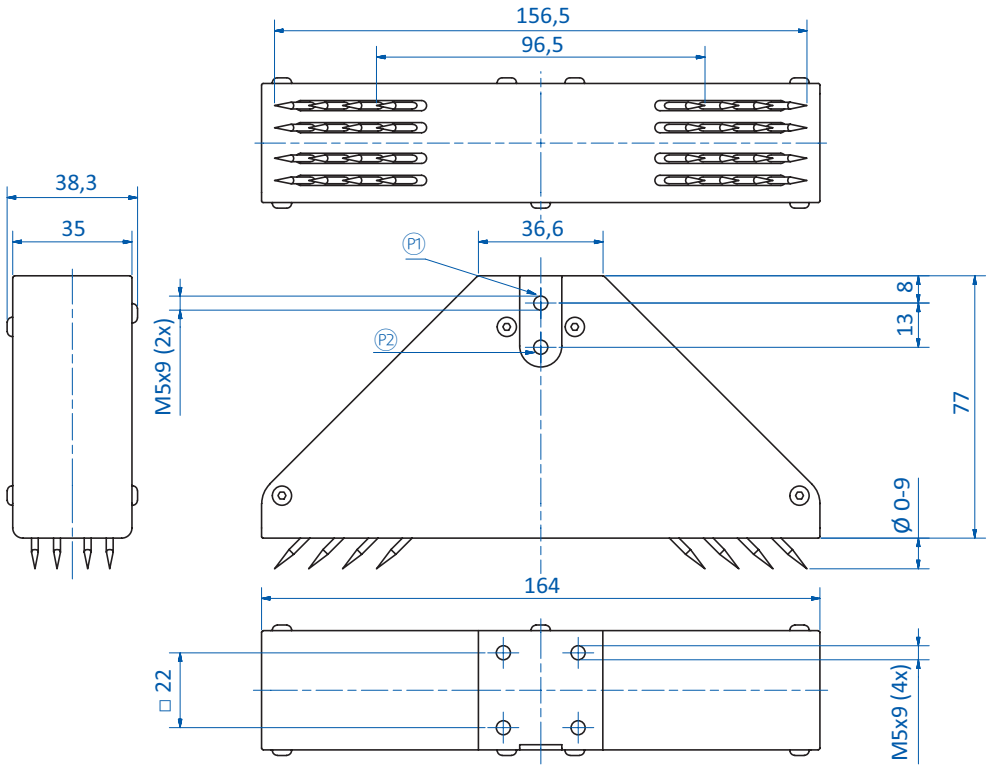

GR04.725-90

Ⓟ1 = Compressed air connection M5 needles extended Ⓟ2 = Compressed air connection M5 needles retracted

info@hidrafluid.es
976 24 32 10

Mounting plates for needle gripper

Product notes

> Mounts needle grippers on the SLine and MLine extrusion systems or spring loaded suction fingers
> Two bore holes for DIN 912-M5, for mounting on extrusion
> Slot nuts and screws included in scope of delivery

Technical data

Item no.	Suitable for	Weight [g]	Suitable suction fingers
GR07.040	GR04.700, GR04.710	21	GR03.090A (p.117), GR03.091A (p.117), GR03.130A, GR03.131A
GR07.041	GR04.725, GR04.730	27	GR03.090A (p.117), GR03.091A (p.117), GR03.130A, GR03.131A

Application examples

Installation example for needle gripper GR04.700 on spring loaded suction finger or FIPA SLine extrusion system

Dimensions

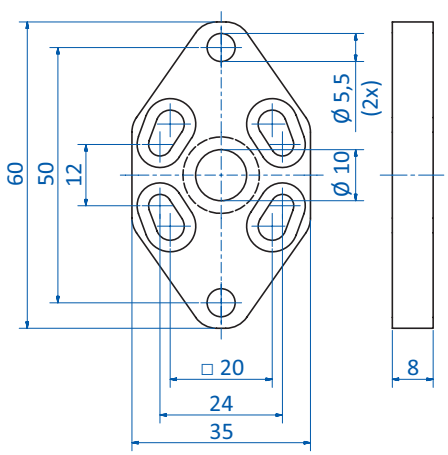

GR07.040

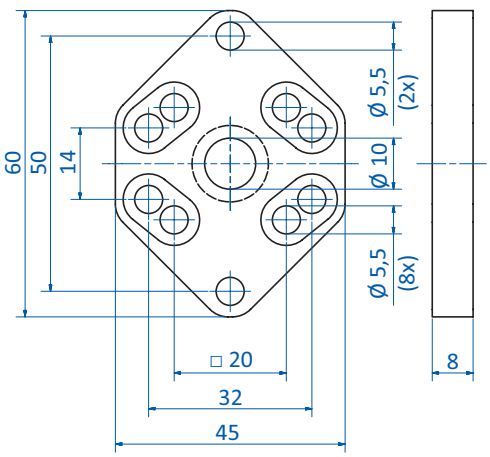

GR07.041

info@hidrafluid.es
976 24 32 10

Mounting bracket for needle gripper GR04.715

Product notes

> Mounted needle gripper on the SLine and MLine extrusion systems or on spring loaded suction finger
> Two bore holes for DIN 912-M5, for mounting on extrusion with slot nuts
> Slot nuts and screws included in scope of delivery

Technical data

Item no.	Weight [g]	Suitable suction fingers
GR07.042	11	GR03.090A (p.117) GR03.091A (p.117) GR03.130A GR03.131A

Dimensions

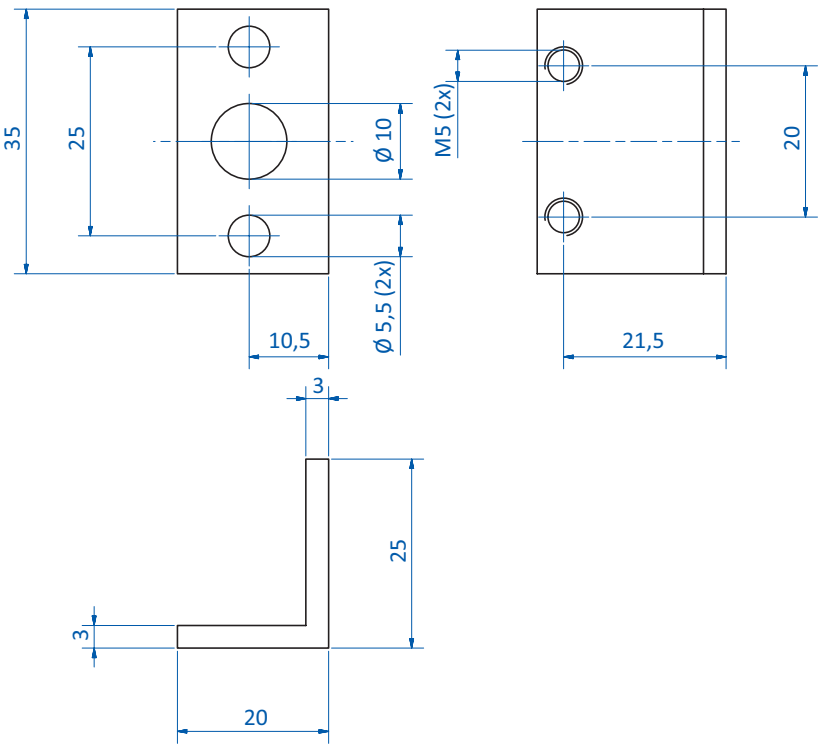

info@hidrafluid.es
976 24 32 10

Magnetic grippers – electrical controlled

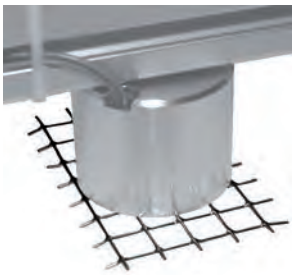

Product notes

> Safe handling of sheet metal or ferromagnetic workpieces with or without recesses
> Very high holding force thanks to high-performance permanent magnet
> Safe holding of the workpiece during power failures
> NC normally closed
> Short cycle times for thin and/or alloyed metal sheets thanks to negligible residual magnetism after switching off the magnetic force
> No compressed air required
> Very energy-efficient as a short electrical pulse is only required for product release
> Robust design
> Indicated holding forces are valid for direct placement, without air gap, on the flat holding surface

Technical data

Item no.	MG35	MG55	MG70
Principle of operation	Electrical	Electrical	Electrical
Rated power [W]	4.6	9	13.3
Gripping force [N]	160	420	720
Residual gripping force [N]	< 1	< 1	< 1
Operating voltage of the switch-off coil [V]	24	24	24
Power-on time [ED]	25 % ED at < 2 min.	25 % ED at < 2 min.	25 % ED at < 2 min.
Min. recommended sheet thickness [mm]	3	4.5	6
Protection class	IP65	IP65	IP65
Max. operating temperature [°C (°F)]	0 - 70 (32 - 158)	0 - 70 (32 - 158)	0 - 70 (32 - 158)
Weight [g]	200	500	900
Suitable fittings	270.448	270.449	270.450

Dimensions

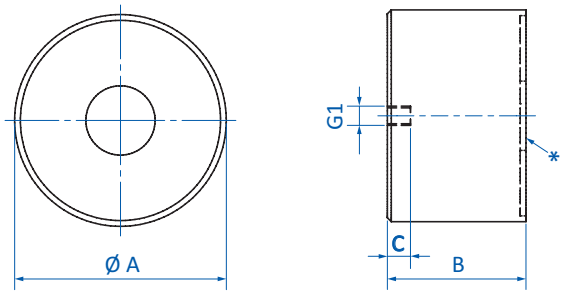

* = Holding surface

Item no.	MG35	MG55	MG70
G1	M4	M5	M8
Ø A [mm]	35	55	70
B [mm]	30	36	45
C [mm]	5	6	8

info@hidrafluid.es
976 24 32 10

Bernoulli vacuum cups SX-B

Housing made of anodized aluminum

Product notes

> Integrated vacuum generation on the Bernoulli principle
> Non-contact, deformation-resistant transport of thin and sensitive products
> Suitable for porous products thanks to high volume flow at low vacuum level
> Easy to install, system flexibly expandable through lateral compressed air inlets
> Long life cycle due to maintenance-free operation
> Only operate with unoiled, dry compressed air
> With 65.530 and 65.540, the pads can be removed for contact-free applications
> Pads are included in scope of delivery

Technical data

Item no.	65.510	65.520	65.530	65.540
Model	SX-B-20	SX-B-30	SX-B-40	SX-B-60
Operating pressure [bar (psi)]	1 - 6 (14.5 - 87)	1 - 6 (14.5 - 87)	1 - 6 (14.5 - 87)	1 - 6 (14.5 - 87)
Holding force at 5 bar (72,5 psi) [N]	2.6	4	6.4	13
Air consumption at 5 bar (72.5 psi) [Nl/min]	95	100	100	150
Max. particle size [µm]	40	40	40	40
Ambient air temperature [°C (°F)]	5 - 60 (41 - 140)	5 - 60 (41 - 140)	5 - 60 (41 - 140)	5 - 60 (41 - 140)
Weight [g]	50	70	120	260
Suitable pads	78.521	78.521	78.522	78.522

FIPA challenge accepted

info@hidrafluid.es
976 24 32 10

Dimensions

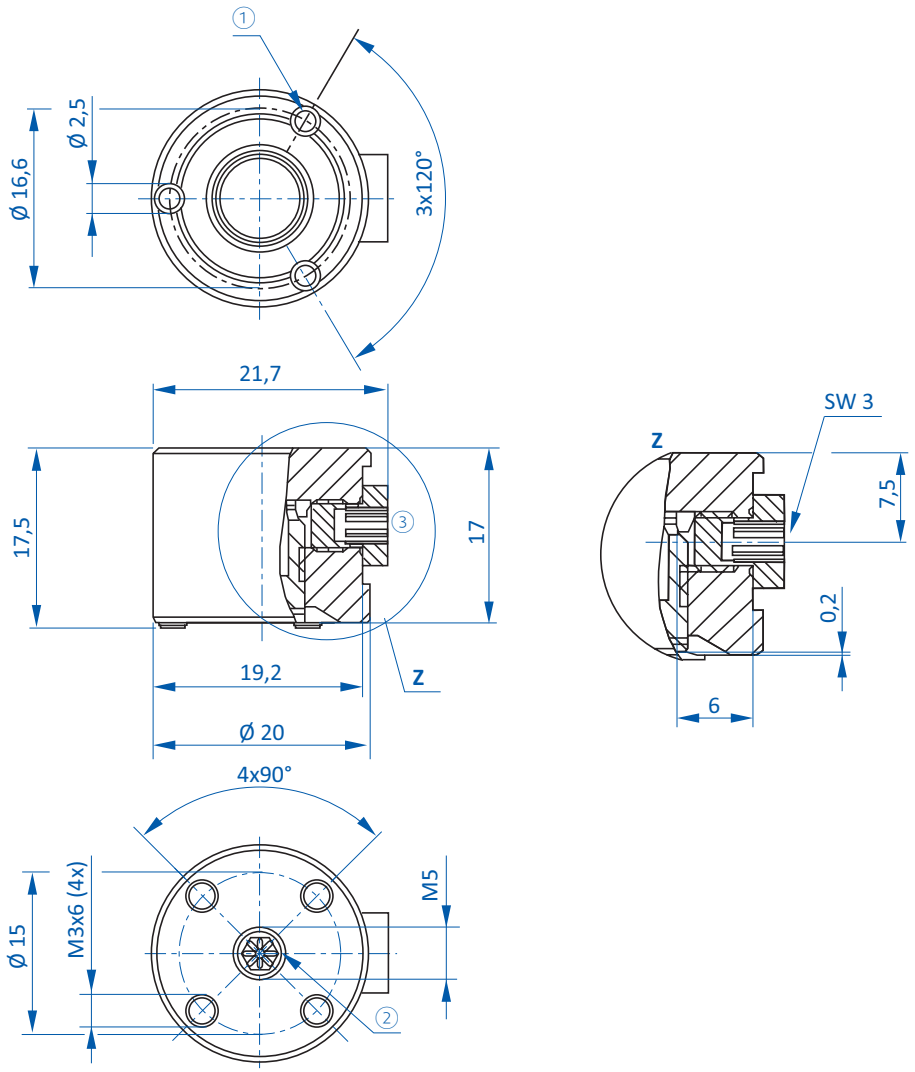

65.510

① = Pads ② = Compressed air connection ③ = Alternative compressed air connection

Continued on the next page

info@hidrafluid.es
976 24 32 10

Dimensions

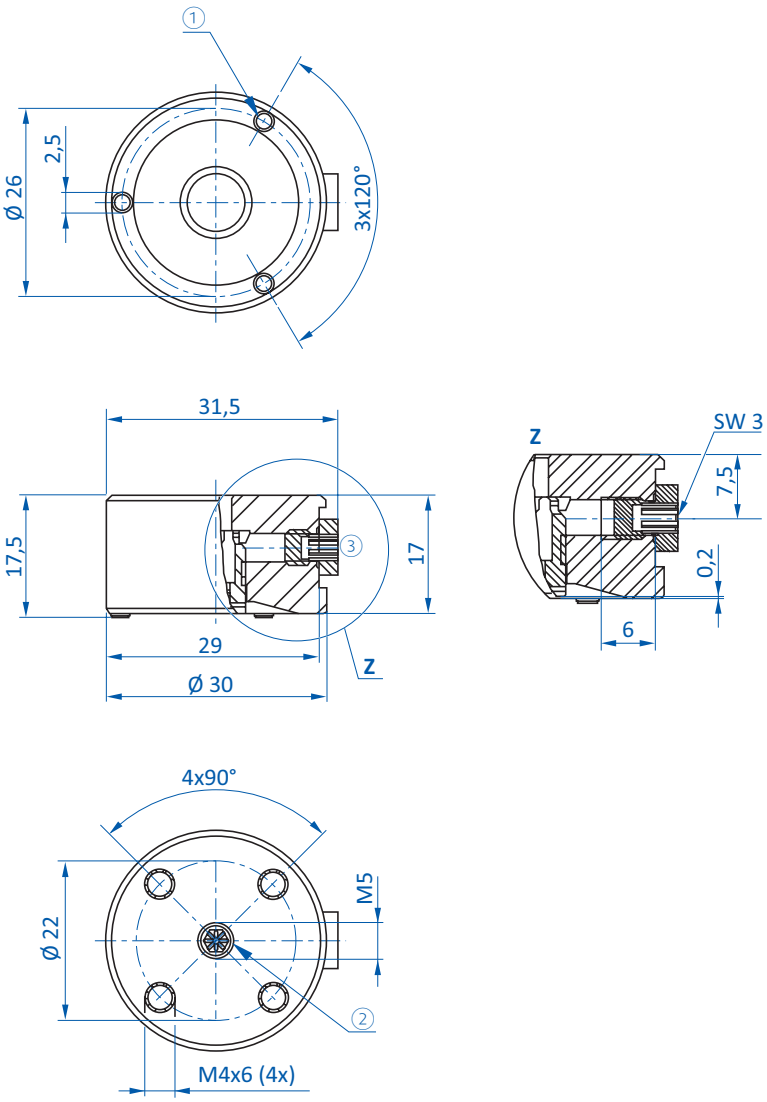

65.520

① = Pads ② = Compressed air connection ③ = Alternative compressed air connection

info@hidrafluid.es
976 24 32 10

Dimensions

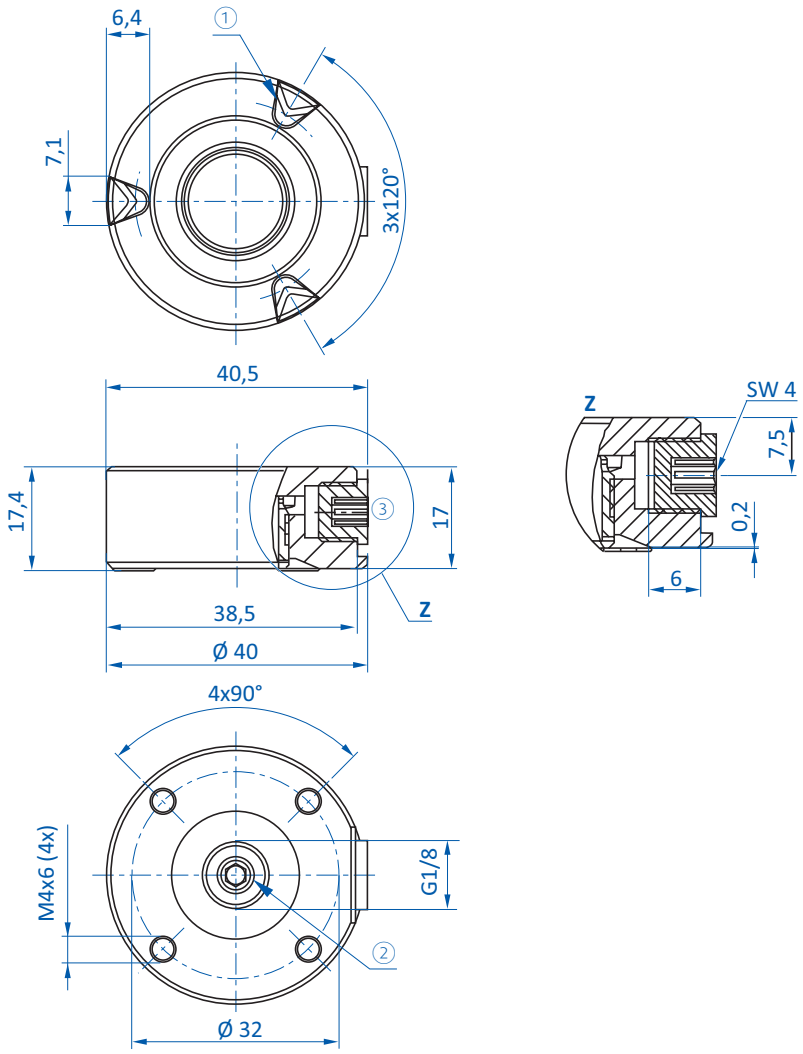

65.530

① = Pads ② = Compressed air connection ③ = Alternative compressed air connection

Continued on the next page

info@hidrafluid.es
976 24 32 10

Dimensions

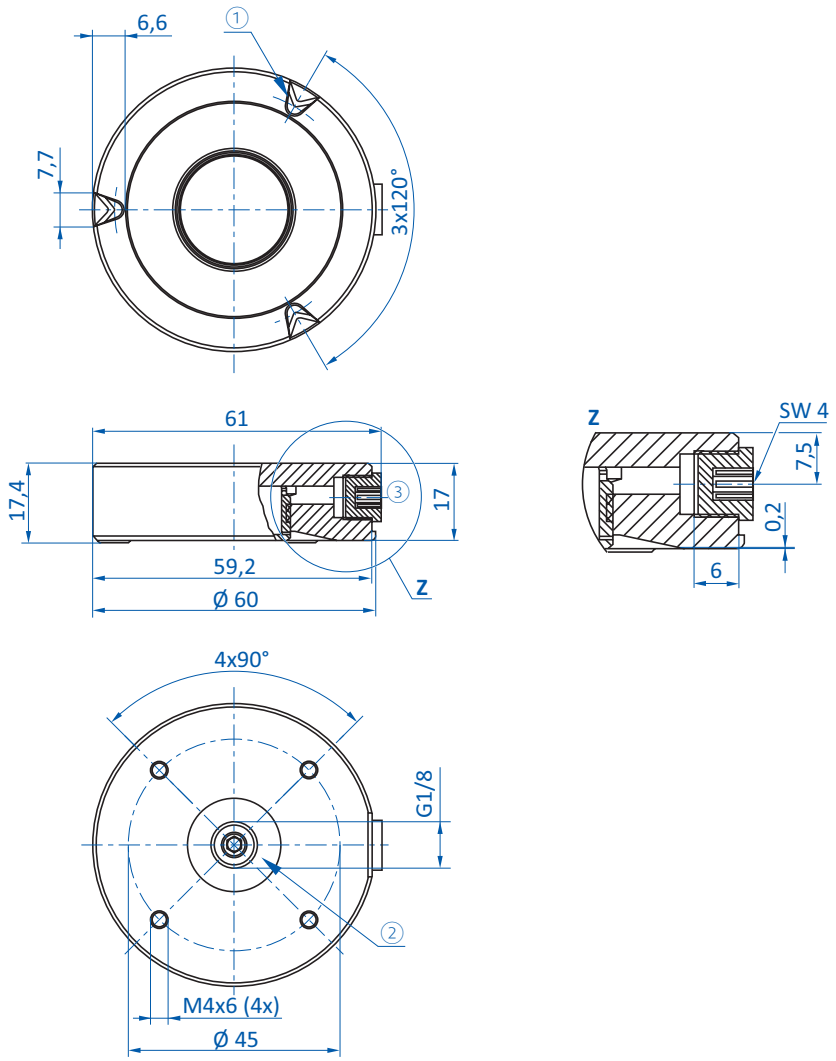

65.540

① = Pads ② = Compressed air connection ③ = Alternative compressed air connection

info@hidrafluid.es
976 24 32 10

Diagrams

> Holding force as a function of operating pressure

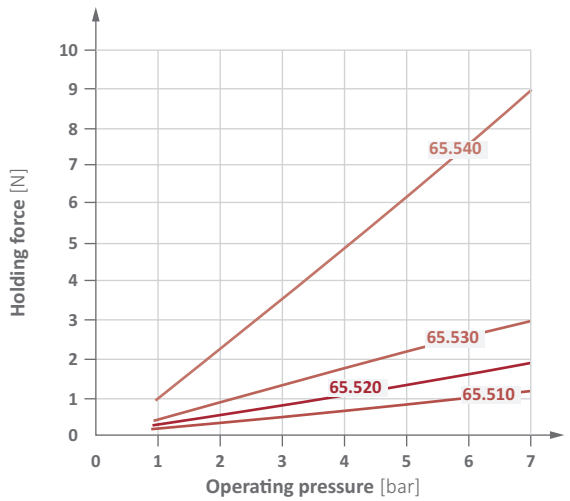

> Air consumption as a function of operating pressure

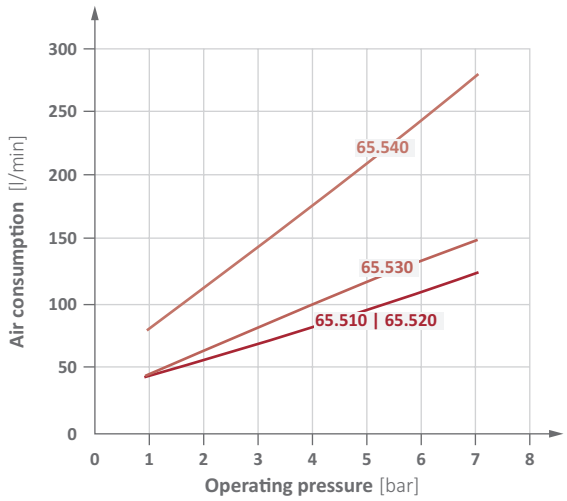

info@hidrafluid.es
976 24 32 10

Bernoulli vacuum cups SX-B-PK

SUITABLE FOR FOODSTUFFS

Body and blind screws made of polyetheretherketone (PEEK), nozzle made of stainless steel

Product notes

> Integrated vacuum generation on the Bernoulli principle
> No ejector, requires compressed air only
> Non-contact, deformation-resistant transport of thin and sensitive products
> Suitable for direct contact with food products (approval by FDA/EC1935/2004)
> Suitable for porous products thanks to high volume flow at low vacuum level
> Easy to install, system flexibly expandable through lateral compressed air inlets
> Long life cycle due to maintenance-free operation
> Only operated with oil-free, dry compressed air

Technical data

Item no.	65.510-PK	65.520-PK	65.530-PK	65.540-PK
Model	SX-B-PK-20	SX-B-PK-30	SX-B-PK-40	SX-B-PK-60
Operating pressure [bar (psi)]	1 - 7 (14.5 - 101.5)	1 - 7 (14.5 - 101.5)	1 - 7 (14.5 - 101.5)	1 - 7 (14.5 - 101.5)
Holding force at 5 bar (72,5 psi) [N]	2.5	3	5.5	12
Air consumption at 5 bar (72.5 psi) [Nl/min]	150	150	150	220
Max. particle size [µm]	40	40	40	40
Medium	Compressed air	Compressed air	Compressed air	Compressed air
Ambient air temperature [°C (°F)]	5 - 60 (41 - 140)	5 - 60 (41 - 140)	5 - 60 (41 - 140)	5 - 60 (41 - 140)
Weight [g]	10	20	30	70
Suitable silicone pads	78.510	78.510	78.512	78.512

Technical specifications

> Highly resistant against diverse chemicals used in the food industry
> Suitable for all conventional CIP (cleaning-in-place) and SIP (sterilization-in-place) processes
> Hygienic product design enables quick and easy cleaning
> Materials:
- Housing: polyetheretherketone
- Pad: silicone
- Nozzle: stainless steel
- Seals: fluorocaoutchouc
- Blanking screw: polyetheretherketone

FIPA challenge accepted

info@hidrafluid.es
976 24 32 10

Dimensions

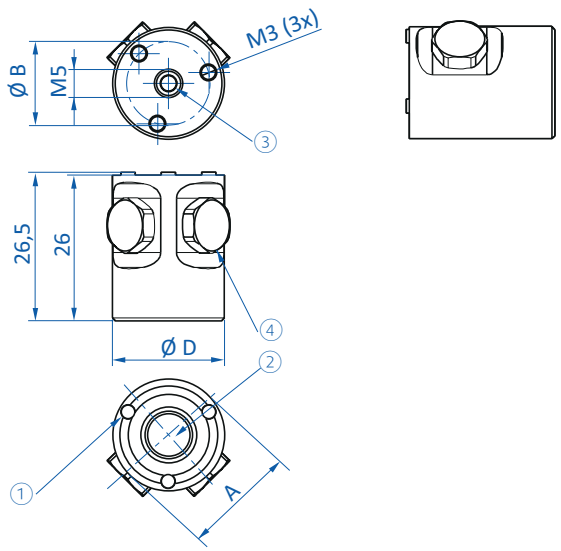

65.510-PK

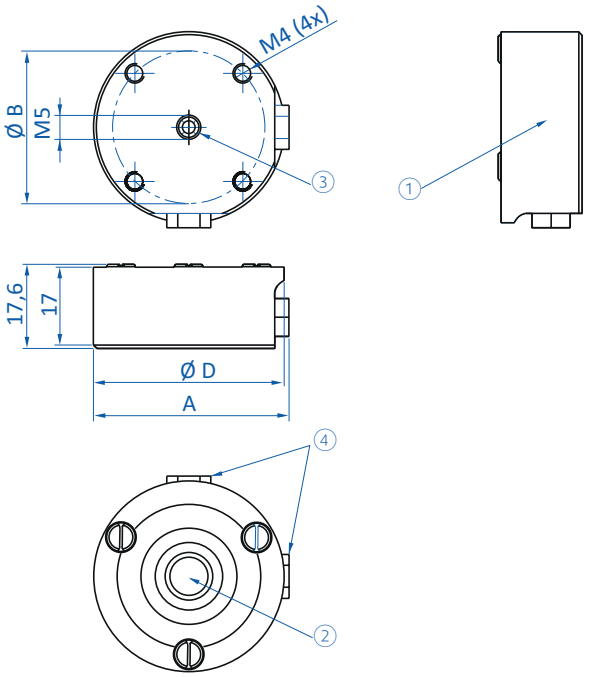

65.520-PK | 65.530-PK | 65.540-PK

① = Silicone rubber pads ② = Nozzle ③ = Compressed air connection ④ = Alternative compressed air connection

Item no.	65.510-PK	65.520-PK	65.530-PK	65.540-PK
A [mm]	21	31	41	61
Ø B [mm]	15	22	32	45
Ø D [mm]	20	30	40	60

Diagrams

> Holding force as a function of operating pressure

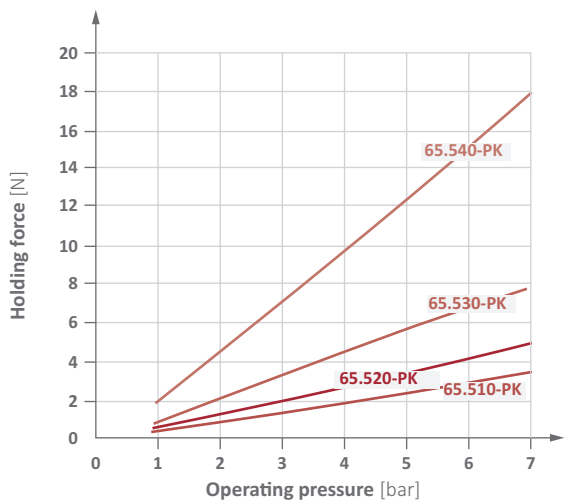

> Air consumption as a function of operating pressure

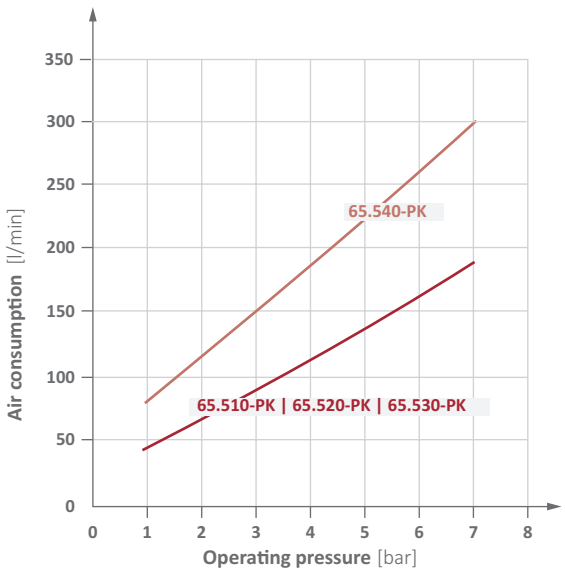

info@hidrafluid.es
976 24 32 10

PA grippers

SUITABLE FOR FOODSTUFFS

Customized design example

Product notes

> Grippers are customized to the workpiece
> Connection to robots such as Delta Robots
> Double-acting
> All components made of FDA compliant material
> Material: polyamide-based high-performance plastic
> The product examples displayed are based on customer specifications
> We would be pleased to develop your customized solution

Dimensions

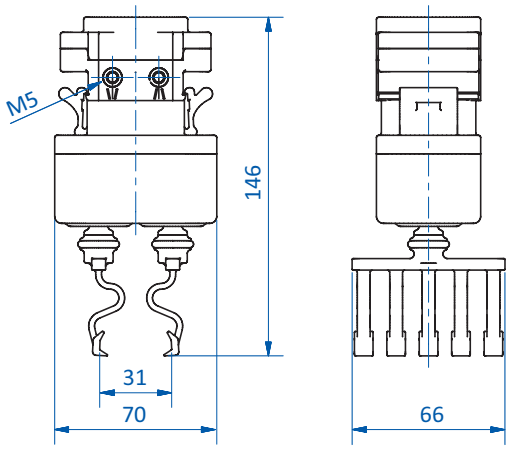

Application examples

> Modular gripper for cans – the gripper design follows the contours of the handling item, to enable rapid acceleration

> Modular gripper with integrated ejector EMM and Varioflex® bellows vacuum cups for height compensation

info@hidrafluid.es
976 24 32 10

Air nippers at a glance 281

Selection blade shapes 282

Air nippers – manual and automatic operation 286

Air nippers – stationary 308

Air shears 321

Accessories 325

info@hidrafluid.es
976 24 32 10

Notes:

FIPA challenge accepted

info@hidrafluid.es
976 24 32 10

FIPA Air nippers

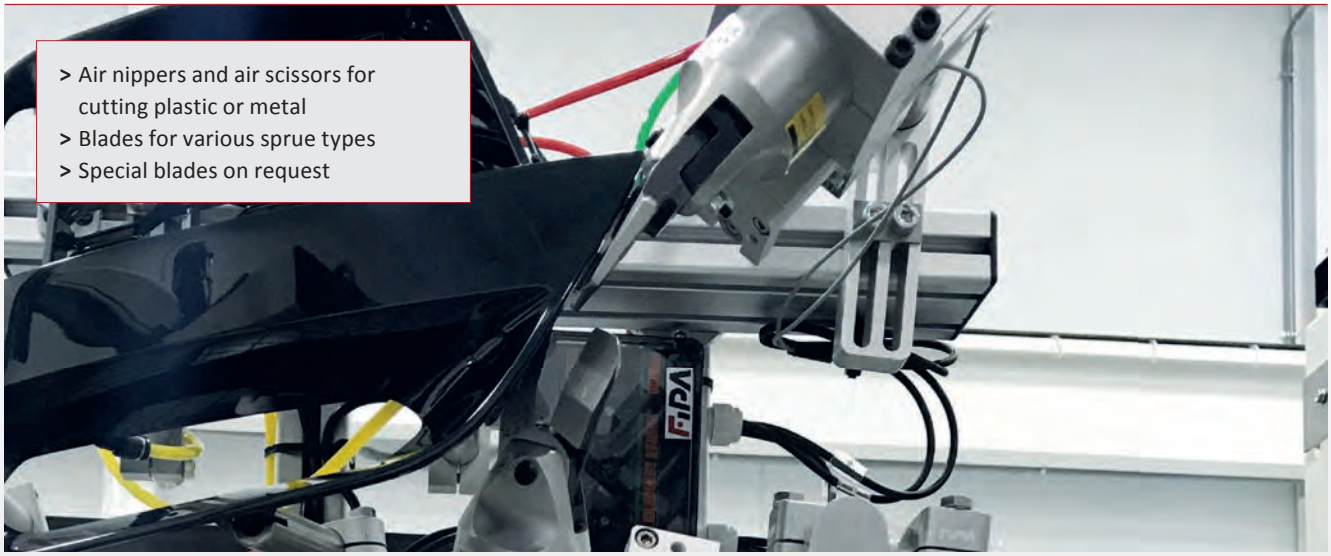

> Air nippers and air scissors for cutting plastic or metal
> Blades for various sprue types
> Special blades on request

Air nippers for manual or automatic operation

> Installation on robot arms or cutting stations
> Cutting off sprues as well as cutting metal wire
> Round or square body

> See page 286

Stationary air nippers with/without lift

> Installation on cutting stations or automated equipment
> Adjustable lift for cutting flush to the workpiece
> Double-acting models for short cycles

> See page 308

Air shears for manual or automatic operation

> Cutting of special plastics and textiles
> Double-acting models for short cycles

> See page 321

Blades for plastic or metal

> Blades for various sprue types
> Special blades on request

> See pages after respective nipper type

info@hidrafluid.es
976 24 32 10

Blades for plastic – nippers for manual and automatic operation

Item number	Page	Cutting capacity [mm]		Air nippers		
		PP/PE	ABS	GT-N [manually]	GT-NR [round]	GT-NS [rectangular]
Straight cutting edge	**Standard type**					
N3AJ	296	2	--	x	x	x
N10LAB2		4	2.6	x	x	x
N20AJ		7	5	x	x	x
N20AB39		7	5	x	--	x
N30AJ		10	6.5	x	x	x
	Extra long blade					
N20AJL	296	7	5	x	x	x
N30AJL		10	6.5	x	x	x
N50AJL		15	8	x	x	x
Angled cutting edge	**Blade with flat angle**					
N3AP	298	2	--	x	x	x
N5AP		2	--	x	x	x
N7AP		3	2	x	x	x
N10AP		4	2.6	x	--	--
N10LAB152		4	2.6	x	--	x
N10LAP		4	2.6	--	x	x
N12AP		4.5	4	x	--	--
N20AA239		6	4	x	--	x
N20AA27		6.5	4.5	x	--	x
N20AB360		7	5	--	--	x
N30AA114		10	6.5	x	x	x
N30AP		10	6.5	x	x	x
N50AB		15	8	--	x	x
N50ABH41		18	8	--	x	x
	Blade with deep angle					
N7PF	298	3	2	x	x	x
N10LPF		4	2.6	--	x	x
N20PF		7	5	x	x	x
N30PF		10	6.5	x	x	x
Laterally facing blades	**Blade with 90° laterally facing cutting edge**					
N20AML	300	10x1.5	8x1	x	x	x
N20AMR		10x1.5	8x1	x	x	x
N30AML		15x2	10x1.5	x	x	x
N30AMR		15x2	10x1.5	x	x	x
Blades, L-shape	**Long blade with 90° angle**					
N20AL	301	7	5	x	x	x
N30AL525		10	6.5	x	x	x

FIPA challenge accepted

info@hidrafluid.es
976 24 32 10

Blades for plastic – nippers for manual and automatic operation

Item number	Page	Cutting capacity [mm]		Air nippers		
		PP/PE	ABS	GT-N [manually]	GT-NR [round]	GT-NS [rectangular]
Blades, Z-shape						
Offset blade						
N20AH	302	7	5	x	x	x
N30AH		10	6.5	x	x	x
Blades, nipper style						
For cutting applications						
N3AE	303	2	--	x	x	x
N5AE		2	--	x	x	x
N7AE		3	2	x	x	x
N10AE		4	2.6	x	x	x
N20AE		7	5	x	x	x
N30AE		10	6.5	x	x	x
N50AE		12	6.5	x	x	--

Blades for metal – nippers for manual and automatic operation

Item number	Page	Cutting capacity [mm]			Air nippers		
		Copper wire	Steel wire	Piano wire	GT-N [manually]	GT-NR [round]	GT-NS [rectangular]
Straight cutting edge							
Blade with an unbeveled edge (anvil principle) to cut thin wire							
N3BJ	304	1	0.5	--	x	x	x
N5BJ		1	0.5	--	x	x	x
N7BJ		1.6	1	--	x	x	x
Blade in clipper type shape with carbide tips to cut thicker wire or thin pipe							
N20BFB	304	2.6	2	1.2	x	x	x
N50AS		5.5	4.5	--	x	x	--
Angled cutting edge							
Blade with an unbeveled edge (anvil principle) to cut thin wire							
N3AS	306	1	0.5	--	x	x	x
N3HS		1	0.5	0.2	x	x	x
N5AS		1	0.5	--	x	x	x
N5HS		1	0.5	0.3	x	x	x
N7AS		1.6	1	--	x	x	x
N7HS		1.6	1	0.5	x	x	x
N10AS		1.8	1.2	--	x	--	--
N10HS		2.3	1.7	--	x	--	--
N10LAS		1.8	1.2	--	--	x	x
N12AS		2.3	1.7	--	x	--	--
N12HS		1.3	2.7	--	x	--	--
N20AS		2.6	2	--	x	x	x
N20HS		2.6	2	1	x	x	x
N30AS		3.3	2.8	--	x	x	x
Blade with an unbeveled edge (anvil principle) and carbide tips							
N30BBB	306	3.3	2.8	1.2	x	x	x
Blade with carbide tips							
N50BBB	306	5.5	4.5	2	x	x	--

info@hidrafluid.es
976 24 32 10

Blades for plastic – stationary nippers with or without lift

Item number	Page	Cutting capacity [mm]		Air nippers	
		PP/PE	ABS	GT-NF [without lift]	GT-NY [with lift]
Straight cutting edge					
Standard type					
NY05AJ	311	3	2	x	x
NY10AJ		3.5	2.3	x	x
NY15AJ		4	2.6	x	x
NY20AJ		5	3.4	x	x
Reverse cutting edge if cutting flush to workpiece with blade "AJ" is not possible					
NY05RAJ	311	3	2	x	x
NY10RAJ		3.5	2.3	x	x
NY15RAJ		4	2.6	x	x
NY25RAJ		5	3.4	x	x
Extra long blade					
NY05AJL	311	3	2	x	x
NY10AJL		3.5	2.3	x	x
NY15AJL		4	2.6	x	x
NY25AJL		5	3.4	x	x
Extra thin blade for restricted spaces					
NY05AJT	311	3	2	x	x
NY10AJT		3.5	2.3	x	x
NY15AJT		4	2.6	x	x
Soldered carbide tip for cutting hard plastics or plastics containing fiberglass					
NY05AJB	311	3	2	x	x
NY10AJB		3.5	2.3	x	x
NY15AJB		4	2.6	x	x
NY25AJB		5	3.4	x	x
Blades, Z-shape					
Offset blade for overcoming obstacles or for narrow sprues					
NY05AH	313	3	2	x	x
NY10AH		3.5	2.3	x	x
NY15AH		4	2.6	x	x
NY25AH		5	3.4	x	x
Reverse cutting edge if cutting flush to workpiece with blade "AH" is not possible					
NY05RAH	313	3	2	x	x
NY10RAH		3.5	2.3	x	x
NY15RAH		4	2.6	x	x
NY25RAH		5	3.4	x	x

Blades for metal – stationary nippers with or without lift

Item number	Page	Cutting capacity [mm]		Air nippers	
		Copper wire	Steel wire	GT-NF [without lift]	GT-NY [with lift]
Straight cutting edge					
Blade with an unbeveled edge (anvil principle)					
NY05BJ	315	1.6	1	x	x
NY05RBJ		1.6	1	x	x

FIPA challenge accepted

info@hidrafluid.es
976 24 32 10

Blades for plastic – vertical stationary nippers with lift

Item number	Page	Cutting capacity [mm] PP/PE	Cutting capacity [mm] ABS	Air nippers GT-NT
Straight cutting edge				
Standard type				
NT03AJ	318	1.5	1	x
NE05AJ		2.5	1.5	x
NT05AJ		2.5	1.5	x
NE10AJ		3.5	2.3	x
NT10AJ		3.5	2.3	x
NT20AJ		5	3.4	x
Extra long blade				
NT05AJL	318	2.5	1.5	x
NT10AJL		3.5	2.3	x
NT20AJL		5	3.4	x
Extra thin blade for restricted spaces				
NT03AJT	318	1.5	1	x
NT05AJT		2.5	1.5	x
NT10AJT		3.5	2.3	x
Blade with HSS-tip for cutting hard plastic				
NT05AJH	318	2.5	1.5	x
NT10AJH		3.5	2.3	x
NT20AJH		5	3.4	x
Carbide tip for cutting hard plastic or plastic with glass fiber				
NT05AJB	318	2.5	1.5	x
NT10AJB		3.5	2.3	x
NT20AJB		5	3.4	x
Blades, pliers shape				
For universal cutting applications				
NT05AE	320	2.5	1.5	x
NT10AE		3.5	2.3	x

Blades for air scissors

Item number	Page	Cutting capacity [mm] Kevlar	Cutting capacity [mm] Band steel	Air nippers GT-NWR [round]	Air nippers GT-NWS [rectangular]
Blades for single-acting air scissors for cutting kevlar, aramid, glass or carbon fiber					
H30ME	322	1	--	x	x
H30MEL		1	--	x	x
H12ME30K		0.3	--	x	--
H120SK		--	15 x 0.5	x	--

Item number	Page	Cutting capacity [mm] Copper wire	Cutting capacity [mm] Steel wire	Air nippers GT-HWR [round]	Air nippers GT-HWS [rectangular]
Blades for double-acting air scissors for cutting copper or steel wire					
HW1J	324	1	0.5	x	x
HW10J		1.8	1.2	--	x

info@hidrafluid.es
976 24 32 10

Air nippers – automatic, round/square

AIR NIPPERS FOR PLASTIC AND METAL

Air nippers, round

Air nippers, square

Product notes

> Air nippers for EOAT robot arms or cutting stations
> Round body can be mounted in any angle position
> Square body comes with bore holes on five surfaces
> Rear air connection can be rotated 180°
> GT-NS20H-1: air nipper with adjustable cutting opening
> Pressure booster to increase cutting force optionally available

Technical data

Item no.	Housing	Max. cutting force [N]	Air consumption [cm³/stroke]	Operating pressure [bar (psi)]	Height blade [mm]	Connection [G]	Accessories
GT-NR3	Round	294	45	4 - 5 (58 - 72.5)	7	G1/8	--
GT-NR5	Round	392	64	4 - 5 (58 - 72.5)	7	G1/8	--
GT-NR7	Round	490	116	4 - 5 (58 - 72.5)	9	G1/8	--
GT-NR10L	Round	588	116	4 - 6 (58 - 87)	12	G1/8	Mounting bracket: GT-NR10H (p.325) Mounting bracket: GT-NR10GR (p.328) Mounting bracket: GT-NR10S (p.326) Mounting bracket: GT-NR10ST2 (p.327) Pressure amplifier: P-10L (p.295)
GT-NR20	Round	1,372	230	5 - 6 (72.5 - 87)	12	G1/8	Mounting bracket: GT-NR20H (p.325) Mounting bracket: GT-NR20S (p.326) Mounting bracket: GT-NR20ST2 (p.327) Pressure amplifier: P-20 (p.295)
GT-NR30	Round	2,744	584	5 - 6 (72.5 - 87)	17	G1/8	Mounting bracket: GT-NR30H (p.325) Mounting bracket: GT-NR30S (p.326) Mounting bracket: GT-NR30ST2 (p.327) Pressure amplifier: P-30 (p.295)
GT-NR50	Round	4,704	1,170	5 - 6 (72.5 - 87)	25.2	G1/4	Mounting bracket: GT-NR50H (p.325) Mounting bracket: GT-NR50ST2 (p.327) Pressure amplifier: P-50 (p.295)
GT-NS3	Square	294	45	4 - 5 (58 - 72.5)	7	G1/8	--
GT-NS5	Square	392	64	4 - 5 (58 - 72.5)	7	G1/8	--
GT-NS7	Square	490	116	4 - 5 (58 - 72.5)	9	G1/8	--
GT-NS10L	Square	588	116	4 - 6 (58 - 87)	12	G1/8	Pressure amplifier: P-10L (p.295)
GT-NS20	Square	1,372	230	5 - 6 (72.5 - 87)	12	G1/8	Pressure amplifier: P-20 (p.295)
GT-NS20H-1	Square	1,372	230	5 - 6 (72.5 - 87)	12	G1/8	Pressure amplifier: P-20 (p.295)
GT-NS30	Square	2,744	584	5 - 6 (72.5 - 87)	17	G1/8	Pressure amplifier: P-30 (p.295)

FIPA challenge accepted

info@hidrafluid.es
976 24 32 10

Application example

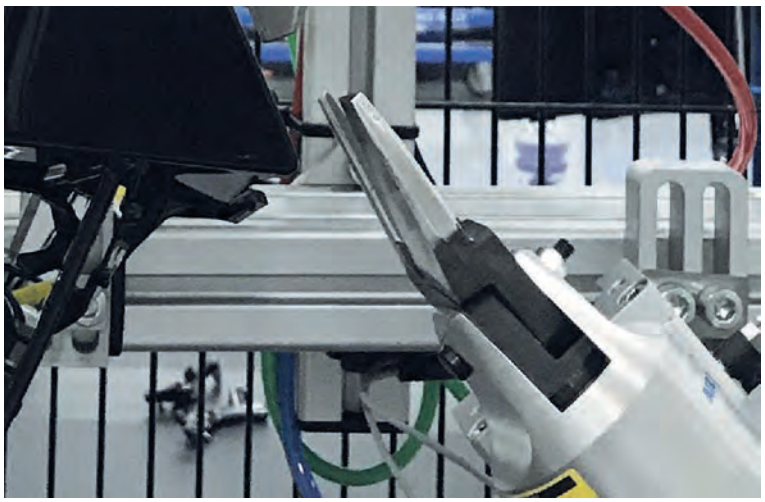

Dimensions

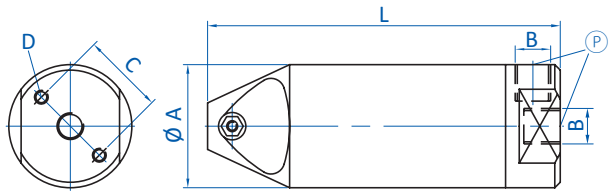

GT-NR3 | GT-NR5 | GT-NR7 | GT-NR10L | GT-NR20 | GT-NR30 | GT-NR50

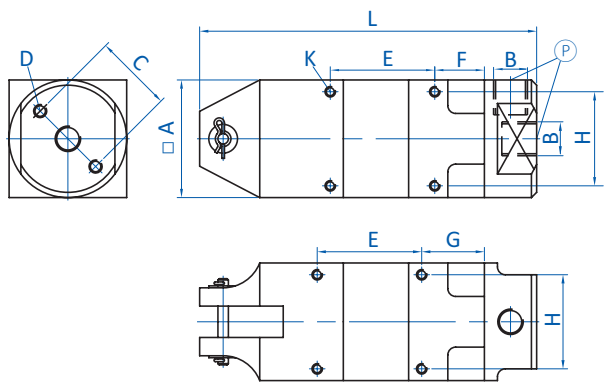

GT-NS3 | GT-NS5 | GT-NS7 | GT-NS10L | GT-NS20 | GT-NS20H-1 | GT-NS30

Ⓟ = Compressed air connection

Item no.	A [mm]	B	C [mm]	D	E [mm]	F [mm]	G [mm]	H [mm]	K	L [mm]
GT-NR3	23	G1/8	17	M3	--	--	--	--	--	110
GT-NR5	30	G1/8	20	M4	--	--	--	--	--	94
GT-NR7	34	G1/8	22	M4	--	--	--	--	--	113
GT-NR10L	36	G1/8	24	M4	--	--	--	--	--	113
GT-NR20	45	G1/8	30	M5	--	--	--	--	--	129
GT-NR30	56	G1/8	40	M6	--	--	--	--	--	165
GT-NR50	75	G1/4	50	M8	--	--	--	--	--	222
GT-NS3	23	G1/8	17	M3x8	40	19	24	19	M3x3.5	110
GT-NS5	30	G1/8	20	M4x10	30	14	19	24	M3x5	94
GT-NS7	36	G1/8	24	M4x10	30	18	23	28	M4x5.5	113
GT-NS10L	36	G1/8	24	M4x10	30	18	23	28	M4x5.5	113
GT-NS20	45	G1/8	30	M5x12	40	19	24	36	M4x7	129
GT-NS20H-1	45	G1/8	30	M5x12	40	19	24	36	M4x7	129
GT-NS30	56	G1/8	40	M6x12	60	20	30	46	M5x10	170

info@hidrafluid.es
976 24 32 10

Air nippers for manual operation

AIR NIPPERS FOR PLASTIC AND METAL

Product notes

> Manually operated air nippers with safety lever
> Round shaped body with knurling for safe grip
> GT-N20, N30 and N50 come with stopcock to lock compressed air supply
> Pressure booster to increase cutting force optionally available

Technical data

Item no.	Max. cutting force [N]	Air consumption [cm³/stroke]	Operating pressure [bar (psi)]	Height blade [mm]	Connection [G]	Weight [g]	Pressure amplifier
GT-N3	294	45	4 - 5 (58 - 72.5)	7	G1/4	100	--
GT-N5	392	64	4 - 5 (58 - 72.5)	7	G1/4	140	--
GT-N7	490	116	4 - 5 (58 - 72.5)	9	G1/4	190	--
GT-N10	588	116	4 - 6 (58 - 87)	9	G1/4	200	P-10L (p.295)
GT-N12	735	116	5 - 6 (72.5 - 87)	12	G1/4	220	P-10L (p.295)
GT-N20	1,372	230	5 - 6 (72.5 - 87)	12	G1/4	430	P-20 (p.295)
GT-N30	2,744	584	5 - 6 (72.5 - 87)	17	G1/4	685	P-30 (p.295)
GT-N50	4,704	1,220	5 - 6 (72.5 - 87)	25.2	G1/4	1,220	P-50 (p.295)

Dimensions

Ø A [mm]	L [mm]
23	112
30	103
34	123
34	132
36	132
45	156
56	193
75	237

Dimensions

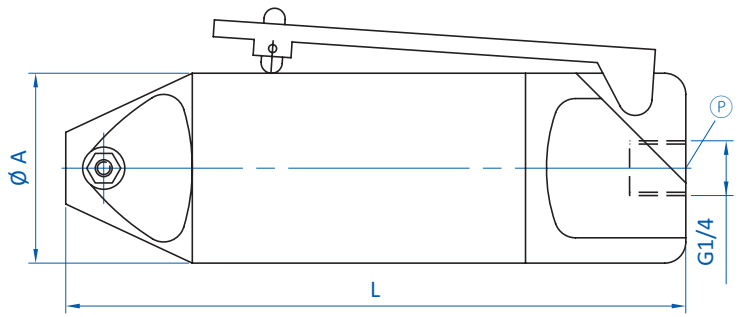

Ⓟ = Compressed air connection

FIPA challenge accepted
info@hidrafluid.es
976 24 32 10

Blades for plastic – Series SF-05

Product notes

> Forged blades from high alloy steel and heat surface treated
> Suitable for all nippers of the size 5

Technical data

Item no.	Plug design	Max. opening width [mm]	Max. sprue diameter [mm]	Material	Weight [g]	Air nippers
SF05.A15.25	15° angle	5	2	Ferrous alloy	34	GT-N5 (p.288) GT-NR5 (p.286) GT-NS5 (p.286)

Dimensions

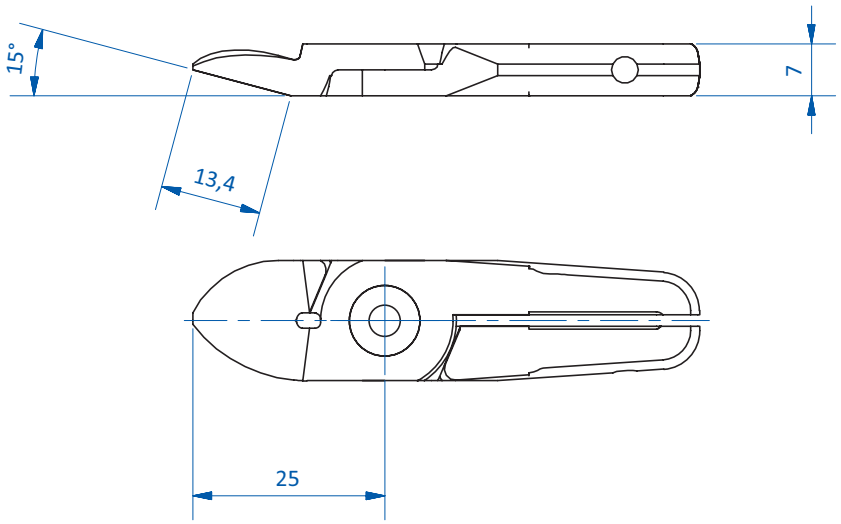

info@hidrafluid.es
976 24 32 10

Blades for plastic – Series SF-10

Product notes

> Forged blades from high alloy steel and heat surface treated
> Suitable for all nippers of the size 10

Technical data

Item no.	Plug design	Max. opening width [mm]	Max. sprue diameter [mm]	Material	Weight [g]	Air nippers
SF10.A15.35	15° angle	4.5	3	Ferrous alloy	110	GT-NR10L (p.286) GT-NS10L (p.286)
SF10.A40.34	40° angle	6.5	4	Ferrous alloy	112	GT-NR10L (p.286) GT-NS10L (p.286)

Dimensions

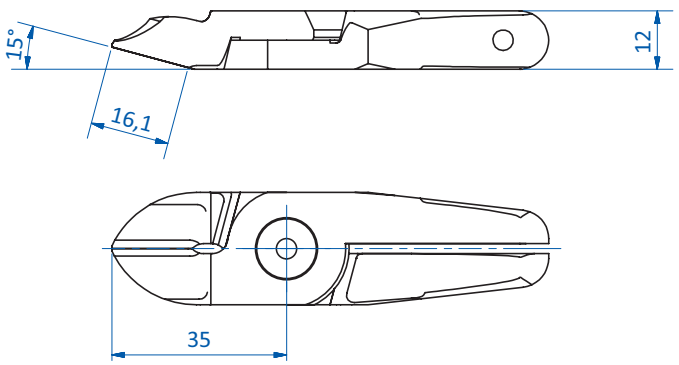

SF10.A15.35

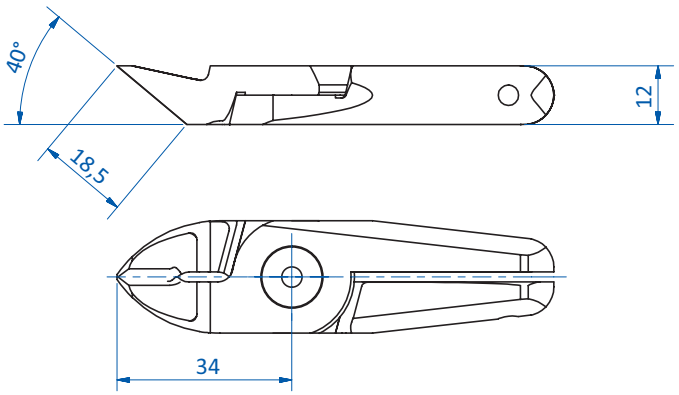

SF10.A40.34

info@hidrafluid.es
976 24 32 10

Blades for plastic – Series SF-20

Product notes

> Forged blades from high alloy steel and heat surface treated
> Suitable for all nippers of the size 20

Technical data

Item no.	Plug design	Max. opening width [mm]	Max. sprue diameter [mm]	Material	Weight [g]	Air nippers
SF20.A40.51	40° angle	17	9	Ferrous alloy	170	GT-N20 (p.288), GT-NR20 (p.286), GT-NS20 (p.286)
SF20.A90.41	90° angle	14	8	Ferrous alloy	200	GT-N20 (p.288), GT-NR20 (p.286), GT-NS20 (p.286)
SF20.I36	Inline	11.5	6	Ferrous alloy	120	GT-N20 (p.288), GT-NR20 (p.286), GT-NS20 (p.286)
SF20.I65	Inline	22	8	Ferrous alloy	198	GT-N20 (p.288), GT-NR20 (p.286), GT-NS20 (p.286)
SF20.P48	Perpendicular	16.5	8	Ferrous alloy	178	GT-N20 (p.288), GT-NR20 (p.286), GT-NS20 (p.286)

Dimensions

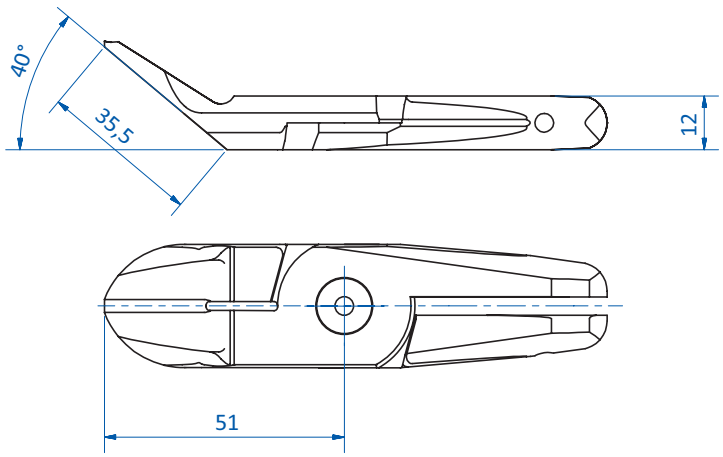

SF20.A40.51

Continued on the next page

info@hidrafluid.es
976 24 32 10

Dimensions

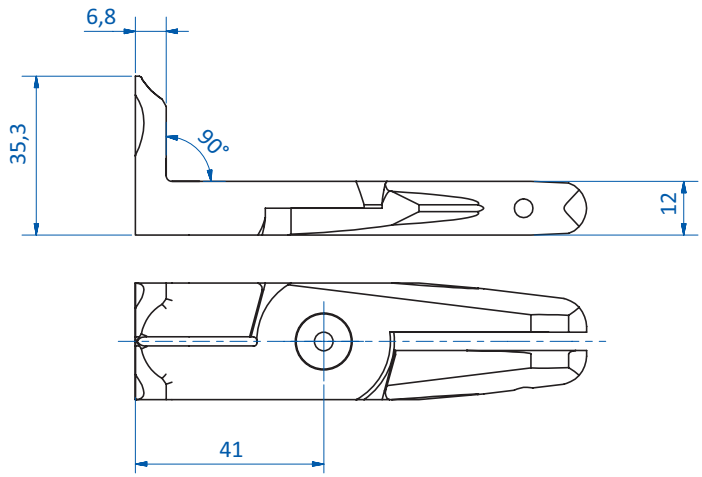

SF20.A90.41

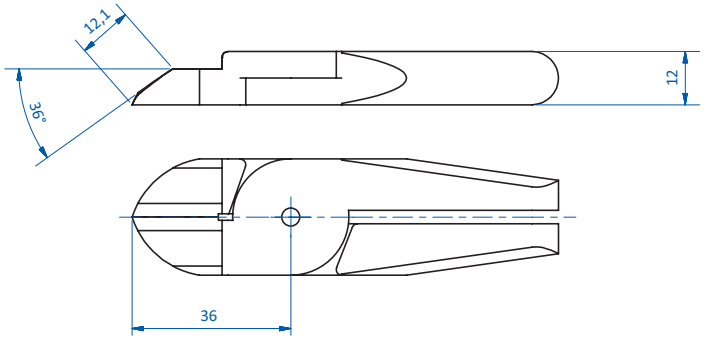

SF20.I36

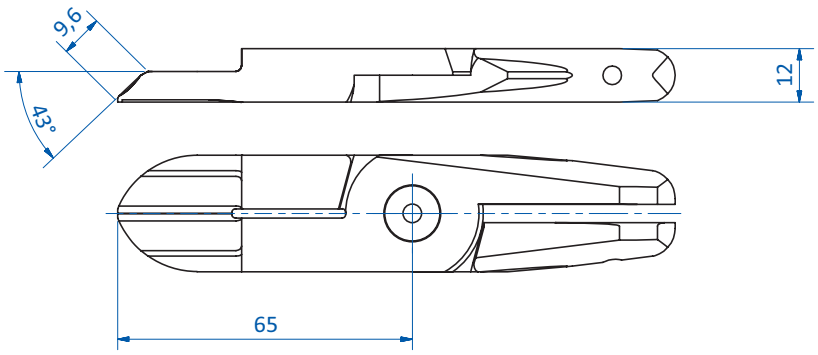

SF20.I65

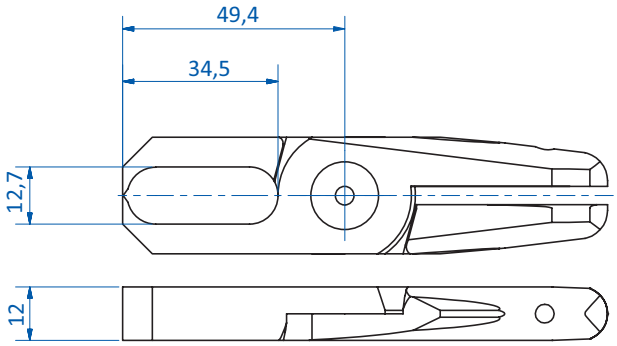

SF20.P48

FIPA challenge accepted
info@hidrafluid.es
976 24 32 10

Blades for plastic – Series SF-30

Product notes

> Forged blades from high alloy steel and heat surface treated
> Suitable for all nippers of the size 30

Technical data

Item no.	Plug design	Max. opening width [mm]	Max. sprue diameter [mm]	Material	Weight [g]	Air nippers
SF30.A30.76	30° angle	18.5	9	Ferrous alloy	378	GT-N30 (p.288) GT-NR30 (p.286) GT-NS30 (p.286)
SF30.I53	Inline	12.5	9	Ferrous alloy	365	GT-N30 (p.288) GT-NR30 (p.286) GT-NS30 (p.286)
SF30.I74	Inline	19	9	Ferrous alloy	464	GT-N30 (p.288) GT-NR30 (p.286) GT-NS30 (p.286)
SF30.P45	Perpendicular	10	9	Ferrous alloy	374	GT-N30 (p.288) GT-NR30 (p.286) GT-NS30 (p.286)

Dimensions

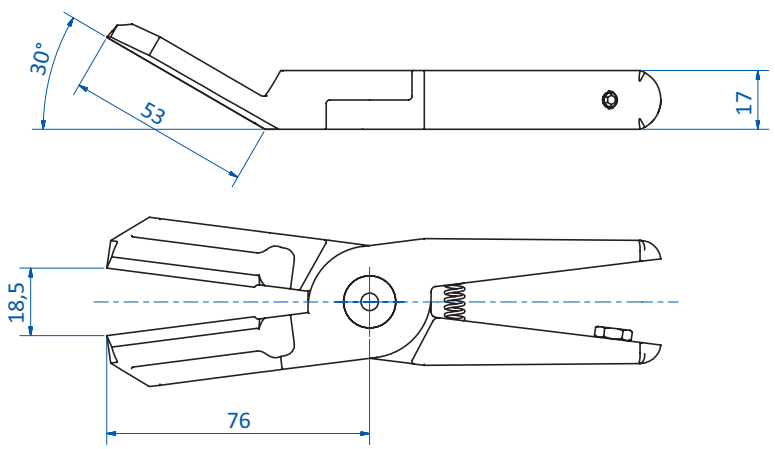

SF30.A30.76

Continued on the next page

info@hidrafluid.es
976 24 32 10

Dimensions

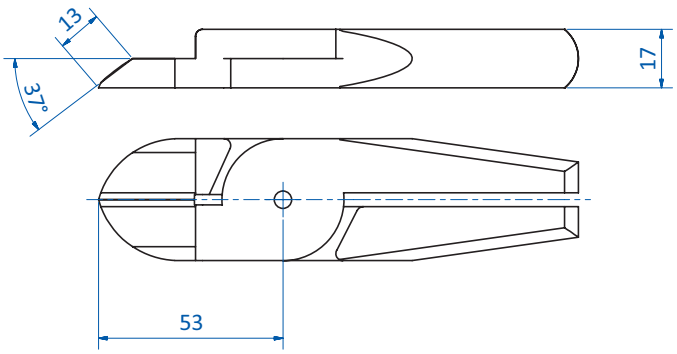

SF30.I53

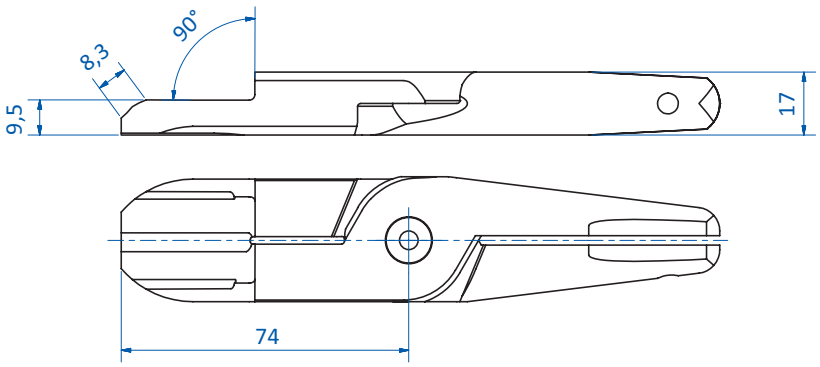

SF30.I74

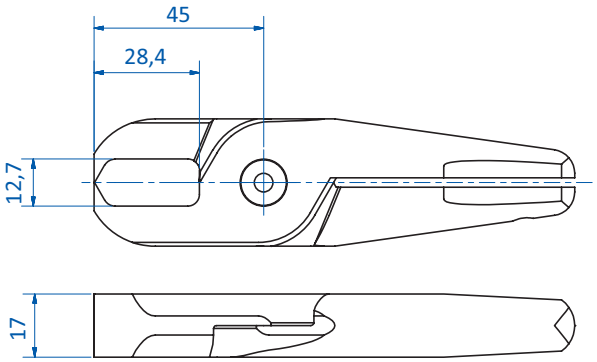

SF30.P45

FIPA challenge accepted
info@hidrafluid.es
976 24 32 10

Pressure booster for air nippers GT-N, GT-NR, GT-NS

Air nippers GT-NS20 with pressure booster

Product notes

> Pressure booster for retrofitting
> Increase in cutting force if the required cutting force cannot be achieved with a standard nipper
> Order example air nipper GT-N20 incl. booster P-20: GT-NP20

Technical data

Item no.	Total cutting force [N]	Air consumption [cm³/stroke]	Weight [g]	Air nippers
P-10L	980	223	110	GT-N10 (p.288) GT-NR10L (p.286) GT-NS10L (p.286) GT-N12 (p.288)
P-20	2,254	508	208	GT-N20 (p.288) GT-NR20 (p.286) GT-NS20 (p.286)
P-30	4,410	956	315	GT-N30 (p.288) GT-NR30 (p.286) GT-NS30 (p.286)
P-50	7,742	2,670	776	GT-N50 (p.288) GT-NR50 (p.286)

Dimensions

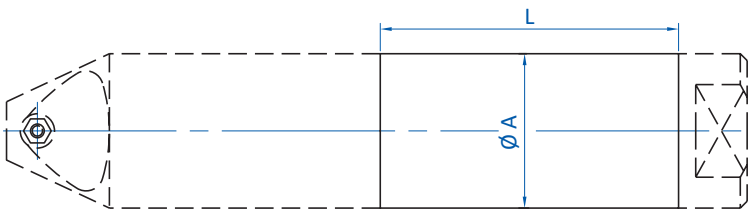

Item no.	Ø A [mm]	L [mm]
P-10L	36	71
P-20	45	87
P-30	56	92
P-50	75	133

info@hidrafluid.es
976 24 32 10

Blades for plastic, straight

Product notes

> Blades with straight cutting edge for clean cuts
> AJ, LAB2 and AB39: standard blade
> AJL: blade extra long

Technical data

Item no.	Material	Max. cutting thickness [mm]		Weight [g]	Air nippers
		PP/PE	ABS		
N3AJ	Ferrous alloy	2	--	40	GT-N3 (p.288) GT-NR3 (p.286) GT-NS3 (p.286)
N10LAB2	Ferrous alloy	4	2.6	120	GT-NR10L (p.286) GT-NS10L (p.286)
N20AJ	Ferrous alloy	7	5	125	GT-N20 (p.288) GT-NS20 (p.286) GT-NR20 (p.286)
N20AB39	Ferrous alloy	7	5	185	GT-N20 (p.288) GT-NS20 (p.286)
N20AJL	Ferrous alloy	7	5	230	GT-N20 (p.288) GT-NR20 (p.286) GT-NS20 (p.286)
N30AJ	Ferrous alloy	10	6.5	370	GT-N30 (p.288) GT-NR30 (p.286) GT-NS30 (p.286)
N30AJL	Ferrous alloy	10	6.5	470	GT-N30 (p.288) GT-NR30 (p.286) GT-NS30 (p.286)
N50AJL	Ferrous alloy	15	8	1,430	GT-N50 (p.288) GT-NR50 (p.286)

FIPA challenge accepted
info@hidrafluid.es
976 24 32 10

Dimensions

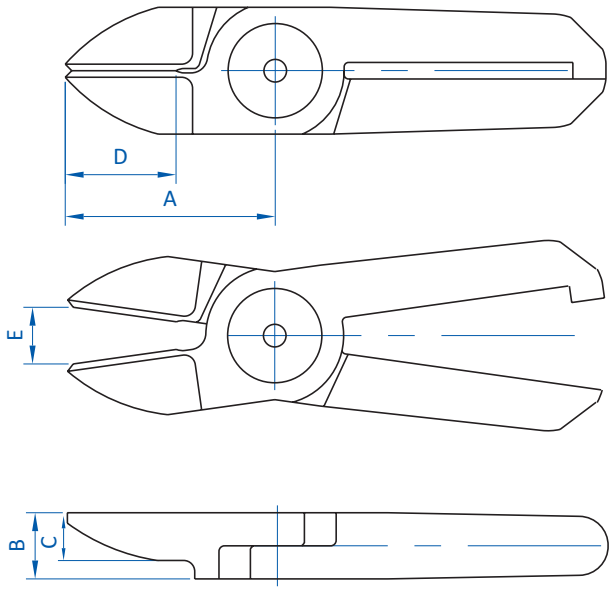

Item no.	**A** [mm]	**B** [mm]	**C** [mm]	**D** [mm]	**E** [mm]
N3AJ	24	7	4	12	5.5
N10LAB2	61	12	7	36	10
N20AJ	35	12	8	18	11
N20AB39	61	12	7	36	14
N20AJL	65	12	7	20	16
N30AJ	52	17	8	28	11
N30AJL	75	17	8	25	19
N50AJL	110	25	15	35	26

info@hidrafluid.es
976 24 32 10

Blades for plastic, angled

Model PF

Product notes

> Blades with angled cutting edge
> Model PF: blades with deep angle
> All other blades with standard angle

Technical data

Item no.	Material	Max. cutting thickness [mm]		Weight [g]	Air nippers
		PP/PE	ABS		
N3AP	Ferrous alloy	2	--	35	GT-N3 (p.288), GT-NR3 (p.286), GT-NS3 (p.286)
N5AP	Ferrous alloy	2	--	40	GT-N5 (p.288), GT-NR5 (p.286), GT-NS5 (p.286)
N7AP	Ferrous alloy	3	2	80	GT-N7 (p.288), GT-NR7 (p.286), GT-NS7 (p.286)
N7PF	Ferrous alloy	3	2	80	GT-N7 (p.288), GT-NR7 (p.286), GT-NS7 (p.286)
N10AP	Ferrous alloy	4	2.6	85	GT-N10 (p.288)
N10LAB152	Ferrous alloy	4	2.6	165	GT-NR10L (p.286)
N10LAP	Ferrous alloy	4	2.6	120	GT-NR10L (p.286), GT-NS10L (p.286)
N10LPF	Ferrous alloy	4	2.6	120	GT-NR10L (p.286), GT-NS10L (p.286)
N12AP	Ferrous alloy	4.5	4	135	GT-N12 (p.288)
N20AA239	Ferrous alloy	6	4	195	GT-N20 (p.288), GT-NS20 (p.286)
N20AA27	Ferrous alloy	6.5	4.5	145	GT-N20 (p.288), GT-NS20 (p.286)
N20AB360	Ferrous alloy	7	5	185	GT-NS20 (p.286)
N20AP	Ferrous alloy	7	5	125	GT-NS20 (p.286), GT-N20 (p.288), GT-NR20 (p.286)
N20PF	Ferrous alloy	7	5	130	GT-N20 (p.288), GT-NR20 (p.286), GT-NS20 (p.286)
N30AA114	Ferrous alloy	10	6.5	385	GT-N30 (p.288), GT-NR30 (p.286), GT-NS30 (p.286)
N30AP	Ferrous alloy	10	6.5	380	GT-N30 (p.288), GT-NR30 (p.286), GT-NS30 (p.286)
N30PF	Ferrous alloy	10	6.5	390	GT-N30 (p.288), GT-NR30 (p.286), GT-NS30 (p.286)
N50AB	HSS steel	15	8	1,100	GT-N50 (p.288), GT-NR50 (p.286)
N50ABH41	HSS steel	18	8	1,000	GT-N50 (p.288), GT-NR50 (p.286)

FIPA challenge accepted
info@hidrafluid.es
976 24 32 10

Dimensions

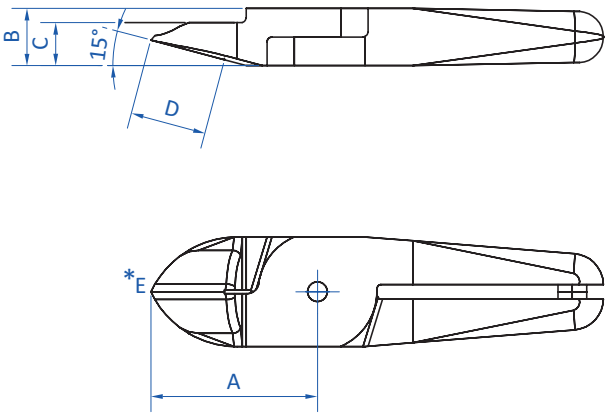

N3AP | N5AP | N7AP | N10AP | N10LAP | N12AP | N20AP | N30AP

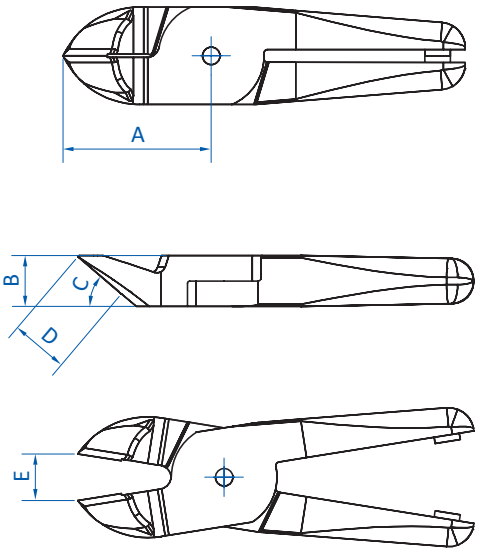

N7PF | N10LPF | N20PF | N30PF

* = width of opening

Item no.	A [mm]	B [mm]	C [°]	D [mm]	E [mm]
N3AP	24	7	15	11.5	4
N5AP	24	7	15	11.5	4
N7AP	27	9	30	11.5	4
N7PF	27	9	40	10.5	4
N10AP	27	9	30	11.5	5
N10LAB152	61	12	15	35	10
N10LAP	35	12	15	16	5
N10LPF	35	12	40	13.5	5
N12AP	35	12	15	16	5
N20AA239	52.3	12	40	27	14
N20AA27	45	12	23	25	12
N20AB360	61	12	15	35	16
N20AP	35	12	15	16	11
N20PF	35	12	40	13.5	11
N30AA114	76.3	17	30	50	20
N30AP	66	17	15	38	16
N30PF	58	17	30	25	15
N50AB	90	25	30	29	21
N50ABH41	119.6	25	30	40	29

info@hidrafluid.es
976 24 32 10

Blades for plastic, laterally facing

Product notes

> Blades with 90° bend cutting edge for sprues in restricted spaces, e.g. sprues of two opposing parts
> AML: blade with left orientation
> AMR: blade with right orientation

Technical data

Item no.	Material	Max. cutting thickness [mm] PP/PE	Max. cutting thickness [mm] ABS	Weight [g]	Air nippers
N20AML	Ferrous alloy	10x1.5	8x1	270	GT-N20 (p.288), GT-NR20 (p.286), GT-NS20 (p.286)
N20AMR	Ferrous alloy	10x1.5	8x1	270	GT-NR20 (p.286), GT-NS20 (p.286), GT-N20 (p.288)
N30AML	Ferrous alloy	15x2	10x1.5	520	GT-N30 (p.288), GT-NR30 (p.286), GT-NS30 (p.286)
N30AMR	Ferrous alloy	15x2	10x1.5	520	GT-N30 (p.288), GT-NR30 (p.286), GT-NS30 (p.286)

Dimensions

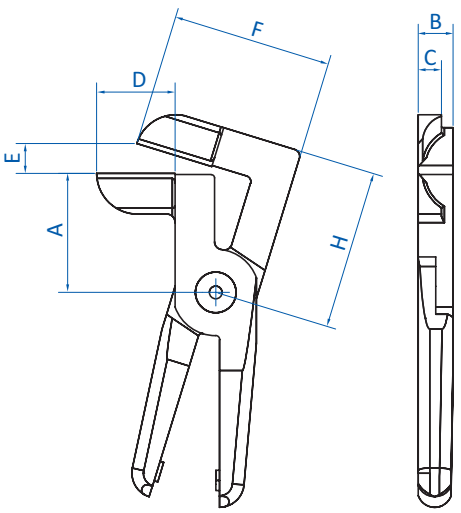

N20AML | N30AML

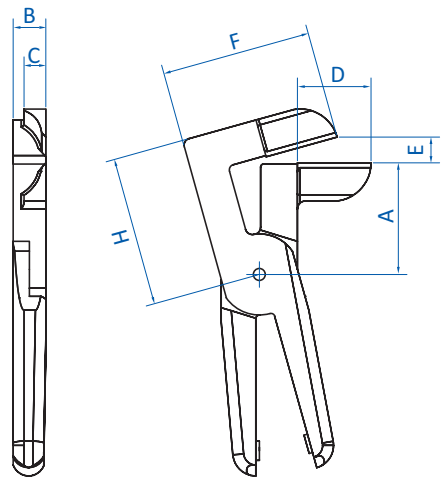

N20AMR | N30AMR

Item no.	A [mm]	B [mm]	C [mm]	D [mm]	E [mm]	F [mm]	H [mm]
N20AML	41	12	8	27	9.5	55	55
N20AMR	41	12	8	27	9.5	55	55
N30AML	39	17	10	36	13	68	55
N30AMR	39	17	10	36	13	68	55

FIPA challenge accepted
info@hidrafluid.es
976 24 32 10

Blades for plastic, L-shape

Product notes

> Long blades with 90° angle for clean cuts

Technical data

Item no.	Material	Max. cutting thickness [mm]		Weight [g]	Air nippers
		PP/PE	ABS		
N20AL	Ferrous alloy	7	5	135	GT-N20 (p.288) GT-NR20 (p.286) GT-NS20 (p.286)
N30AL525	Ferrous alloy	10	6.5	395	GT-N30 (p.288) GT-NR30 (p.286) GT-NS30 (p.286)

Dimensions

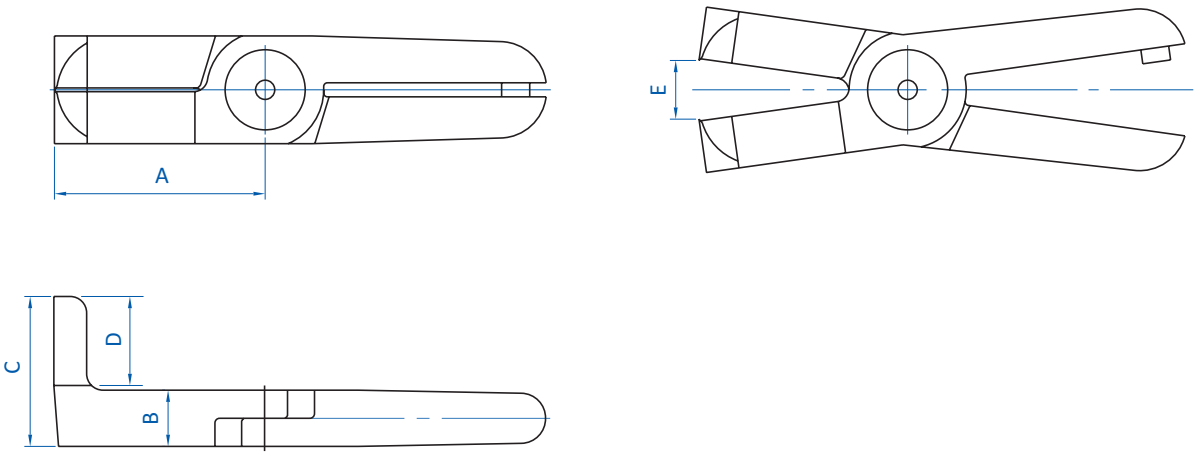

Item no.	A [mm]	B [mm]	C [mm]	D [mm]	E [mm]
N20AL	45	12	32	18	12
N30AL525	60	26	62	36	16

info@hidrafluid.es
976 24 32 10

Singular blades for plastic, Z-shape

Product notes

> Blades with offset cutting edge for overcoming obstacles or for narrow sprues

Technical data

Item no.	Material	Max. cutting thickness [mm]		Weight [g]	Air nippers
		PP/PE	ABS		
N20AH	Ferrous alloy	7	5	240	GT-N20 (p.288) GT-NR20 (p.286) GT-NS20 (p.286)
N30AH	Ferrous alloy	10	6.5	450	GT-N30 (p.288) GT-NR30 (p.286) GT-NS30 (p.286)

Dimensions

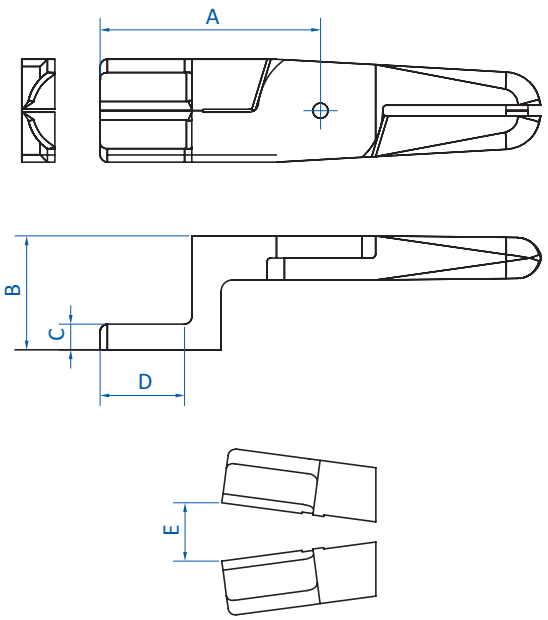

Item no.	A [mm]	B [mm]	C [mm]	D [mm]	E [mm]
N20AH	60	31	7	23	16
N30AH	80	65	8	34	22

FIPA challenge accepted
info@hidrafluid.es
976 24 32 10

Blades for plastic, nipper style

Product notes

> Blades, nipper style, for cutting applications

Technical data

Item no.	Material	Max. cutting thickness [mm]		Weight [g]	Air nippers
		PP/PE	ABS		
N3AE	Ferrous alloy	2	--	35	GT-N3 (p.288), GT-NR3 (p.286), GT-NS3 (p.286)
N5AE	Ferrous alloy	2	--	40	GT-N5 (p.288), GT-NR5 (p.286), GT-NS5 (p.286)
N7AE	Ferrous alloy	3	2	85	GT-N7 (p.288), GT-NR7 (p.286), GT-NS7 (p.286)
N10AE	Ferrous alloy	4	2.6	120	GT-N10 (p.288), GT-NR10L (p.286), GT-NS10L (p.286)
N20AE	Ferrous alloy	7	5	135	GT-N20 (p.288), GT-NR20 (p.286), GT-NS20 (p.286)
N30AE	Ferrous alloy	10	6.5	395	GT-N30 (p.288), GT-NR30 (p.286), GT-NS30 (p.286)
N50AE	Ferrous alloy	12	6.5	1,000	GT-N50 (p.288), GT-NR50 (p.286)

Dimensions

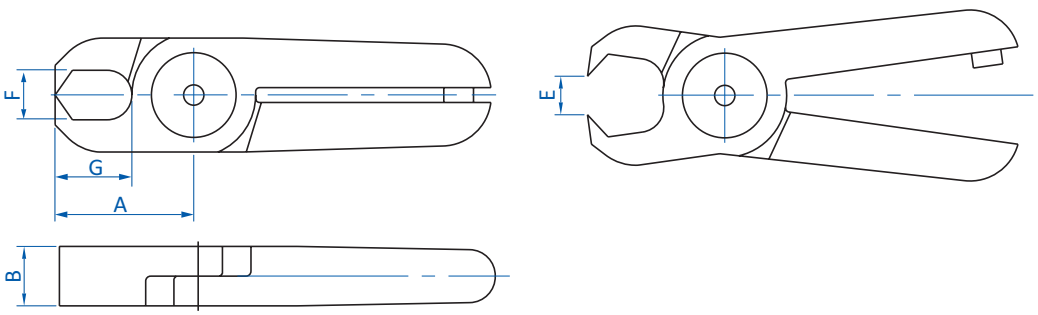

Item no.	**A** [mm]	**B** [mm]	**F x G** [mm]	**E** [mm]
N3AE	20	7	6x6.6	3.5
N5AE	20	7	6x6.6	3.5
N7AE	26	9	8x8.8	4
N10AE	26	9	8x15.5	10
N20AE	28	12	10x15.5	8
N30AE	45	17	13x28	12
N50AE	128	25	25x90	30

info@hidrafluid.es
976 24 32 10

Blades for metal, straight

Model BJ

Product notes

> Straight blades with one unbeveled cutting edge using the anvil principle or with carbide tips for extra strength
> BJ: blades using anvil principle to cut thin wire
> N20BFB and N50AS: blades in clipper type shape with carbide tips to cut thicker wire or thin pipes

Technical data

Item no.	Material	Max. cutting thickness [mm]			Weight [g]	Air nippers
		Copper wire	Steel wire	Piano wire		
N3BJ	Ferrous alloy	1	0.5	--	35	GT-N3 (p.288) GT-NR3 (p.286) GT-NS3 (p.286)
N5BJ	Ferrous alloy	1	0.5	--	40	GT-N5 (p.288) GT-NR5 (p.286) GT-NS5 (p.286)
N7BJ	Ferrous alloy	1.6	1	--	75	GT-N7 (p.288) GT-NR7 (p.286) GT-NS7 (p.286)
N20BFB	Sintered alloy	2.6	2	1.2	150	GT-N20 (p.288) GT-NR20 (p.286) GT-NS20 (p.286)
N50AS	Ferrous alloy	5.5	4.5	--	950	GT-N50 (p.288) GT-NR50 (p.286)

FIPA challenge accepted
info@hidrafluid.es
976 24 32 10

Dimensions

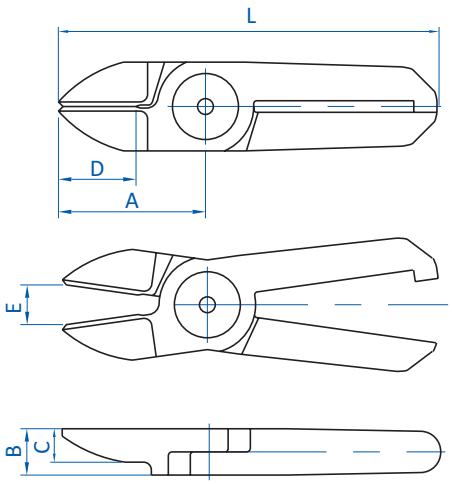

N3BJ | N5BJ | N7BJ

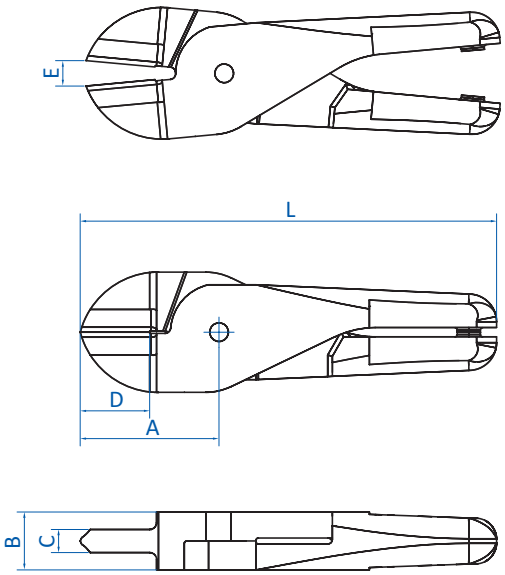

N20BFB | N50AS

Item no.	**A** [mm]	**B** [mm]	**C** [mm]	**D** [mm]	**E** [mm]	**L** [mm]
N3BJ	24	7	5.8	13	5	64
N5BJ	24	7	5.8	13	4	64
N7BJ	27	9	7.5	13	5	81
N20BFB	35	12	5	17	8	95
N50AS	60	25	10	30	11	180

info@hidrafluid.es
976 24 32 10

Blades for metal, angled

Product notes

> Blades with a beveled cutting edge using the anvil principle
> N30BBB and N50BBB: blades with carbide tips to cut hard wire such as high steel wire or piano wire

Technical data

Item no.	Material	Max. cutting thickness [mm]			Weight [g]	Air nippers
		Copper wire	Steel wire	Piano wire		
N3AS	Ferrous alloy	1	0.5	--	35	GT-N3 (p.288), GT-NR3 (p.286), GT-NS3 (p.286)
N3HS	HSS steel	1	0.5	0.2	35	GT-N3 (p.288), GT-NR3 (p.286), GT-NS3 (p.286)
N5AS	Ferrous alloy	1	0.5	--	40	GT-N5 (p.288), GT-NR5 (p.286), GT-NS5 (p.286)
N5HS	HSS steel	1	0.5	0.3	40	GT-N5 (p.288), GT-NR5 (p.286), GT-NS5 (p.286)
N7AS	Ferrous alloy	1.6	1	--	80	GT-N7 (p.288), GT-NR7 (p.286), GT-NS7 (p.286)
N7HS	HSS steel	1.6	1	0.5	80	GT-N7 (p.288), GT-NR7 (p.286), GT-NS7 (p.286)
N10AS	Ferrous alloy	1.8	1.2	--	85	GT-N10 (p.288)
N10HS	HSS steel	2.3	1.7	--	85	GT-N10 (p.288)
N10LAS	Ferrous alloy	1.8	1.2	--	120	GT-NR10L (p.286), GT-NS10L (p.286)
N12AS	Ferrous alloy	2.3	1.7	--	135	GT-N12 (p.288)
N12HS	HSS steel	1.3	2.7	--	95	GT-N12 (p.288)
N20AS	Ferrous alloy	2.6	2	--	140	GT-N20 (p.288), GT-NR20 (p.286), GT-NS20 (p.286)
N20HS	HSS steel	2.6	2	1	135	GT-N20 (p.288), GT-NR20 (p.286), GT-NS20 (p.286)
N30AS	Ferrous alloy	3.3	2.8	--	370	GT-N30 (p.288), GT-NR30 (p.286), GT-NS30 (p.286)
N30BBB	Sintered alloy	3.3	2.8	1.2	365	GT-N30 (p.288), GT-NR30 (p.286), GT-NS30 (p.286)
N50BBB	Sintered alloy	5.5	4.5	2	955	GT-N50 (p.288), GT-NR50 (p.286)

FIPA challenge accepted
info@hidrafluid.es
976 24 32 10

Dimensions

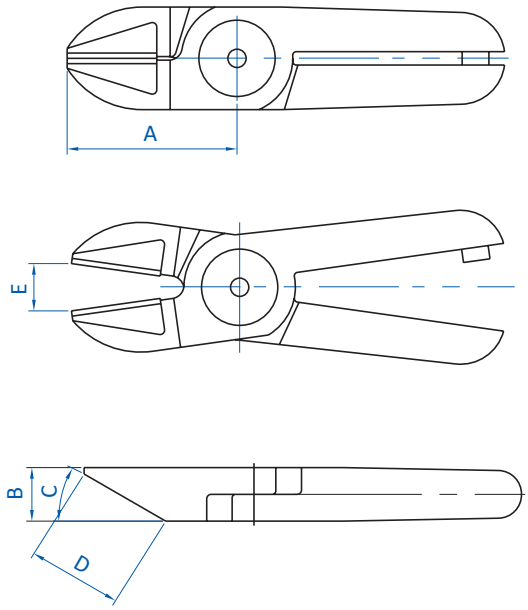

Item no.	A [mm]	B [mm]	C [°]	D [mm]	E [mm]
N3AS	24	7	25	12	4
N3HS	24	7	25	12	4
N5AS	24	7	25	12	4
N5HS	24	7	25	12	4
N7AS	27	9	30	13.5	4
N7HS	27	9	30	13.5	4
N10AS	27	9	30	13.5	5
N10HS	27	9	30	13.5	5
N10LAS	35	12	30	20	5
N12AS	35	12	30	20	5
N12HS	35	12	30	20	9
N20AS	35	12	30	20	9
N20HS	26	12	40	10	7
N30AS	43	17	30	25	9
N30BBB	36	17	40	18	7
N50BBB	46	25	35	19	9

info@hidrafluid.es
976 24 32 10

Stationary air nippers – horizontal without stroke

AIR NIPPERS FOR PLASTIC AND METAL

Product notes

> Nippers, lightweight and compact, for easy installation in restricted spaces
> To be used with cutting stations or automated equipment
> Mounting holes at three sides
> Max. blade opening and nipper length "K" refer to blades with index "AJ" resp. "RAJ"
> Blades are not included in the scope of delivery. Please order separately.

Technical data

Item no.	Max. cutting force [N]	Air consumption [cm³/stroke]	Operating pressure [bar (psi)]	Max. opening for cutting [mm]	Pipe connection [mm]	Weight [g]
GT-NF05	343	43	4 - 5 (58 - 72.5)	4	4	101
GT-NF10	490	63	4 - 5 (58 - 72.5)	6	4	143
GT-NF15	784	128	4 - 5 (58 - 72.5)	8	4	219

Dimensions

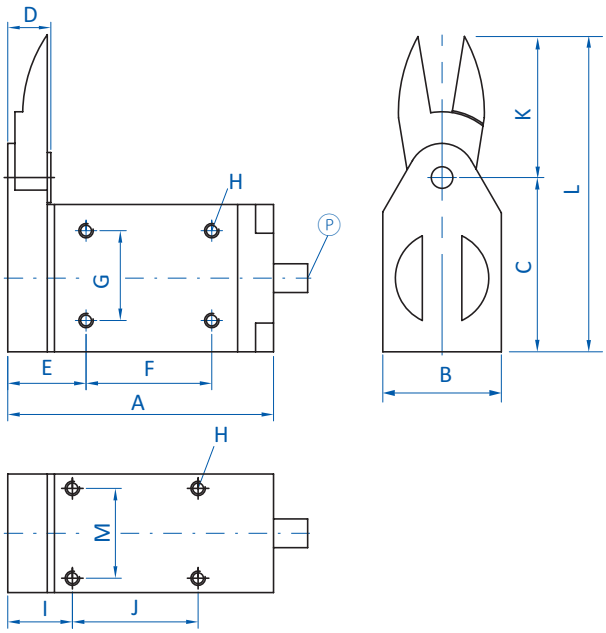

Ⓟ = Compressed air connection 4 mm x 2.5 mm

Item no.	A [mm]	B [mm]	C [mm]	D [mm]	E [mm]	F [mm]	G [mm]	H	I [mm]	J [mm]	K [mm]	L [mm]	M [mm]
GT-NF05	59.9	23	39.5	8.6	25.9	17	26	M3	21.9	17	22	61.5	18
GT-NF10	65.1	28	43.5	8.8	27.1	20	30	M3.5	23.1	20	24	67.5	22
GT-NF15	73	33	48.5	10.2	29	25	34	M4	25	25	27	75.5	26

FIPA challenge accepted
info@hidrafluid.es
976 24 32 10

Stationary air nippers – horizontal with stroke

Product notes

> Nippers, lightweight and compact, for easy assembly in restricted spaces
> To be used with cutting stations or automated equipment
> Stroke single-acting with return spring
> Horizontal, adjustable stroke enables cutting flush to the workpiece
> Connection via hose nipples or quick fittings
> Version (-R): push stroke models
> All others: pull stroke models
> Max. opening width and length "K" refer to blades with index "AJ" or "RAJ"
> Blades are not included in the scope of delivery. Please order separately.

Technical data

Item no.	Max. cutting force [N]	Air consumption [cm³/stroke]	Max. stroke [mm]	Operating pressure [bar (psi)]	Pipe connection with hose nipple [mm]	Pipe connection with quick connect fittings [mm]	Weight [g]
GT-NY05	343	48	3	4 - 5 (58 - 72.5)	2.5	--	155
GT-NY05R	343	48	3	4 - 5 (58 - 72.5)	2.5	--	155
GT-NY05-4	343	48	3	4 - 5 (58 - 72.5)	--	4x2,5	155
GT-NY05R-4	343	48	3	4 - 5 (58 - 72.5)	--	4x2,5	155
GT-NY10	490	68	3	4 - 5 (58 - 72.5)	2.5	--	210
GT-NY10R	490	68	3	4 - 5 (58 - 72.5)	2.5	--	210
GT-NY10-4	490	68	3	4 - 5 (58 - 72.5)	--	4x2,5	210
GT-NY10R-4	490	68	3	4 - 5 (58 - 72.5)	--	4x2,5	210
GT-NY15	784	136	3	4 - 5 (58 - 72.5)	2.5	--	319
GT-NY15R	784	136	3	4 - 5 (58 - 72.5)	2.5	--	319
GT-NY15-4	784	136	3	4 - 5 (58 - 72.5)	--	4x2,5	319
GT-NY15R-4	784	136	3	4 - 5 (58 - 72.5)	--	4x2,5	319
GT-NY25	980	184	5	5 - 6 (72.5 - 87)	4	--	580
GT-NY25R	980	184	5	5 - 6 (72.5 - 87)	4	--	580
GT-NY25-6	980	184	5	5 - 6 (72.5 - 87)	--	6x4	580
GT-NY25R-6	980	184	5	5 - 6 (72.5 - 87)	--	6x4	580

Continued on the next page

info@hidrafluid.es
976 24 32 10

Dimensions

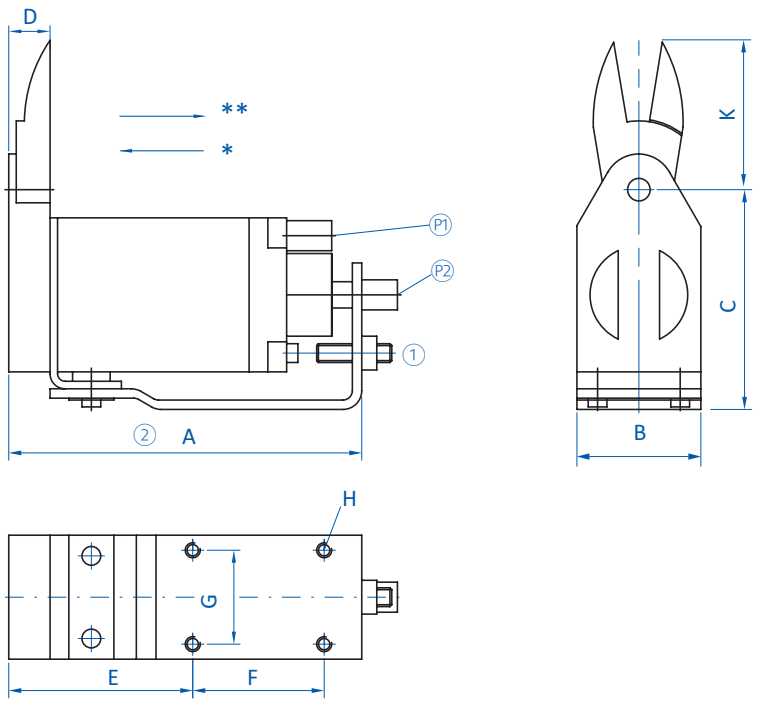

P1 = Compressed air connection for cutting P2 = Compressed air connection for stroke * = Push stroke (Version -R) ** = Pull stroke
1 = Stroke adjustment
2 = Models NY: A = Distance from start of nipper to cutting position / Models NY-R: A = Distance from start of nipper to starting position

Item no.	A [mm]	B [mm]	C [mm]	D [mm]	E [mm]	F [mm]	G [mm]	H	K [mm]
GT-NY05	75.9	23	48	8.6	41	25	15	M4	22
GT-NY05R	75.9	23	48	8.6	41	25	15	M4	22
GT-NY05-4	75.9	23	48	8.6	41	25	15	M4	22
GT-NY05R-4	75.9	23	48	8.6	41	25	15	M4	22
GT-NY10	82.1	28	52	8.8	42	30	20	M4	24
GT-NY10R	82.1	28	52	8.8	42	30	20	M4	24
GT-NY10-4	82.1	28	52	8.8	42	30	20	M4	24
GT-NY10R-4	82.1	28	52	8.8	42	30	20	M4	24
GT-NY15	93	33	58	10	48	35	25	M4	27
GT-NY15R	93	33	58	10	48	35	25	M4	27
GT-NY15-4	93	33	58	10	48	35	25	M4	27
GT-NY15R-4	93	33	58	10	48	35	25	M4	27
GT-NY25	109	42	69	13	55	40	30	M5	31
GT-NY25R	109	42	69	13	55	40	30	M5	31
GT-NY25-6	109	42	69	13	55	40	30	M5	31
GT-NY25R-6	109	42	69	13	55	40	30	M5	31

FIPA challenge accepted
info@hidrafluid.es
976 24 32 10

Blades for plastic, straight

Product notes

> Straight blades that can be applied at the right angle to the gate
> Models with a variety of cutting edges to cover different applications
> AJ: standard blade
> RAJ: reverse cutting edge if cutting flush to workpiece with blade "AJ" is not possible
> AJT: blade extra thin
> AJL: blade extra long to overcome distance between sprue and nipper
> AJB:
- Soldered carbide tips for cutting hard plastics or plastics containing fiberglass
- Higher lifetime in demanding applications

Technical data

Item no.	Material	Max. cutting thickness [mm]		Weight [g]	Air nippers
		PP/PE	ABS		
NY05AJ	Ferrous alloy	3	2	22	GT-NF05 (p.308), GT-NY05 (p.309), GT-NY05-4 (p.309)
NY05AJB	Ferrous alloy	3	2	22	GT-NF05 (p.308), GT-NY05 (p.309), GT-NY05-4 (p.309)
NY05AJL	Ferrous alloy	3	2	29	GT-NF05 (p.308), GT-NY05 (p.309), GT-NY05-4 (p.309)
NY05AJT	Ferrous alloy	3	2	21	GT-NF05 (p.308), GT-NY05 (p.309), GT-NY05-4 (p.309)
NY05RAJ	Ferrous alloy	3	2	22	GT-NF05 (p.308), GT-NY05-4 (p.309), GT-NY05R (p.309), GT-NY05R-4 (p.309)
NY10AJ	Ferrous alloy	3.5	2.3	28	GT-NF10 (p.308), GT-NY10 (p.309), GT-NY10-4 (p.309)
NY10AJB	Sintered alloy	3.5	2.3	28	GT-NF10 (p.308), GT-NY10-4 (p.309), GT-NY10R (p.309)
NY10AJL	Ferrous alloy	3.5	2.3	37	GT-NF10 (p.308), GT-NY10 (p.309), GT-NY10-4 (p.309)
NY10AJT	Ferrous alloy	3.5	2.3	26	GT-NF10 (p.308), GT-NY10 (p.309), GT-NY10-4 (p.309)
NY10RAJ	Ferrous alloy	3.5	2.3	28	GT-NF10 (p.308), GT-NY10R (p.309), GT-NY10R-4 (p.309)
NY15AJ	Ferrous alloy	4	2.6	41	GT-NF15 (p.308), GT-NY15 (p.309), GT-NY15-4 (p.309)
NY15AJB	Sintered alloy	4	2.6	41	GT-NF15 (p.308), GT-NY15-4 (p.309), GT-NY15R (p.309)
NY15AJL	Ferrous alloy	4	2.6	50	GT-NF15 (p.308), GT-NY15 (p.309), GT-NY15-4 (p.309)
NY15RAJ	Ferrous alloy	4	2.6	41	GT-NF15 (p.308), GT-NY15R (p.309), GT-NY15R-4 (p.309)
NY15AJT	Ferrous alloy	4	2.6	38	GT-NF15 (p.308), GT-NY15 (p.309), GT-NY15R-4 (p.309)
NY25AJ	Ferrous alloy	5	3.4	77	GT-NY25 (p.309), GT-NY25-6 (p.309)
NY25RAJ	Ferrous alloy	5	3.4	77	GT-NY25 (p.309), GT-NY25R-6 (p.309)
NY25AJB	Sintered alloy	5	3.4	77	GT-NY25 (p.309), GT-NY25R-6 (p.309)
NY25AJL	Ferrous alloy	5	3.4	88	GT-NY25 (p.309), GT-NY25-6 (p.309)

Continued on the next page

info@hidrafluid.es
976 24 32 10

Dimensions

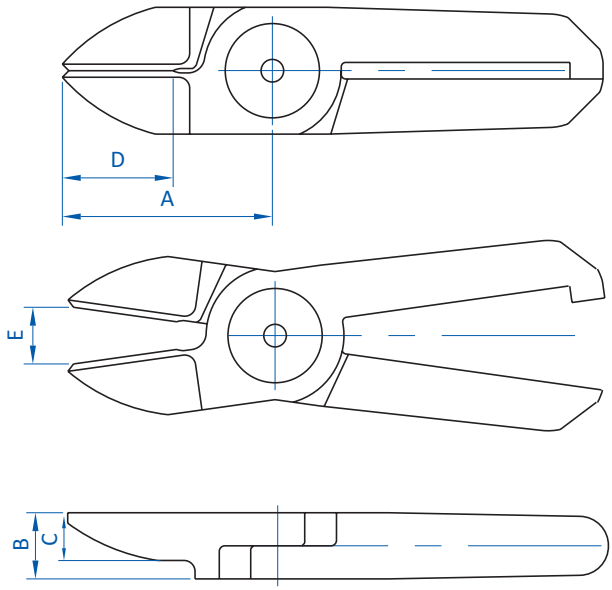

Item no.	A [mm]	B [mm]	C [mm]	D [mm]	E [mm]
NY05AJ	22	7	5	10.5	4
NY05AJB	22	7	5	10.5	4
NY05AJL	31	7	5	10.5	5.5
NY05AJT	22	7	3	10.5	4
NY05RAJ	22	7	5	10.5	4
NY10AJ	24	7.2	5	12	6
NY10AJB	24	7.2	5	12	6
NY10AJL	33	7.2	5	12	8
NY10AJT	24	7.2	3	12	6
NY10RAJ	24	7.2	5	12	6
NY15AJ	27	8.2	5.5	13	8
NY15AJB	27	8.2	5.5	13	8
NY15AJL	38	8.2	5.5	13	11
NY15RAJ	27	8.2	5.5	13	8
NY15AJT	27	8.2	3.5	13	8
NY25AJ	31	10	6	16	9
NY25RAJ	31	10	6	16	9
NY25AJB	31	10	6	16	9
NY25AJL	46	10	6	16	13

FIPA challenge accepted
info@hidrafluid.es
976 24 32 10

Blades for plastic, Z-shape

Product notes

> Blades with offset cutting edge for overcoming obstacles or for narrow sprues
> AH: standard blade
> RAH: reverse cutting edge if cutting flush to workpiece with blade "AH" is not possible

Technical data

Item no.	Material	Max. cutting thickness [mm]		Weight [g]	Air nippers
		PP/PE	ABS		
NY05AH	Ferrous alloy	3	2	37	GT-NF05 (p.308) GT-NY05-4 (p.309) GT-NY05 (p.309)
NY05RAH	Ferrous alloy	3	2	31	GT-NF05 (p.308) GT-NY05R-4 (p.309) GT-NY05R (p.309)
NY10AH	Ferrous alloy	3.5	2.3	43	GT-NF10 (p.308) GT-NY10-4 (p.309) GT-NY10 (p.309)
NY10RAH	Ferrous alloy	3.5	2.3	40	GT-NF10 (p.308) GT-NY10R (p.309) GT-NY10R-4 (p.309)
NY15AH	Ferrous alloy	4	2.6	76	GT-NF15 (p.308) GT-NY15-4 (p.309) GT-NY15 (p.309)
NY15RAH	Ferrous alloy	4	2.6	52	GT-NF15 (p.308) GT-NY15R-4 (p.309) GT-NY15R (p.309)
NY25AH	Ferrous alloy	5	3.4	110	GT-NY25 (p.309) GT-NY25-6 (p.309)
NY25RAH	Ferrous alloy	5	3.4	89	GT-NY25 (p.309) GT-NY25R (p.309) GT-NY25R-6 (p.309)

Continued on the next page

info@hidrafluid.es
976 24 32 10

Dimensions

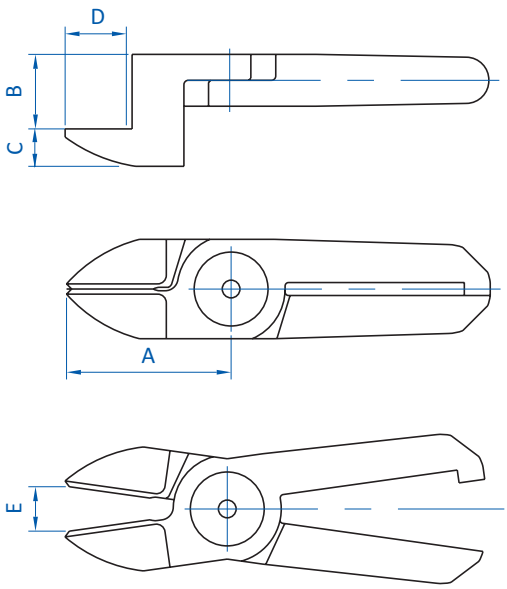

NY05AH | NY10AH | NY15AH | NY25AH

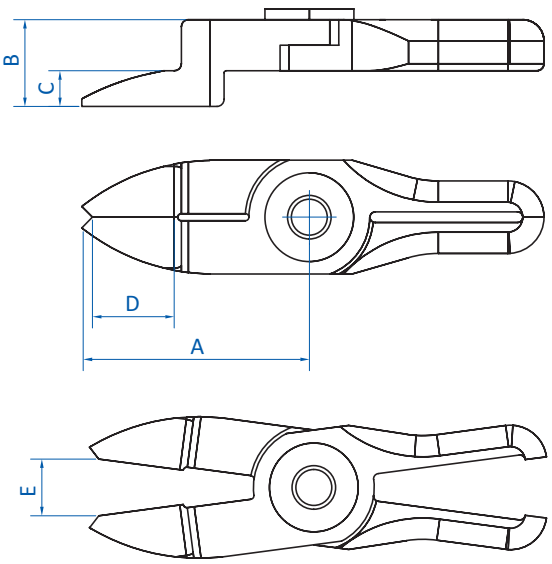

NY05RAH | NY10RAH | NY15RAH | NY25RAH

Item no.	A [mm]	B [mm]	C [mm]	D [mm]	E [mm]
NY05AH	31	14	5	13	5.5
NY05RAH	30	7	5	12	5
NY10AH	33	15	5	15	8
NY10RAH	32	7	5	15	7
NY15AH	38	16	5.5	16	11
NY15RAH	35	7.7	5.5	15	9
NY25AH	46	18	6	19	13
NY25RAH	42	10	5	18	12

FIPA challenge accepted
info@hidrafluid.es
976 24 32 10

Blades for metal wire, straight

Product notes

> Straight blades that can be applied at the right angle to the gate
> Blades for cutting metal, unbeveled cutting edge using the anvil principle
> BJ: standard blade
> RBJ: reverse cutting edge, if cutting flush to workpiece with blade "BJ" is not possible

Technical data

Item no.	Material	Max. cutting thickness [mm]		Weight [g]	Air nippers
		Copper wire	Steel wire		
NY05BJ	Ferrous alloy	1.6	1	22	GT-NF05 (p.308) GT-NY05-4 (p.309) GT-NY05 (p.309)
NY05RBJ	Ferrous alloy	1.6	1	22	GT-NF05 (p.308) GT-NY05R (p.309) GT-NY05R-4 (p.309)

Dimensions

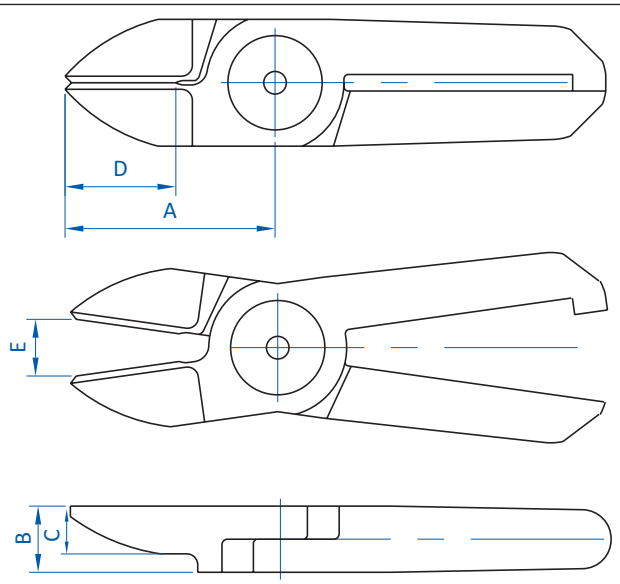

Item no.	A [mm]	B [mm]	C [mm]	D [mm]	E [mm]
NY05BJ	22	7	5	9	3.5
NY05RBJ	22	7	5	10.5	4

info@hidrafluid.es
976 24 32 10

Nippers for plastics – vertical, with stroke

ADJUSTABLE BLADE OPENING AND REVERSABLE BLADES

Product notes

> Nippers, lightweight and compact, for easy assembly in confined spaces
> To be used in cutting stations
> Adjustable horizontal stroke and maximum blade opening
> Blades can be reversed to enable cutting flush to the workpiece
> Max. opening width "I" refers to blades with index "AJ"
> Blades are not included in the scope of delivery. Please order separately.

Technical data

Item no.	Max. cutting force [N]	Air consumption [cm³/stroke]	Max. opening for cutting [mm]	Stroke [mm]	Effective direction	Operating pressure [bar (psi)]	Pipe connection with hose nipple [mm]	Pipe connection with quick connect fittings [mm]	Weight [g]
GT-NT03	147	27	1.5 - 3	0 - 3	Pull	4 - 5 (58 - 72.5)	2.5	--	178
GT-NT03R	147	27	1.5 - 3	0 - 3	Push	4 - 5 (58 - 72.5)	2.5	--	178
GT-NT03-4	147	27	1.5 - 3	0 - 3	Pull	4 - 5 (58 - 72.5)	--	4x2,5	178
GT-NT03R-4	147	27	1.5 - 3	0 - 3	Push	4 - 5 (58 - 72.5)	--	4x2,5	178
GT-NT05	196	47	3 - 6	0 - 3	Pull	4 - 5 (58 - 72.5)	2.5	--	325
GT-NT05R	196	47	3 - 6	0 - 3	Push	4 - 5 (58 - 72.5)	2.5	--	325
GT-NT05-4	196	47	3 - 6	0 - 3	Pull	4 - 5 (58 - 72.5)	--	4x2,5	325
GT-NT05R-4	196	47	3 - 6	0 - 3	Push	4 - 5 (58 - 72.5)	--	4x2,5	325
GT-NT10	441	82	4 - 7	0 - 3	Pull	4 - 5 (58 - 72.5)	2.5	--	515
GT-NT10R	441	82	4 - 7	0 - 3	Push	4 - 5 (58 - 72.5)	2.5	--	515
GT-NT10-6	441	82	4 - 7	0 - 3	Pull	4 - 5 (58 - 72.5)	--	6x4	515
GT-NT10R-6	441	82	4 - 7	0 - 3	Push	4 - 5 (58 - 72.5)	--	6x4	515
GT-NT20	931	203	4.5 - 9	0 - 8	Pull	5 - 6 (72.5 - 87)	4	--	930
GT-NT20R	931	203	4.5 - 9	0 - 8	Push	5 - 6 (72.5 - 87)	4	--	930
GT-NT20-6	931	203	4.5 - 9	0 - 8	Pull	5 - 6 (72.5 - 87)	--	6x4	930
GT-NT20R-6	931	203	4.5 - 9	0 - 8	Push	5 - 6 (72.5 - 87)	--	6x4	930

info@hidrafluid.es
976 24 32 10

Dimensions

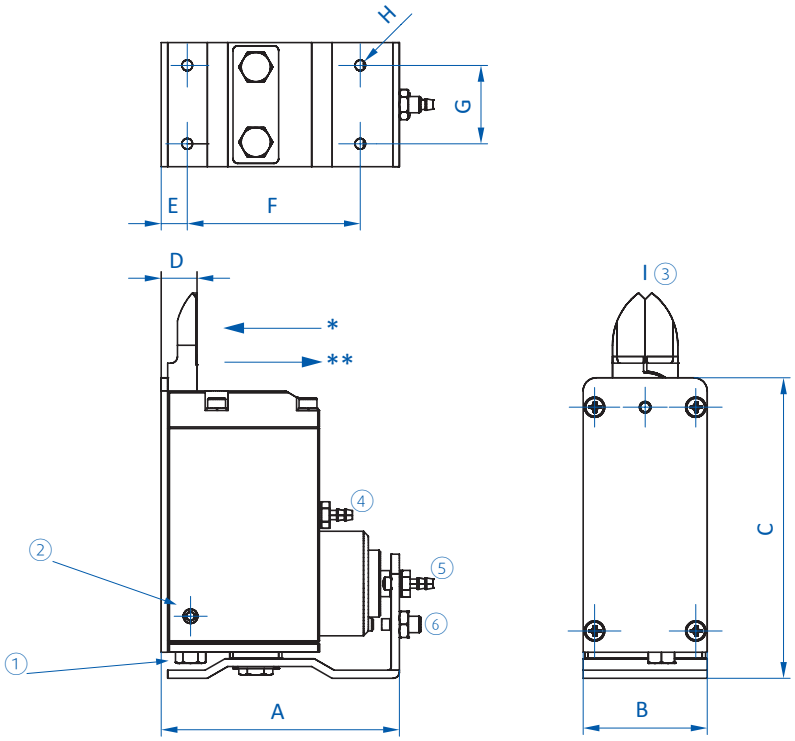

* = Push stroke ** = Pull stroke (Version -R) ① = Blade opening adjustment ② = Locking ③ = Max. blade opening ④ = Connection air nipper ⑤ = Connection stroke movement ⑥ = Stroke adjustment

Item no.	A [mm]	B [mm]	C [mm]	D [mm]	E [mm]	F [mm]	G [mm]	H	I [mm]
GT-NT03	62	19	68.1	9	7	43	14	M3	3
GT-NT03R	62	19	68.1	9	7	43	14	M3	3
GT-NT03-4	62	19	68.1	9	7	43	14	M3	3
GT-NT03R-4	62	19	68.1	9	7	43	14	M3	3
GT-NT05	64	32	71.1	9	7	45	20	M4	6
GT-NT05R	64	32	71.1	9	7	45	20	M4	6
GT-NT05-4	64	32	71.1	9	7	45	20	M4	6
GT-NT05R-4	64	32	71.1	9	7	45	20	M4	6
GT-NT10	73	38	88.1	11	8	52	24	M4	7
GT-NT10R	73	38	88.1	11	8	52	24	M4	7
GT-NT10-6	73	38	88.1	11	8	52	24	M4	7
GT-NT10R-6	73	38	88.1	11	8	52	24	M4	7
GT-NT20	103	44	102.1	14	10	80	28	M5	9
GT-NT20R	103	44	102.1	14	10	80	28	M5	9
GT-NT20-6	103	44	102.1	14	10	80	28	M5	9
GT-NT20R-6	103	44	102.1	14	10	80	28	M5	9

info@hidrafluid.es
976 24 32 10

Blades for plastic, for vertical air nippers, straight

Product notes

> Straight blades that can be applied at the right angle to the gate
> Models with a variety of cutting edges to cover different applications
> AJ: standard blade
> AJT: blade extra thin
> AJL: blade extra long to overcome distance between sprue and nipper
> AJB: brazed carbide tips for cutting hard plastics or plastics containing fiberglass, increased durability
> AJH: brazed high-speed steel tip for cutting hard plastic

Technical data

Item no.	Material	Max. cutting thickness [mm]		Weight [g]	Air nippers
		PP/PE	ABS		
NT03AJ	Ferrous alloy	1.5	1	20	GT-NT03 (p.316)
NT03AJT	Ferrous alloy	1.5	1	19	GT-NT03 (p.316)
NE05AJ	Ferrous alloy	2.5	1.5	35	GT-NT05 (p.316)
NT05AJ	Ferrous alloy	2.5	1.5	30	GT-NT05 (p.316)
NT05AJB	Sintered alloy	2.5	1.5	30	GT-NT05 (p.316)
NT05AJH	HSS steel	2.5	1.5	30	GT-NT05 (p.316)
NT05AJL	Ferrous alloy	2.5	1.5	39	GT-NT05 (p.316)
NT05AJT	Ferrous alloy	2.5	1.5	29	GT-NT05 (p.316)
NE10AJ	Ferrous alloy	3.5	2.3	70	GT-NT10 (p.316)
NT10AJ	Ferrous alloy	3.5	2.3	62	GT-NT10 (p.316)
NT10AJB	Sintered alloy	3.5	2.3	76	GT-NT10 (p.316)
NT10AJH	HSS steel	3.5	2.3	76	GT-NT10 (p.316)
NT10AJL	Ferrous alloy	3.5	2.3	62	GT-NT10 (p.316)
NT10AJT	Ferrous alloy	3.5	2.3	65	GT-NT10 (p.316)
NT20AJ	Ferrous alloy	5	3.4	120	GT-NT20 (p.316)
NT20AJB	Ferrous alloy	5	3.4	120	GT-NT20 (p.316)
NT20AJH	HSS steel	5	3.4	120	GT-NT20 (p.316)
NT20AJL	Ferrous alloy	5	3.4	114	GT-NT20 (p.316)

FIPA challenge accepted
info@hidrafluid.es
976 24 32 10

Dimensions

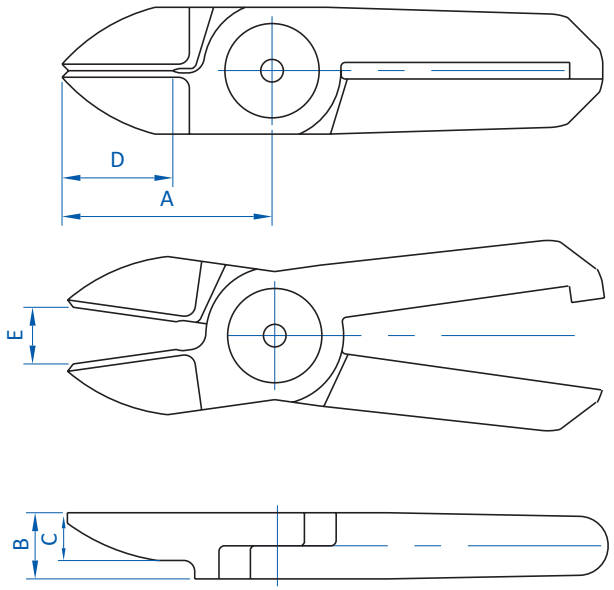

Item no.	A [mm]	B [mm]	C [mm]	D [mm]	E [mm]
NT03AJ	24	7	4	11	3
NT03AJT	24	7	2.3	11	3
NE05AJ	24	7	3.5	12	6
NT05AJ	29	7	5	15	6
NT05AJB	29	7	5	15	6
NT05AJH	29	7	5	15	6
NT05AJL	36	7	5	15	7
NT05AJT	29	7	3	15	6
NE10AJ	27	9	4.5	12	7
NT10AJ	35	9	6	17	7
NT10AJB	35	9	6	17	7
NT10AJH	35	9	6	17	7
NT10AJL	47	9	6	17	9
NT10AJT	35	9	4	17	7
NT20AJ	40	12	6	20	9
NT20AJB	40	12	6	20	9
NT20AJH	40	12	6	20	9
NT20AJL	57	12	6	20	12

info@hidrafluid.es
976 24 32 10

Blades for plastic, for vertical air nippers, nipper style

Product notes

> Blades, nipper style, for universal cutting applications

Technical data

Item no.	Material	Max. cutting thickness [mm]		Weight [g]	Air nippers
		PP/PE	ABS		
NT05AE	Ferrous alloy	2.5	1.5	36	GT-NT05 (p.316)
NT10AE	Ferrous alloy	3.5	2.3	75	GT-NT10 (p.316)

Dimensions

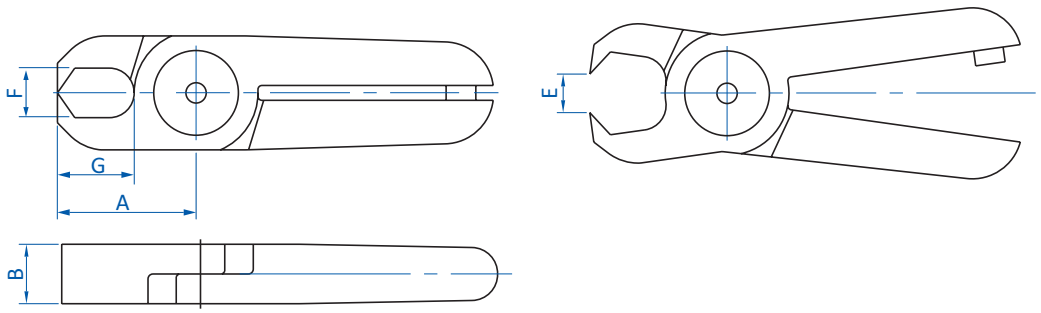

Item no.	A [mm]	B [mm]	E [mm]	F [mm]	G [mm]
NT05AE	29	7	6	6	18
NT10AE	35	9	7	8	21.5

FIPA challenge accepted
info@hidrafluid.es
976 24 32 10

Special air shears – round/square, single-acting

Product notes

> Pneumatic shears for robots, cutting stations or manual operation
> For precision cutting of kevlar, aramid, glass and carbon fiber
> GT-H30, GT-HS30, GT-H12K: designed to cut synthetic materials; not suitable for thick cardboard, tin plate, wire, wood, etc.
> Blades are not included in the scope of delivery. Please order separately.

Technical data

Item no.	Housing	Air consumption [cm³/stroke]	Operating pressure [bar (psi)]	Functional principle	Length incl. blade [mm]	Connection [G]	Max. cutting thickness [mm]		Weight [g]
							Band steel	Kevlar	
GT-H12K	Round	116	2 (29)	Manually	186	R1/8	--	0.3	290
GT-H120K	Round	116	5 - 6 (72.5 - 87)	Manually	211	R1/8	15x0.5	--	340
GT-H30	Round	584	3 (43.5)	Manually	280	R1/8	--	1	1,030
GT-HS30	Square	584	3 (43.5)	Automatically	260	R1/8	--	1	970

Dimensions

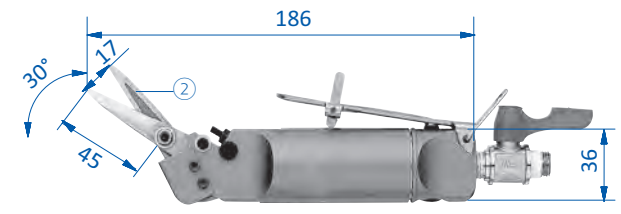

GT-H12K

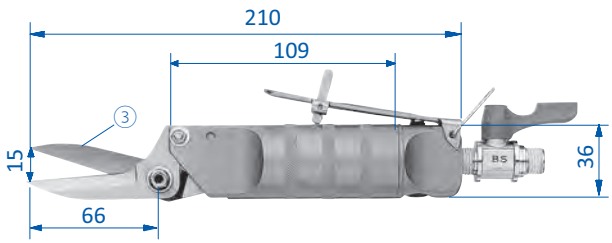

GT-H120K

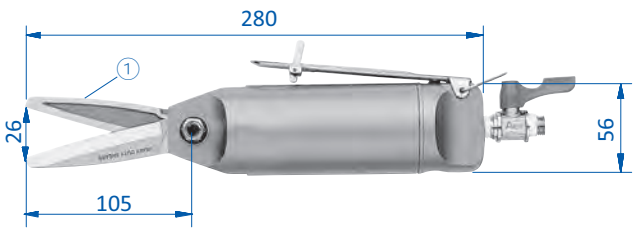

GT-H30

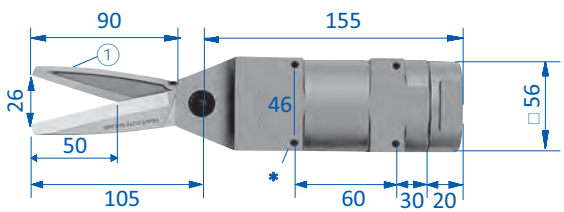

GT-HS30

① = Blade shown: H30ME ② = Blade shown: H12ME30K ③ = Blade shown: H120SK * = 4 x 4 bore holes M5

info@hidrafluid.es
976 24 32 10

Blades for special air shears, single-acting

Product notes

> Blades for cutting synthetic materials, e.g. kevlar, aramid, glass and carbon fiber
> With the exception of H120SK not suitable for thick cardboard, sheet tin, wire, wood

Technical data

Item no.	Max. opening for cutting [mm]	Effective cutting length [mm]	Max. cutting thickness [mm]		Weight [g]	Air nippers
			Kevlar	Band steel		
H30ME	26	50	1	--	280	GT-H30 (p.321) GT-HS30 (p.321)
H12ME30K	17	28	0.3	--	56	GT-H12K (p.321)
H120SK	15	38	--	15x0.5	115	GT-H120K (p.321)

Dimensions

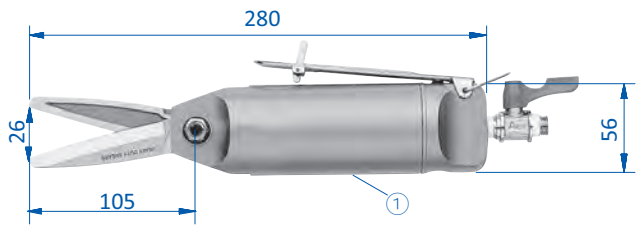

H30ME

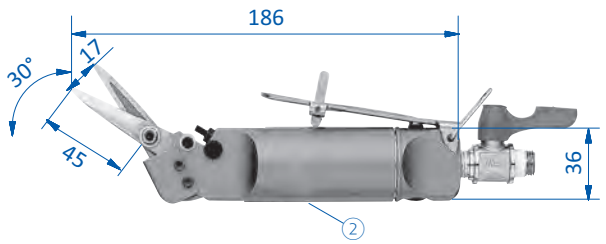

H12ME30K

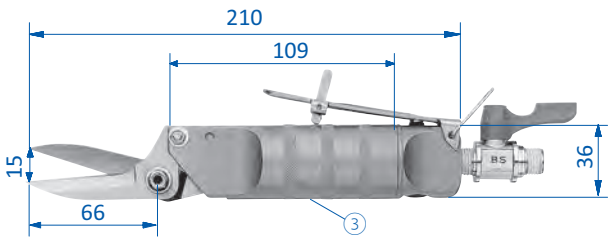

H120SK

① = Special air shear shown: GT-H30 ② = Special air shear shown: GT-H12K ③ = Special air shear shown: GT-H120K

FIPA challenge accepted
info@hidrafluid.es
976 24 32 10

Air shears – round/square, double-acting

FOR FAST CYCLE TIMES

Product notes

> Pneumatic shears for robots, cutting stations or manual operation
> Cutting of paper, film, steel or copper wire, etc.
> Double-acting, separate control of opening and closing to enable short duty cycles
> Continuous cutting process as no return spring required
> Blades are not included in the scope of delivery. Please order separately.

Technical data

Item no.	Housing	Max. cutting force [N]	Air consumption [cm³/stroke]	Operating pressure [bar (psi)]	Pipe connection [mm]	Weight [g]
GT-HWS1	Square	294	45	4 - 5 (58 - 72.5)	4	116
GT-HWR1	Round	294	45	4 - 5 (58 - 72.5)	4	84
GT-HWS10	Square	588	116	4 - 5 (58 - 72.5)	6	356
GT-HWR10	Round	588	116	4 - 5 (58 - 72.5)	6	295

Dimensions

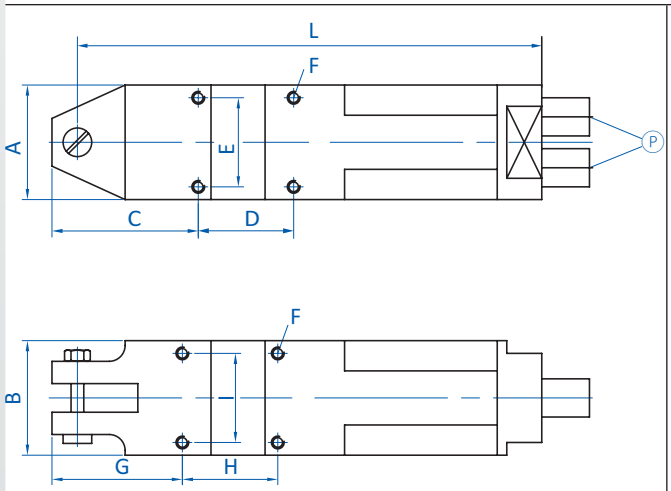

GT-HWS1 | GT-HWS10

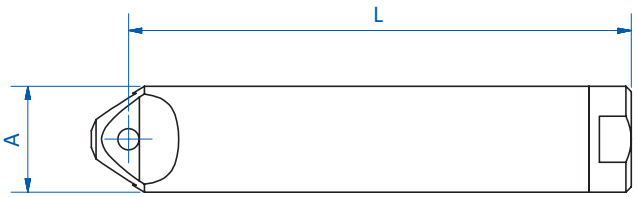

GT-HWR1 | GT-HWR10

Ⓟ = Compressed air connection

Item no.	A [mm]	B [mm]	C [mm]	D [mm]	E [mm]	F	G [mm]	H [mm]	I [mm]	L [mm]
GT-HWS1	20	23	--	--	--	M3	24	40	16	95
GT-HWR1	20	--	--	--	--	--	--	--	--	95
GT-HWS10	36	36	45.5	30	28	M4	41	30	28	146
GT-HWR10	36	--	--	--	--	--	--	--	--	146

info@hidrafluid.es
976 24 32 10

Blades for double-acting air shears

Product notes

> Blades for double-acting air shears
> Suitable for cutting copper or steel wire

Technical data

Item no.	Max. opening for cutting [mm]	Effective cutting length [mm]	Max. cutting thickness [mm]		Weight [g]	Air nippers
			Copper wire	Steel wire		
HW1J	3	17	1	0.5	116	GT-HWR1 (p.323) GT-HWS1 (p.323)
HW10J	5	28	1.8	1.2	84	GT-HWR10 (p.323) GT-HWS10 (p.323)

Dimensions

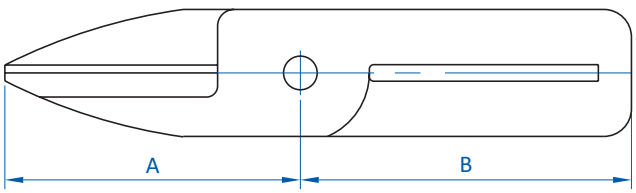

Item no.	**A** [mm]	**B** [mm]
HW1J	25	30
HW10J	40	55

FIPA challenge accepted
info@hidrafluid.es
976 24 32 10

Air-nipper mounting brackets

Product notes

> Mounting brackets to fasten air nippers to angle clamps

Technical data

Item no.	Clamping Ø [mm]	Weight [g]	Air nippers
GT-NR10H	14	38	GT-NR10L (p.286)
GT-NR20H	20	71	GT-NR20 (p.286)
GT-NR30H	20	79	GT-NR30 (p.286)
GT-NR50H	20	149	GT-NR50 (p.286)

Dimensions

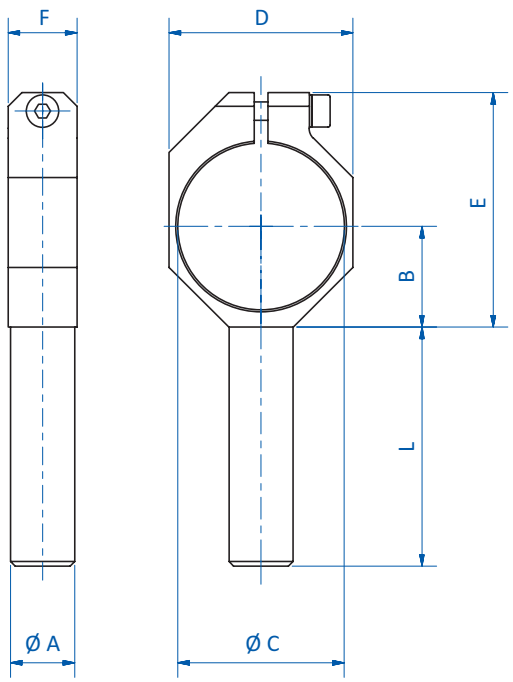

Item no.	Ø A [mm]	B [mm]	Ø C [mm]	D [mm]	E [mm]	F [mm]	L [mm]
GT-NR10H	14	22	36	40	51	15	52
GT-NR20H	20	30	45	50	65	20	52
GT-NR30H	20	35	56	60	75	20	52
GT-NR50H	20	45	75	85	95	20	52

info@hidrafluid.es
976 24 32 10

Mounting clamps for air nippers

Air nipper GT-NR20 with mounting clamp

Product notes

> Space-saving assembly of air nippers on extrusions and special machines
> The clamps are part of air nipper fittings GT-NR10ST2 to GT-NR30ST2

Technical data

Item no.	Weight [g]	Air nippers
GT-NR10S	36	GT-NR10L (p.286)
GT-NR20S	39	GT-NR20 (p.286)
GT-NR30S	46	GT-NR30 (p.286)

Dimensions

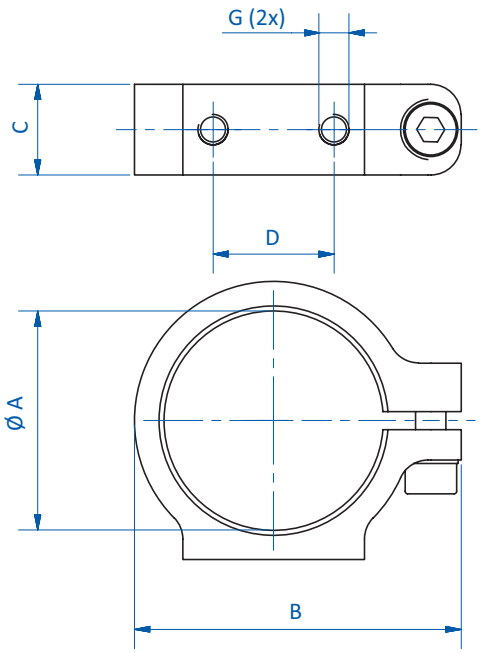

Item no.	Ø A [mm]	B [mm]	C [mm]	D [mm]	G
GT-NR10S	36	54	15	20	M5
GT-NR20S	45	62.5	15	20	M5
GT-NR30S	56	73.5	15	20	M5

FIPA challenge accepted
info@hidrafluid.es
976 24 32 10

Clamps with angle brackets – for direct mounting

Mounting air nippers on EOAT or special machines

Air nipper GT-NR20 assembled on extrusion SLine

Product notes

> Mounting bracket for installation on grippers or special machines
> Easy positioning of the air nipper thanks to 2x 90° adjustable design
> Versatile thanks to alternative installation using slot nuts or threaded shaft holder
> Slot nuts and mounting screws for installation on FIPA SLine and MLine extrusions included in scope of delivery

Technical data

Item no.	Weight [g]	Air nippers
GT-NR10ST2	116	GT-NR10L (p.286)
GT-NR20ST2	119	GT-NR20 (p.286)
GT-NR30ST2	125	GT-NR30 (p.286)
GT-NR50ST2	165	GT-NR50 (p.286)

Dimensions

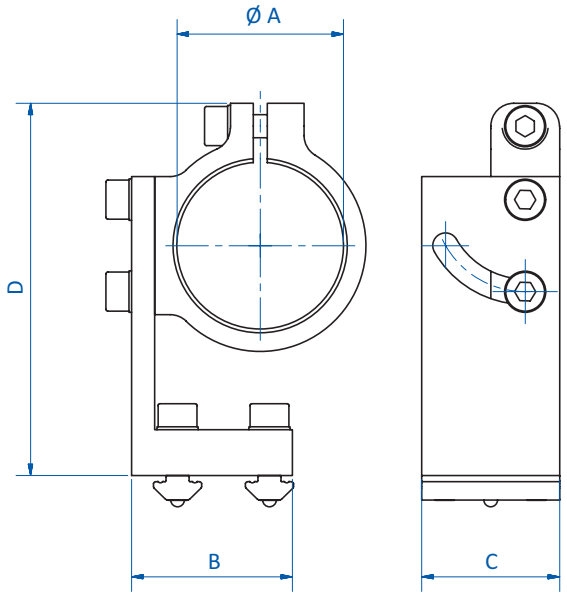

Item no.	Ø **A** [mm]	**B** [mm]	**C** [mm]	**D** [mm]
GT-NR10ST2	36	35	30	81
GT-NR20ST2	45	35	30	87.5
GT-NR30ST2	56	35	30	90.5
GT-NR50ST2	75	35	30	109.5

info@hidrafluid.es
976 24 32 10

Gripper clamps

Product notes

> Mounting of the grippers to the air nippers for holding the sprue during the cutting process
> Optimal adjustment by using elbow gripper arms

Technical data

Item no.	Weight [g]	Air nippers
GT-NR10GR	57	GT-NR10L (p.286)
GT-NR20GR	60	GT-NR20 (p.286)
GT-NR30GR	66	GT-NR30 (p.286)

Dimensions

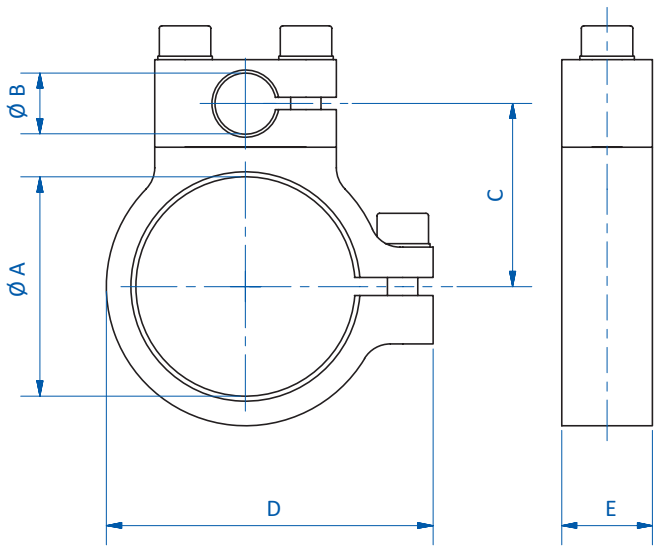

Item no.	Ø A [mm]	Ø B [mm]	C [mm]	D [mm]	E [mm]
GT-NR10GR	36	10	30.25	54	15
GT-NR20GR	45	10	34.75	62.5	15
GT-NR30GR	56	10	40.25	73.5	15

FIPA challenge accepted
info@hidrafluid.es
976 24 32 10

Linear technology at a glance 331

Lifting cylinders 332

Short lifting cylinders 336

Dual-piston cylinders 338

Guide blocks 340

Accessories 350

info@hidrafluid.es
976 24 32 10

Notes:

FIPA challenge accepted

info@hidrafluid.es
976 24 32 10

FIPA Linear technology

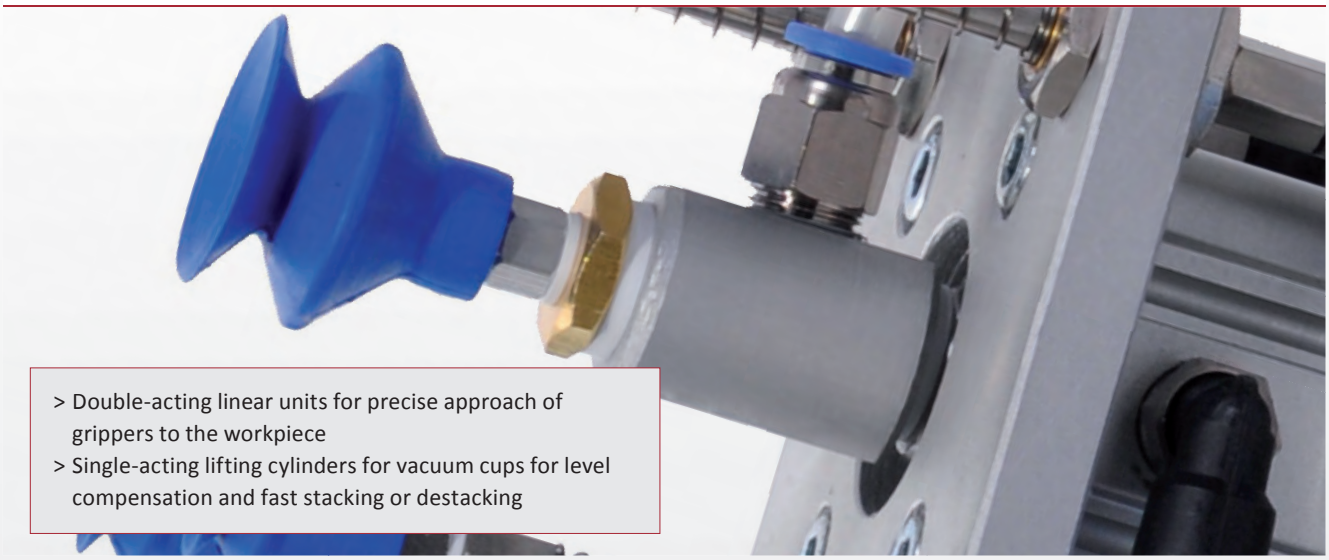

> Double-acting linear units for precise approach of grippers to the workpiece
> Single-acting lifting cylinders for vacuum cups for level compensation and fast stacking or destacking

Lifting cylinders – vacuum-operated or operated by compressed air

> Torsionally rigid piston plunger for fast stacking or destacking of flat objects such as cards, signs, veneer
> Fixation of workpieces in cutting stations
> Model 55.005 comes with integrated blow-off function for short duty cycles

> See page 332

Short stroke cylinders

> Space-saving, lightweight design
> Sensors for optional monitoring of piston position
> To be used as gripping or holding tool when combined with pressure plates GR07.196 - GR07.199

> See page 336

Dual-piston cylinders

> Feed lift of grippers and cutting tools
> Torsionally rigid dual-piston design and precise slide bearing guiding for high loads
> Sensors for optional monitoring of piston position

> See page 338

Guide blocks

> Feed lift of grippers and cutting tools
> GR07.506 to GR07.520 come in extra slim design for space-saving installation
> Sensors for optional monitoring of piston position

> See page 346

info@hidrafluid.es
976 24 32 10

Lifting cylinders – operated by compressed air

With blow-off feature, torsionally rigid

Product notes

> Picking-up and stacking of flat and sensitive objects such as signs, card, labels, veneer in the correct position using non-rotating piston rod
> Integrated vacuum generation
> Very short cycle times due to integrated compressed air pulse during placement
> Very compact design in robust aluminum housing
> Long service life of around 25 million cycles thanks to Hartcoat® treated running surfaces
> Optional monitoring of piston position

Notes

> For release of workpiece in defined position compressed air line needs to be shut and ventilated by means of a 3/2-way valve. Otherwise the piston will not extend and the workpiece will fall down.

Technical data

Item no.	Stroke [mm]	Lifting force at 6 bar (87 psi) [N]	Operating pressure [bar (psi)]	Volume flow at 6 bar (87 psi) [Nl/min]	Operating temperature [°C (°F)]	Weight [g]	Accessories
55.005	25	8	5 - 8 (72.5 - 116)	48	5 - 80 (41 - 176)	220	Silencer: 72.028 (p.398) Magnetic field sensor: 55.099

Wiring diagram

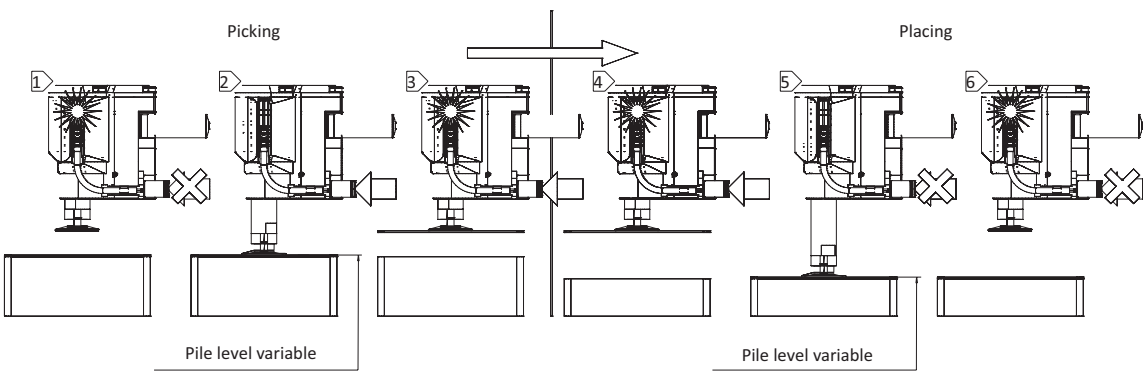

Process:
1. Initial position: compressed air off, piston drawn in, magnetic sensor in operation
2. Compressed air switched on, piston moves out, workpiece is pulled in, piston retracts with the workpiece to the initial position
3. Workpiece sucked in and lifted, compressed air on, magnetic field sensor in operation
4. Transport movement
5. Switch off compressed air, piston moves out with the workpiece, places the workpiece and retracts to the initial position
6. Initial position: compressed air off, piston drawn in, magnetic sensor in operation

FIPA challenge accepted
info@hidrafluid.es
976 24 32 10

Dimensions

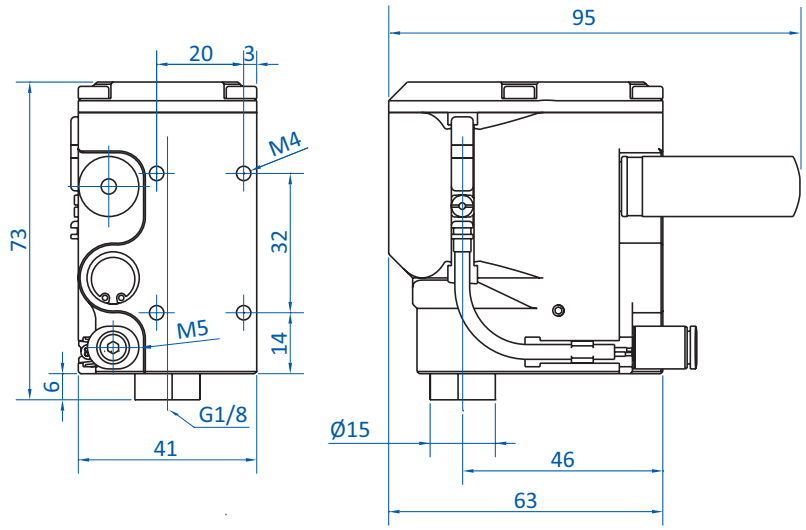

Diagrams

> Double stroke lifting time against weight, pressure 6 bar (87 psi)

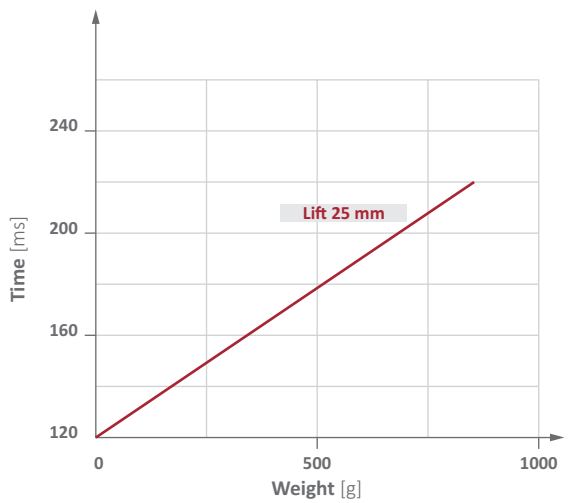

> Double stroke placing time against weight, pressure 6 bar (87 psi)

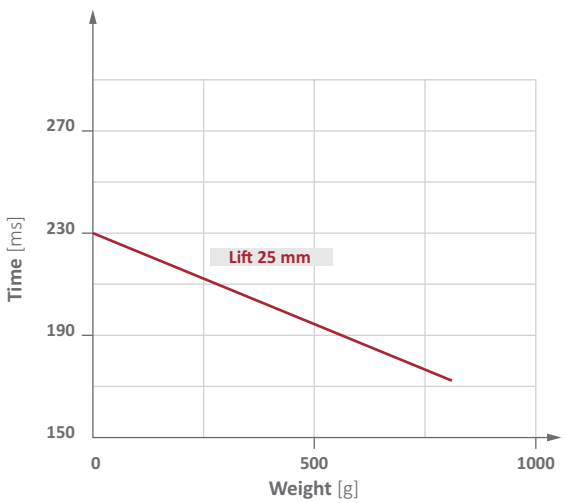

info@hidrafluid.es
976 24 32 10

Lifting cylinders – vacuum-operated

Torsionally rigid

55.000 | 55.001 | 55.004

55.002

Product notes

> Picking-up and stacking flat and sensitive objects such as e.g. signs, cards, paper, veneers
> Suitable for short cycle times
> Application e.g. for workpiece positioning in cutting stations
> Robust aluminum housing, Hartcoat® treated
> Non-rotating piston rod
> Low-noise version
> 55.002: stacking and lifting of metal sheet and heavy parts
> Not suitable for workpieces permeable to air
> Customized sizes on request

Technical data

Item no.	Stroke [mm]	Volume flow at 80 % vacuum [Nl/min]	Lifting force at 80 % vacuum [N]	Cycle time (extend-suction-lift) [s]	Operating temperature [°C (°F)]	Weight [g]
55.000	17	15	3	0.3	5 - 80 (41 - 176)	39
55.001	25	35	7	0.4	5 - 80 (41 - 176)	111
55.002	30	35	50	1.4	5 - 80 (41 - 176)	331
55.004	40	35	7	0.8	5 - 80 (41 - 176)	138

Dimensions

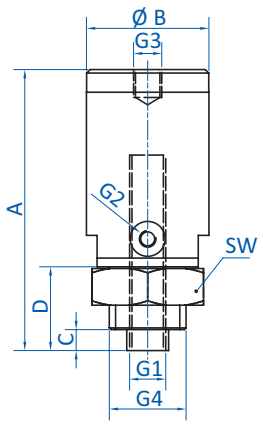

55.000 | 55.001 | 55.004

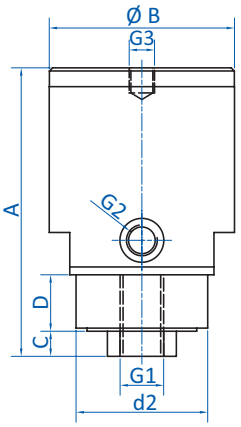

55.002

Item no.	G1	G2	G3	G4	A [mm]	Ø B [mm]	C [mm]	D [mm]	d2 [mm]	SW
55.000	M5	M5	M6	M16x1.5	55.5	24	4	16	--	19
55.001	G1/8	M5	M8	M22x1.5	78	35	6	22	--	27
55.002	G1/4	G1/4	M10	--	92	59	8	18	42	--
55.004	G1/8	G1/8	M8	M22x1.5	99	35	9	24	--	27

info@hidrafluid.es
976 24 32 10

Diagrams

> Double stroke lifting time against weight

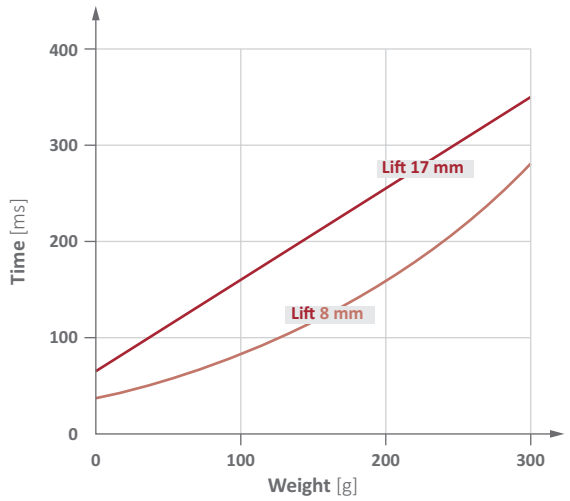

55.000

> Double stroke lifting time against weight

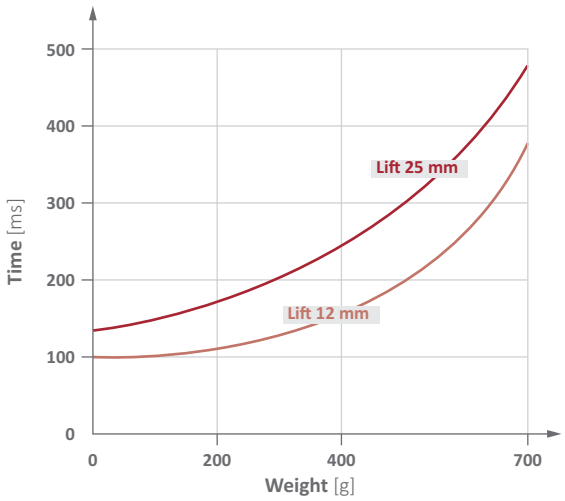

55.001

> Double stroke lifting time against weight

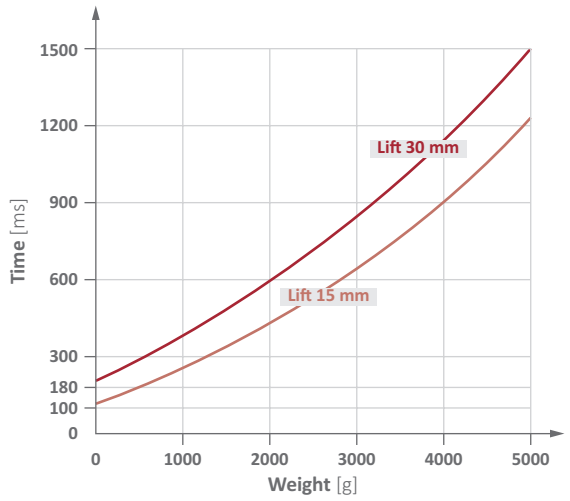

55.002

> Double stroke lifting time against weight

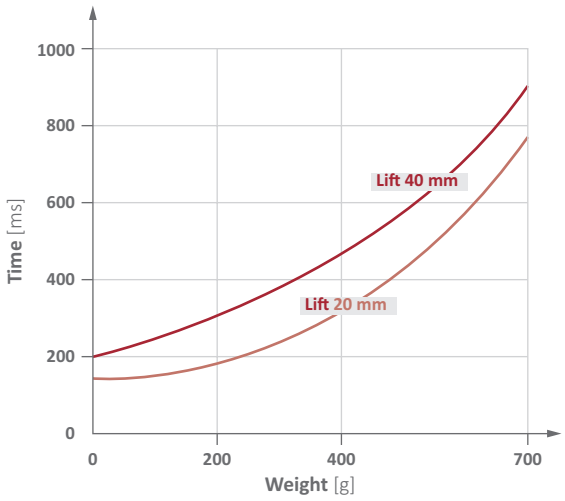

55.004

info@hidrafluid.es
976 24 32 10

Short stroke cylinders – double-acting

Product notes

> Elements to guide gripper components such as vacuum cups to the workpiece
> Double-acting, separate compressed air connections for extraction and rectraction
> Medium: filtered and oiled/unoiled air
> Sensors for optional detection of piston position (extracted/retracted)
> Screws and lock washers included in scope of delivery
> Further stroke versions available on request
> PNP and NPN sensors:
  - C-slot (90° angle): GR04.202P, GR04.202N
  - C-slot (straight, short design): GR04.280P, GR04.280N
> Can be used as gripper tool when combined with pressure plates GR07.196 - GR07.199

Technical data

Item no.	Com-pressed air connection	Operating pressure [bar (psi)]	Piston diameter [mm]	Stroke [mm]	Operating temperature [°C (°F)]	Weight [g]	Accessories
GR07.012-5	M5	0.5 - 9.9 (7.3 - 143.6)	12	5	-5 - 60 (23 - 140)	8	
GR07.012-10	M5	0.5 - 9.9 (7.3 - 143.6)	12	10	-5 - 60 (23 - 140)	9	
GR07.016-5	M5	0.5 - 9.9 (7.3 - 143.6)	16	5	-5 - 60 (23 - 140)	16	
GR07.016-10	M5	0.5 - 9.9 (7.3 - 143.6)	16	10	-5 - 60 (23 - 140)	18	
GR07.016-20	M5	0.5 - 9.9 (7.3 - 143.6)	16	20	-5 - 60 (23 - 140)	22	
GR07.016-30	M5	0.5 - 9.9 (7.3 - 143.6)	16	30	-5 - 60 (23 - 140)	26	
GR07.020-5	M5	0.5 - 9.9 (7.3 - 143.6)	20	5	-5 - 60 (23 - 140)	28	
GR07.020-10	M5	0.5 - 9.9 (7.3 - 143.6)	20	10	-5 - 60 (23 - 140)	31	
GR07.020-20	M5	0.5 - 9.9 (7.3 - 143.6)	20	20	-5 - 60 (23 - 140)	37	Mounting bracket: GR07.002 (p.351)
GR07.020-30	M5	0.5 - 9.9 (7.3 - 143.6)	20	30	-5 - 60 (23 - 140)	44	Sensor: GR04.202N (p.404)
GR07.020-50	M5	0.5 - 9.9 (7.3 - 143.6)	20	50	-5 - 60 (23 - 140)	56	Sensor: GR04.202P (p.404)
GR07.025-5	M5	0.5 - 9.9 (7.3 - 143.6)	25	5	-5 - 60 (23 - 140)	44	Sensor: GR04.280N (p.404)
GR07.025-10	M5	0.5 - 9.9 (7.3 - 143.6)	25	10	-5 - 60 (23 - 140)	48	Sensor: GR04.280P (p.404)
GR07.025-20	M5	0.5 - 9.9 (7.3 - 143.6)	25	20	-5 - 60 (23 - 140)	57	
GR07.025-30	M5	0.5 - 9.9 (7.3 - 143.6)	25	30	-5 - 60 (23 - 140)	66	
GR07.025-50	M5	0.5 - 9.9 (7.3 - 143.6)	25	50	-5 - 60 (23 - 140)	84	
GR07.032-5	G1/8	0.5 - 9.9 (7.3 - 143.6)	32	5	-5 - 60 (23 - 140)	78	
GR07.032-10	G1/8	0.5 - 9.9 (7.3 - 143.6)	32	10	-5 - 60 (23 - 140)	86	
GR07.032-20	G1/8	0.5 - 9.9 (7.3 - 143.6)	32	20	-5 - 60 (23 - 140)	105	
GR07.032-30	G1/8	0.5 - 9.9 (7.3 - 143.6)	32	30	-5 - 60 (23 - 140)	117	
GR07.032-50	G1/8	0.5 - 9.9 (7.3 - 143.6)	32	50	-5 - 60 (23 - 140)	125	

FIPA challenge accepted
info@hidrafluid.es
976 24 32 10

Dimensions

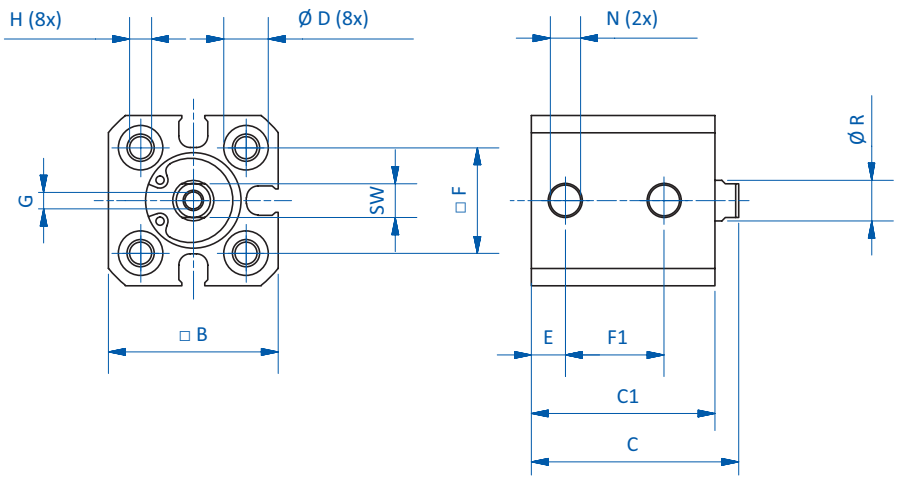

Item no.	□ B [mm]	C [mm]	C1 [mm]	Ø D [mm]	E [mm]	□ F [mm]	F1 [mm]	G	H	SW	L [mm]	N	Ø R [mm]
GR07.012-5	25	30.5	27	6.5x4	5	15.5	14.5	M3x6	M4x7	5	--	M5	6
GR07.012-10	25	35.5	32	6.5x4	5	15.5	19.5	M3x6	M4x7	5	--	M5	6
GR07.016-5	29	30.5	27	6.5x4	5	20	14.5	M4x8	M4x7	6	--	M5	8
GR07.016-10	29	35.5	32	6.5x4	5	20	19.5	M4x8	M4x7	6	--	M5	8
GR07.016-20	29	45.5	42	6.5x4	5	20	29.5	M4x8	M4x7	6	--	M5	8
GR07.016-30	29	55.5	52	6.5x4	5	20	39.5	M4x8	M4x7	6	--	M5	8
GR07.020-5	36	39	34.5	9x7	5.5	25.5	20	M5x7	M6x10	8	--	M5	10
GR07.020-10	36	44	39.5	9x7	5.5	25.5	25	M5x7	M6x10	8	--	M5	10
GR07.020-20	36	54	49.5	9x7	5.5	25.5	35	M5x7	M6x10	8	--	M5	10
GR07.020-30	36	64	59.5	9x7	5.5	25.5	45	M5x7	M6x10	8	--	M5	10
GR07.020-50	36	84	79.5	9x7	5.5	25.5	65	M5x7	M6x10	8	--	M5	10
GR07.025-5	40	42.5	37.5	9x7	5.5	28	21	M6x12	M6x10	10	--	M5	12
GR07.025-10	40	47.5	42.5	9x7	5.5	28	26	M6x12	M6x10	10	--	M5	12
GR07.025-20	40	57.5	52.5	9x7	5.5	28	36	M6x12	M6x10	10	--	M5	12
GR07.025-30	40	67.5	62.5	9x7	5.5	28	46	M6x12	M6x10	10	--	M5	12
GR07.025-50	40	87.5	82.5	9x7	5.5	28	66	M6x12	M6x10	10	--	M5	12
GR07.032-5	45	45	38	9x7	7.5	34	20	M8x13	M6x10	14	7	G1/8	16
GR07.032-10	45	50	43	9x7	7.5	34	25	M8x13	M6x10	14	7	G1/8	16
GR07.032-20	45	60	53	9x7	7.5	34	35	M8x13	M6x10	14	7	G1/8	16
GR07.032-30	45	70	63	9x7	7.5	34	45	M8x13	M6x10	14	7	G1/8	16
GR07.032-50	45	90	83	9x7	7.5	34	65	M8x13	M6x10	14	7	G1/8	16

info@hidrafluid.es
976 24 32 10

Dual-piston cylinders – double-acting

HIGH PRECISION CYLINDER GUIDING, ANTI-TWIST PROTECTION

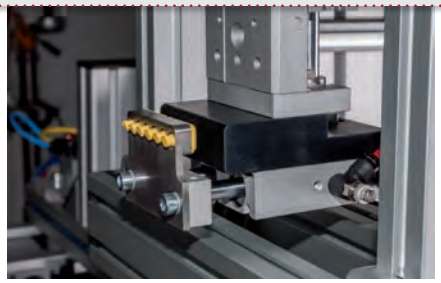

Combination of dual-piston cylinder and guide block

Product notes

> Unit to precisely guide gripper components such as vacuum cups to the workpiece
> Double-acting, separate compressed air connections for extraction and rectraction
> Sensors for optional detection of piston position (extracted/retracted)
> PNP and NPN sensors:
  - C-slot (90° angle): GR04.202P, GR04.202N
  - C-slot (straight, short design): GR04.280P, GR04.280N
> Medium: filtered and oiled/unoiled air

Technical data

Item no.	GR07.112-25	GR07.112-50	GR07.112-75	GR07.116-25	GR07.116-50	GR07.116-75	GR07.116-100
Compressed air connection	M5	M5	M5	M5	M5	M5	M5
Operating pressure [bar (psi)]	1 - 7 (14.5 - 101.5)	1 - 7 (14.5 - 101.5)	1 - 7 (14.5 - 101.5)	1 - 7 (14.5 - 101.5)	1 - 7 (14.5 - 101.5)	1 - 7 (14.5 - 101.5)	1 - 7 (14.5 - 101.5)
Piston diameter [mm]	12	12	12	16	16	16	16
Stroke [mm]	25	50	75	25	50	75	100
Operating temperature [°C (°F)]	-5 - 70 (23 - 158)	-5 - 70 (23 - 158)	-5 - 70 (23 - 158)	-5 - 70 (23 - 158)	-5 - 70 (23 - 158)	-5 - 70 (23 - 158)	-5 - 70 (23 - 158)
Weight [g]	180	230	280	290	360	435	510
Suitable sensors	GR04.202N (p.404) GR04.202P (p.404) GR04.280N (p.404) GR04.280P (p.404)	GR04.202N (p.404) GR04.202P (p.404) GR04.280N (p.404) GR04.280P (p.404)	GR04.202N (p.404) GR04.202P (p.404) GR04.280N (p.404) GR04.280P (p.404)	GR04.202N (p.404) GR04.202P (p.404) GR04.280N (p.404) GR04.280P (p.404)	--	GR04.202N (p.404) GR04.202P (p.404) GR04.280N (p.404) GR04.280P (p.404)	GR04.202N (p.404) GR04.202P (p.404) GR04.280N (p.404) GR04.280P (p.404)

Theoretical cylinder force depending on the working pressure

	Cylinder force [N]			
	GR07.112-xx		GR07.116-xx	
Working pressure [bar]	Move out	Move in	Move out	Move in
1	16	10	35.5	25
1.5	23.5	15	53	38
2	31.5	20	70.5	50.5
3	47	30	106	75.5
4	63	40	141	101
5	78.5	50	176.5	126
6	94	60	212	151
7	110	70	247	176.5

FIPA challenge accepted
info@hidrafluid.es
976 24 32 10

Dimensions

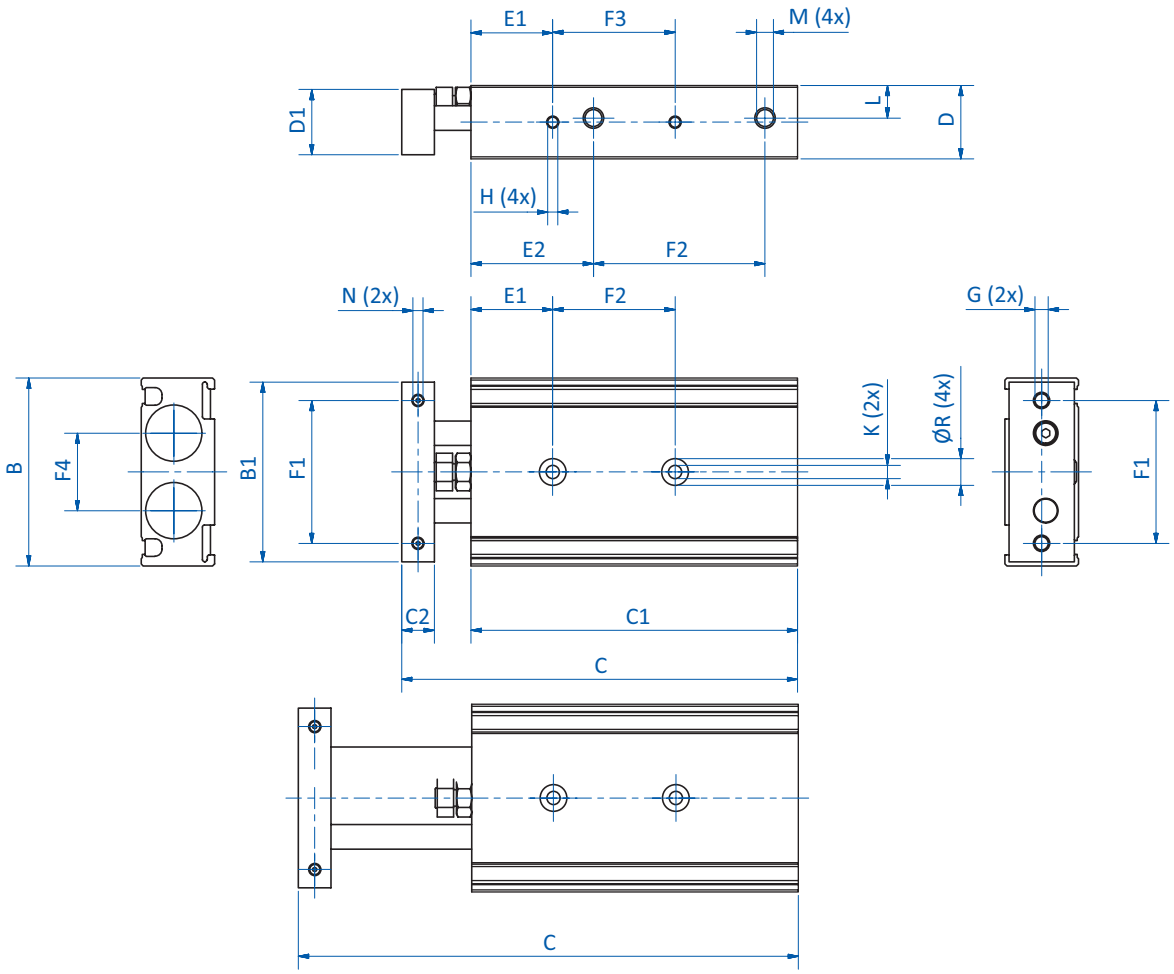

① = Compressed air connection M5

Item no.	GR07.112-25	GR07.112-50	GR07.112-75	GR07.116-25	GR07.116-50	GR07.116-75	GR07.116-100
L [mm]	8.5	8.5	8.5	9.5	9.5	9.5	9.5
B [mm]	46	46	46	58	58	58	58
B1 [mm]	44	44	44	58	58	58	58
C [mm]	97 - 122	122 - 172	147 - 222	104 - 129	129 - 179	154 - 229	179 - 279
C1 [mm]	80	105	130	85	110	135	160
C2 [mm]	8	8	8	10	10	10	10
D [mm]	18	18	18	20	20	20	20
D1 [mm]	16	16	16	18	18	18	18
E1 [mm]	20	20	20	30	30	30	30
E2 [mm]	30	30	30	38.5	38.5	38.5	38.5
F1 [mm]	35	35	35	45	45	45	45
F2 [mm]	42	67	92	38.5	63.5	88.5	114
F3 [mm]	30	40	50	25	35	45	55
F4 [mm]	19	19	19	25	25	25	25
G	M4x0.7	M4x0.7	M4x0.7	M5x0.8	M5x0.8	M5x0.8	M5x0.8
H	M3x4,5	M3x4,5	M3x4,5	M4x5	M4x5	M4x5	M4x5
K	M4	M4	M4	M5	M5	M5	M5
M	M5	M5	M5	M5	M5	M5	M5
N	M3x5	M3x5	M3x5	M4x6	M4x6	M4x6	M4x6
Ø R	6,5x3,3	6,5x3,3	6,5x3,3	8x4,4	8x4,4	8x4,4	8x4,4

info@hidrafluid.es
976 24 32 10

Guide blocks piston diameter 8 mm – double-acting

HIGH PRECISION COMBINATION OF CYLINDER AND LINEAR GUIDING

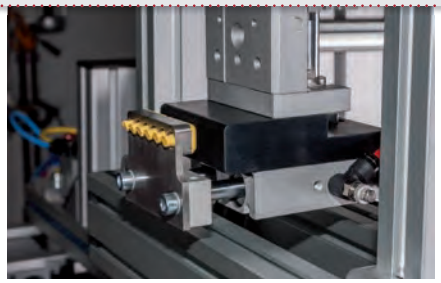

Combination of guide block and dual-piston cylinder

Product notes

> Unit to precisely guide gripper components such as sprue grippers or nippers to the workpiece
> Double-acting, separate compressed air connections for extraction and rectraction
> Sensors for optional detection of piston position (extracted/retracted)
> Stroke adjusters available on request
> Linear guide blocks can also be used to move gripped workpieces more closely together, to prepare the items for example for pick & place by vacuum grippers
> PNP and NPN sensors:
- C-slot (90° angle): GR04.202P, GR04.202N
- C-slot (straight, short design): GR04.280P, GR04.280N

Technical data

Item no.	**GR07.208-30**	**GR07.208-50**	**GR07.208-75**
Compressed air connection	2xM5	2xM5	2xM5
Operating pressure [bar (psi)]	1.5 - 7 (21.8 - 101.5)	1.5 - 7 (21.8 - 101.5)	1.5 - 7 (21.8 - 101.5)
Piston diameter [mm]	8	8	8
Stroke [mm]	30	50	75
Medium	Filtered and oiled/unoiled air	Filtered and oiled/unoiled air	Filtered and oiled/unoiled air
Operating temperature [°C (°F)]	-5 - 60 (23 - 140)	-5 - 60 (23 - 140)	-5 - 60 (23 - 140)
Weight [g]	190	285	410
Suitable sensors	GR04.202N (p.404) GR04.202P (p.404) GR04.280N (p.404) GR04.280P (p.404)	GR04.202N (p.404) GR04.202P (p.404) GR04.280N (p.404) GR04.280P (p.404)	GR04.202N (p.404) GR04.202P (p.404) GR04.280N (p.404) GR04.280P (p.404)

Theoretical cylinder force depending on the working pressure

	Cylinder force [N]					
	GR07.208-xx		**GR07.216-xx**		**GR07.220-xx**	
Working pressure [bar]	Move out	Move in	Move out	Move in	Move out	Move in
2	20	15	80	60	126	94
3	30	23	121	91	188	141
4	40	30	161	121	251	188
5	51	38	201	151	314	236
6	61	45	241	181	377	283
7	71	53	281	211	400	330
Effective piston surface [mm²]	101	75	402	302	628	471

FIPA challenge accepted

info@hidrafluid.es
976 24 32 10

Dimensions

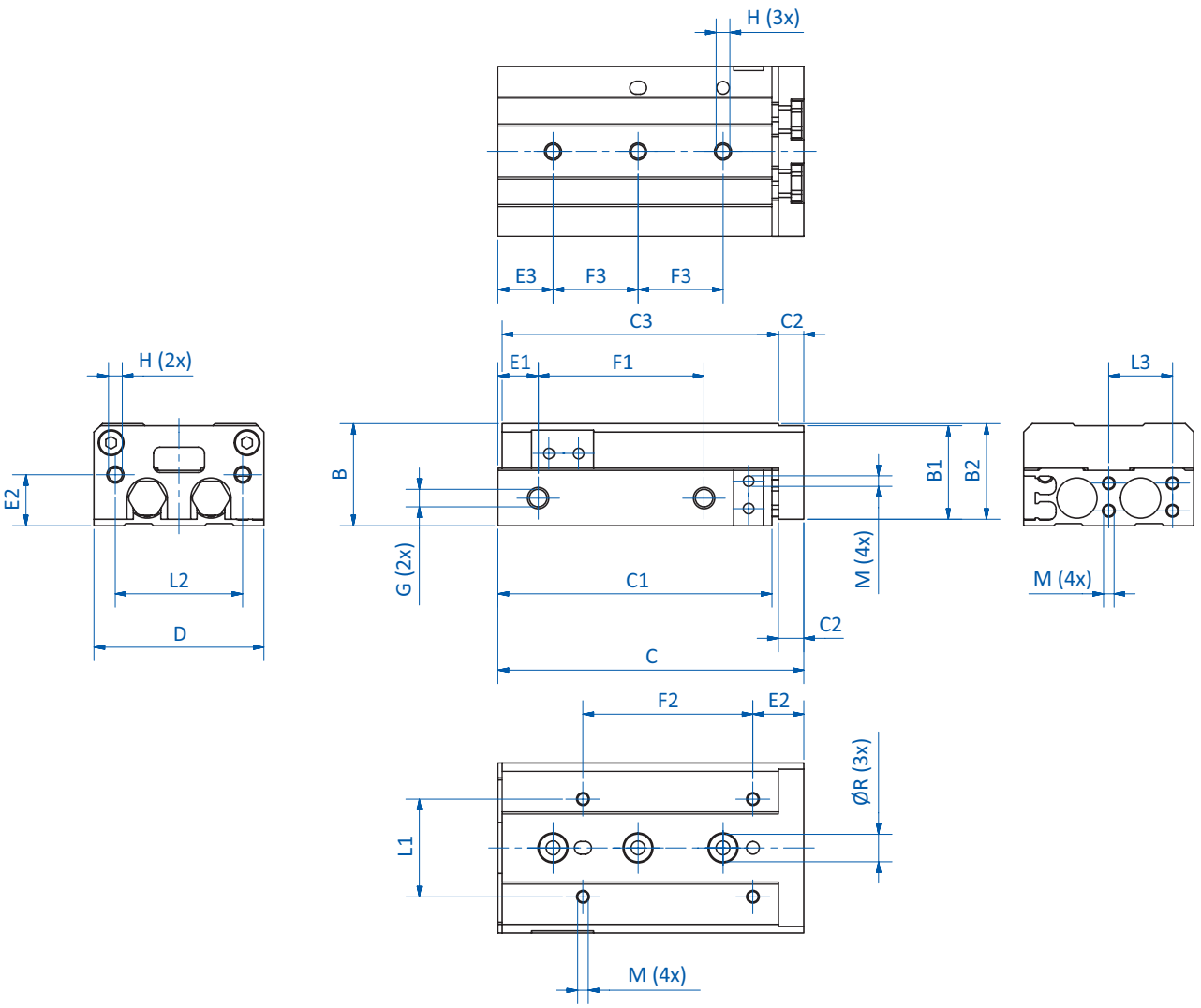

Continued on the next page

info@hidrafluid.es
976 24 32 10

Item no.	GR07.208-30	GR07.208-50	GR07.208-75
B [mm]	24	24	24
B1 [mm]	22	22	22
B2 [mm]	22.5	22.5	22.5
C [mm]	72 - 102	108 - 158	158 - 233
C1 [mm]	64.5	100.5	150.5
C2 [mm]	6	6	6
C3 [mm]	65	101	151
D [mm]	40	40	40
E1 [mm]	9.5	24.5	38.5
E2 [mm]	12	12	12
E3 [mm]	13	20	27
F1 [mm]	39	60	96
F2 [mm]	40	38	50
F3 [mm]	20	23	28
G	M5	M5	M5
H	M4x8	M4x8	M4x8
L1 [mm]	23	23	23
L2 [mm]	30	30	30
L3 [mm]	15	15	15
M	M3x4	M3x4	M3x4
N	--	--	--
Ø R [mm]	7	7	7

info@hidrafluid.es
976 24 32 10

Guide blocks piston diameter 16 & 20 mm – double-acting

HIGH PRECISION COMBINATION OF CYLINDER AND LINEAR GUIDING

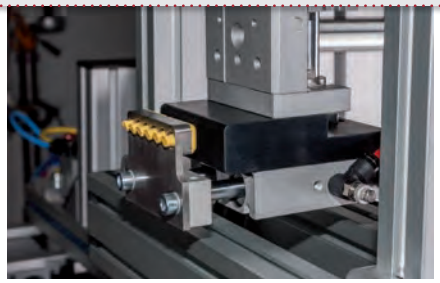

Combination of guide block and dual-piston cylinder

Product notes

> Unit to precisely guide gripper components such as sprue grippers or nippers to the workpiece
> Double-acting, separate compressed air connections for extraction and rectraction
> Sensors for optional detection of piston position (extracted/retracted)
> Stroke adjusters available on request
> Linear guide blocks can also be used to move gripped workpieces more closely together, to prepare the items for example for pick & place by vacuum grippers
> PNP and NPN sensors:
- C-slot (90° angle): GR04.202P, GR04.202N
- C-slot (straight, short design): GR04.280P, GR04.280N

Technical data

Item no.	GR07.216-30	GR07.216-50	GR07.216-75	GR07.216-100	GR07.220-10	GR07.220-30	GR07.220-50	GR07.220-75	GR07.220-100	GR07.220-125	GR07.220-150
Compressed air connection	2xM5	2xM5	2xM5	2xM5	2xG1/8	2xG1/8	2xG1/8	2xG1/8	2xG1/8	2xG1/8	2xG1/8
Operating pressure [bar (psi)]	1.5 - 7 (21.8 - 101.5)	1.5 - 7 (21.8 - 101.5)	1.5 - 7 (21.8 - 101.5)	1.5 - 7 (21.8 - 101.5)	1.5 - 7 (21.8 - 101.5)	1.5 - 7 (21.8 - 101.5)	1.5 - 7 (21.8 - 101.5)	1.5 - 7 (21.8 - 101.5)	1.5 - 7 (21.8 - 101.5)	1.5 - 7 (21.8 - 101.5)	1.5 - 7 (21.8 - 101.5)
Piston diameter [mm]	16	16	16	16	20	20	20	20	20	20	20
Stroke [mm]	30	50	75	100	10	30	50	75	100	125	150
Medium	Filtered and oiled/ unoiled air	Filtered and oiled/ unoiled air	Filtered and oiled/ unoiled air	Filtered and oiled/ unoiled air	Filtered and oiled/ unoiled air	Filtered and oiled/ unoiled air	Filtered and oiled/ unoiled air	Filtered and oiled/ unoiled air	Filtered and oiled/ unoiled air	Filtered and oiled/ unoiled air	Filtered and oiled/ unoiled air
Operating temperature [°C (°F)]	-5 - 60 (23 - 140)	-5 - 60 (23 - 140)	-5 - 60 (23 - 140)	-5 - 60 (23 - 140)	-5 - 60 (23 - 140)	-5 - 60 (23 - 140)	-5 - 60 (23 - 140)	-5 - 60 (23 - 140)	-5 - 60 (23 - 140)	-5 - 60 (23 - 140)	-5 - 60 (23 - 140)
Weight [g]	602	762	1,095	1,410	1,010	1,010	1,250	1,630	2,150	2,670	3,190
Suitable sensors	GR04.202N (p.404) GR04.202P (p.404) GR04.280N (p.404) GR04.280P (p.404)										

Continued on the next page

info@hidrafluid.es
976 24 32 10

Theoretical cylinder force depending on the working pressure

	Cylinder force [N]					
	GR07.208-xx		GR07.216-xx		GR07.220-xx	
Working pressure [bar]	Move out	Move in	Move out	Move in	Move out	Move in
2	20	15	80	60	126	94
3	30	23	121	91	188	141
4	40	30	161	121	251	188
5	51	38	201	151	314	236
6	61	45	241	181	377	283
7	71	53	281	211	400	330
Effective piston surface [mm²]	101	75	402	302	628	471

Dimensions

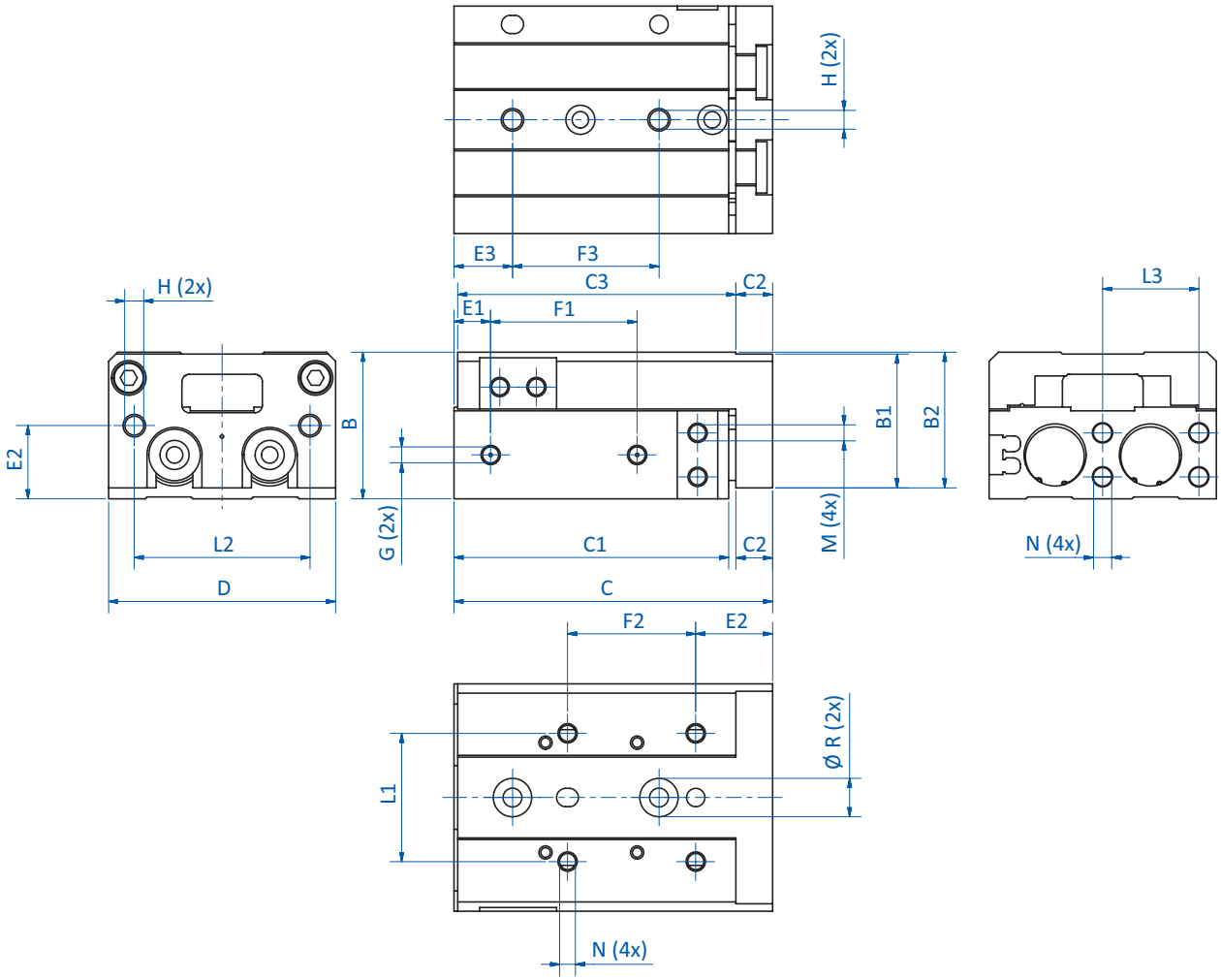

FIPA challenge accepted
info@hidrafluid.es
976 24 32 10

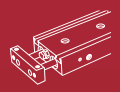

Item no.	GR07.216-30	GR07.216-50	GR07.216-75	GR07.216-100	GR07.220-10	GR07.220-30	GR07.220-50	GR07.220-75	GR07.220-100	GR07.220-125	GR07.220-150
B [mm]	40	40	40	40	50	50	50	50	50	50	50
B1 [mm]	36.5	36.5	36.5	36.5	45.5	45.5	45.5	45.5	45.5	45.5	45.5
B2 [mm]	37	37	37	37	46	46	46	46	46	46	46
C [mm]	87 - 117	112 - 162	162 - 237	210 - 310	97 - 107	97 - 107	122 - 172	161 - 236	214 - 314	268 - 393	320 - 304.5
C1 [mm]	75	100	150	198	81.5	81.5	106.5	145.5	198.5	252.2	304.5
C2 [mm]	10	10	10	10	13	13	13	13	13	13	13
C3 [mm]	76	101	151	199	83	83	108	147	200	254	306
D [mm]	62	62	62	62	76	76	76	76	76	76	76
E1 [mm]	10	15	40	55	10	10	10	10	58	70	87
E2 [mm]	20 - 21	20 - 21	20 - 21	20 - 21	25 - 27	25 - 27	25 - 27	25 - 27	25 - 27	25 - 27	25 - 27
E3 [mm]	16	21	26	39	15	15	15	19	37	41	19
F1 [mm]	40	60	85	118	44	44	69	108	113	155	190
F2 [mm]	35	30	55	65	50	50	35	60	70	70	80
F3 [mm]	40	30	35	35	45	45	35	35	35	38	44
G	M5	M5	M5	M5	G1/8	G1/8	G1/8	G1/8	G1/8	G1/8	G1/8
H	M6x12	M6x12	M6x12	M6x12	M6x12	M6x12	M6x12	M6x12	M6x12	M6x12	M6x12
L1 [mm]	35	35	35	35	46	46	46	46	46	46	46
L2 [mm]	48	48	48	48	58	58	58	58	58	58	58
L3 [mm]	26	26	26	26	30 (2x)	30 (2x)	30 (2x)	30 (2x)	30 (2x)	30 (2x)	30 (2x)
M	M5x5,5	M5x5,5	M5x5,5	M5x5,5	M6x6,5	M6x6,5	M6x6,5	M6x6,5	M6x6,5	M6x6,5	M6x6,5
N	M5x7	M5x7	M5x7	M5x7	M5x8 (6x)	M5x8 (6x)	M5x8 (6x)	M5x8 (6x)	M5x8 (6x)	M5x8 (6x)	M5x8 (6x)
Ø R [mm]	10.5	10.5	10.5	10.5	11	11	11	11	11	11	11

info@hidrafluid.es
976 24 32 10

Guide blocks, extra narrow design – double-acting

Product notes

> Unit to precisely guide gripper components such as sprue grippers or nippers to the workpiece
> Extra narrow construction for space-saving assembly
> Optional position monitoring through detection of piston position
> Principle of operation: double-acting
> Extension cables for sensors:
- 20.503: 3-pole M8, straight, length 2,500 mm, open wire
- 20.507: 3-pole M8, straight, length 2,000 mm, open wire
- 20.570: 3-pole M8, length 1,500 mm, end with plug 3-pole M8
> PNP and NPN sensors:
- C-slot (90° angle): GR04.202P, GR04.202N
- C-slot (straight, short design): GR04.280P, GR04.280N

Other strokes available on request

Technical data

Item no.	Operating pressure [bar (psi)]	Piston diameter [mm]	Stroke [mm]	Piston speed [mm/sec]	Operating temperature [°C (°F)]	Weight [g]	Accessories
GR07.506-10	1.2 - 7 (17.4 - 101.5)	6	10	50 - 500	-5 - 60 (23 - 140)	70	
GR07.506-20	1.2 - 7 (17.4 - 101.5)	6	20	50 - 500	-5 - 60 (23 - 140)	80	
GR07.506-30	1.2 - 7 (17.4 - 101.5)	6	30	50 - 500	-5 - 60 (23 - 140)	100	Sensor: GR04.202N (p.404)
GR07.510-10	1.2 - 7 (17.4 - 101.5)	10	10	50 - 500	-5 - 60 (23 - 140)	125	Sensor: GR04.202P (p.404)
GR07.510-20	1.2 - 7 (17.4 - 101.5)	10	20	50 - 500	-5 - 60 (23 - 140)	150	Sensor: GR04.280N (p.404)
GR07.510-30	1.2 - 7 (17.4 - 101.5)	10	30	50 - 500	-5 - 60 (23 - 140)	170	Sensor: GR04.280P (p.404)
GR07.516-10	1.2 - 7 (17.4 - 101.5)	16	10	50 - 500	-5 - 60 (23 - 140)	230	Connector cable: 20.503 (p.410)
GR07.516-20	1.2 - 7 (17.4 - 101.5)	16	20	50 - 500	-5 - 60 (23 - 140)	260	Connector cable: 20.507 (p.410)
GR07.516-30	1.2 - 7 (17.4 - 101.5)	16	30	50 - 500	-5 - 60 (23 - 140)	290	Connector cable: 20.570 (p.410)

info@hidrafluid.es
976 24 32 10

Dimensions

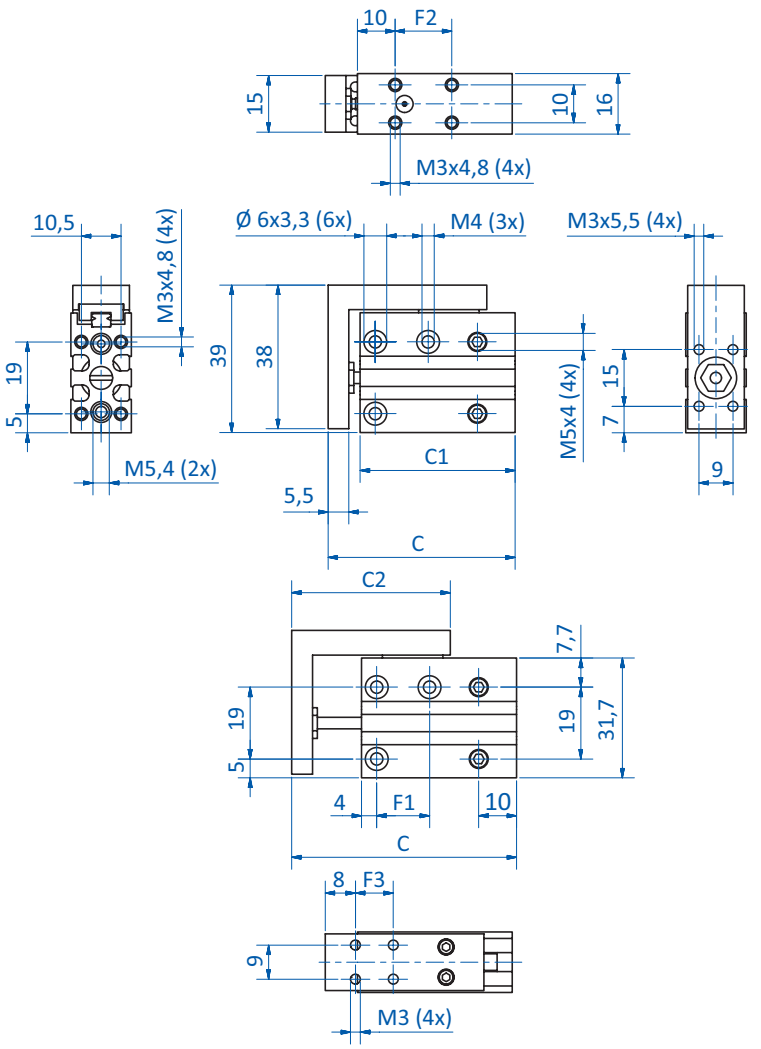

GR07.506-10 | GR07.506-20 | GR07.506-30

Continued on the next page

info@hidrafluid.es
976 24 32 10

Dimensions

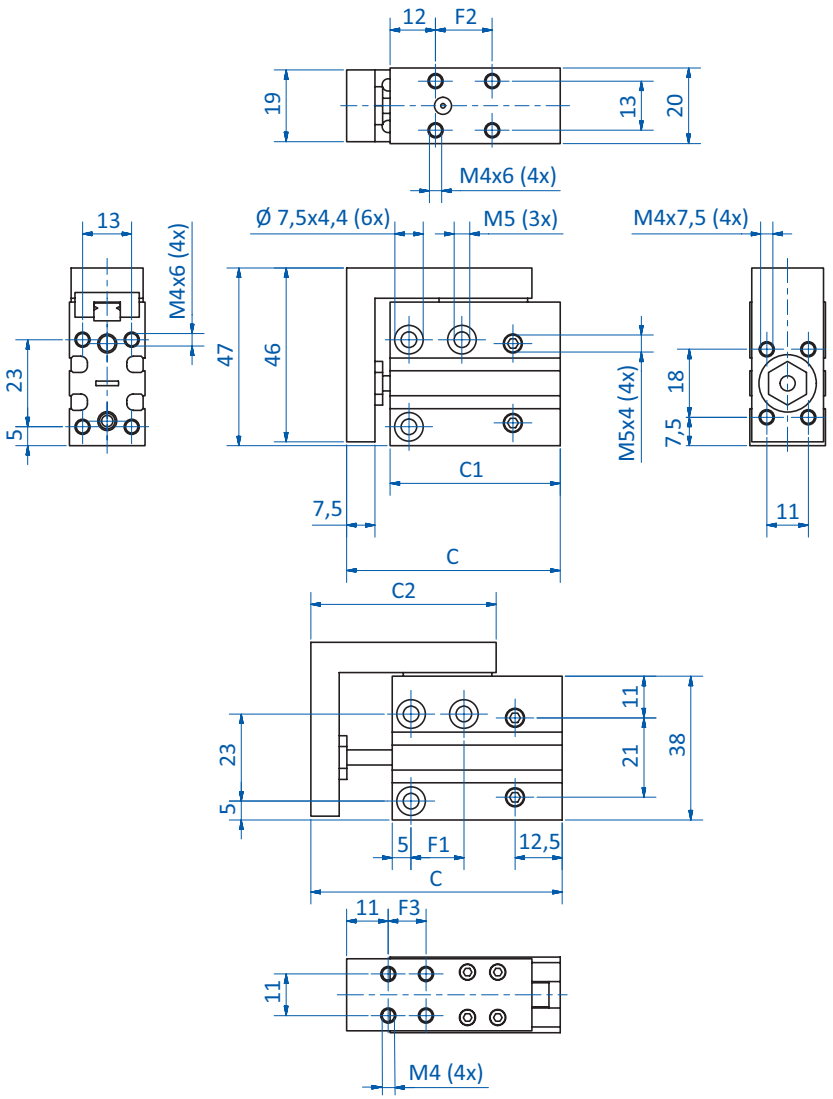

GR07.510-10 | GR07.510-20 | GR07.510-30

FIPA challenge accepted
info@hidrafluid.es
976 24 32 10

Dimensions

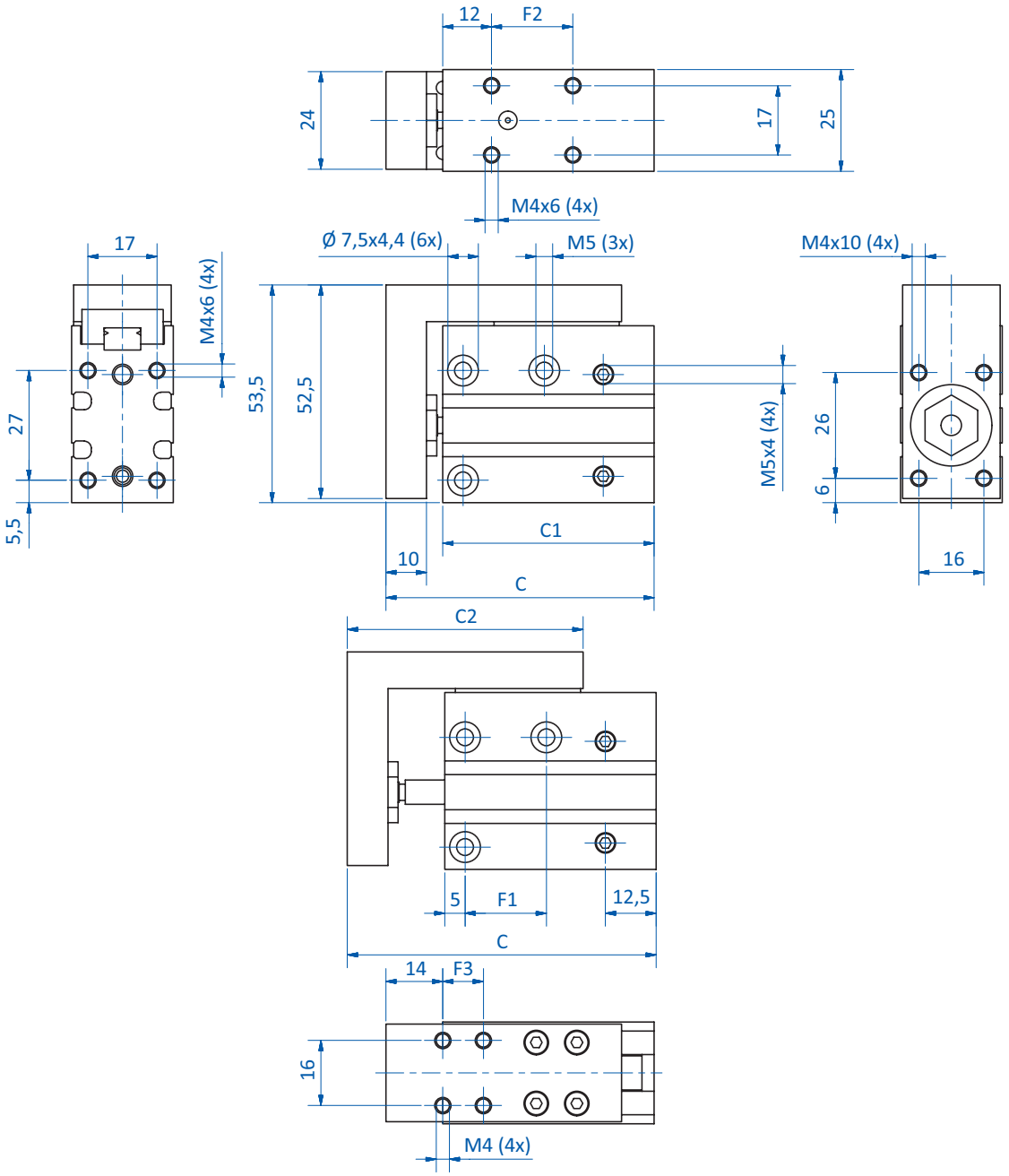

GR07.516-10 | GR07.516-20 | GR07.516-30

Item no.	**C** [mm]	**C1** [mm]	**C2** [mm]	**F1** [mm]	**F2** [mm]	**F3** [mm]
GR07.506-10	49.5 - 59.5	41	42	14	15	10
GR07.506-20	51 - 52	51	52	24	25	20
GR07.506-30	69.5 - 99.5	61	62	30	35	30
GR07.510-10	56.5 - 66.5	45	49	14	15	10
GR07.510-20	66.5 - 86.5	55	59	24	25	20
GR07.510-30	76.5 - 106.5	65	69	30	35	30
GR07.516-10	66 - 76	52	58	20	20	10
GR07.516-20	76 - 96	62	68	30	30	20
GR07.516-30	86 - 116	72	78	40	40	30

info@hidrafluid.es
976 24 32 10

Pressure plates

Product notes

> Pressure plates with threads e.g. for screwing into short lifting cylinders as gripping or holding tools
> GR07.196-198 with grooved natural rubber pad
> GR07.199 with steel cover

Technical data

Item no.	Weight [g]
GR07.196	12
GR07.197	12
GR07.198	7
GR07.199	2

Dimensions

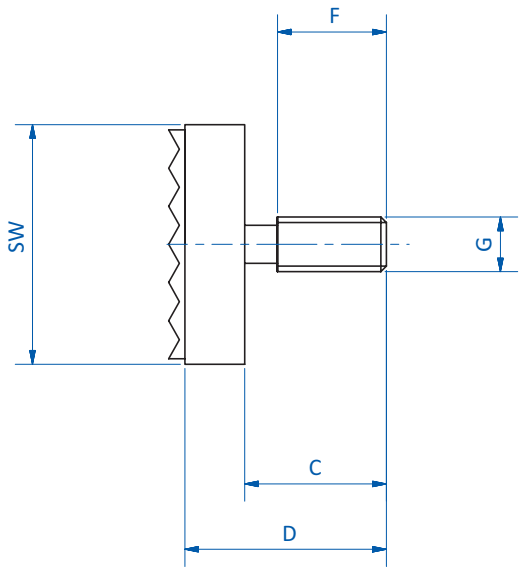

GR07.196 | GR07.197 | GR07.198

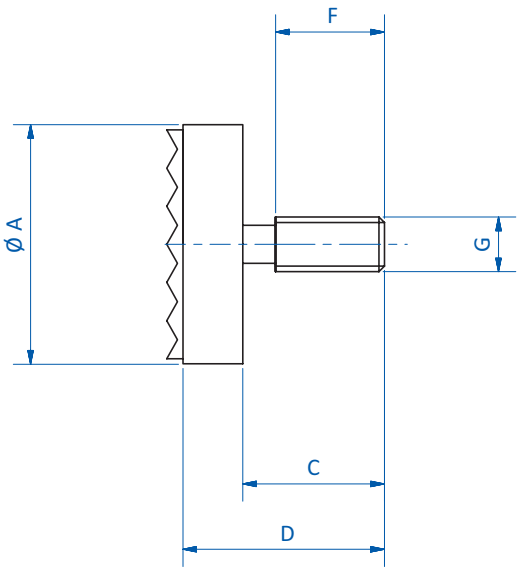

GR07.199

Item no.	SW	Ø A [mm]	C [mm]	D [mm]	F [mm]	G
GR07.196	22	--	13	18.5	10	M5
GR07.197	22	--	11.5	17	8.5	M4
GR07.198	22	--	7	11.7	5	M3
GR07.199	--	12	9	12.3	6	M3

FIPA challenge accepted
info@hidrafluid.es
976 24 32 10

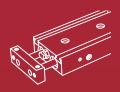

Fittings for compact cylinders

Product notes

> Integration of compact cylinders into gripper systems
> Compatible with all compact cylinders complying with ISO 21287 standards

Technical data

Item no.	Weight [g]
GR07.001	125
GR07.002	52

Dimensions

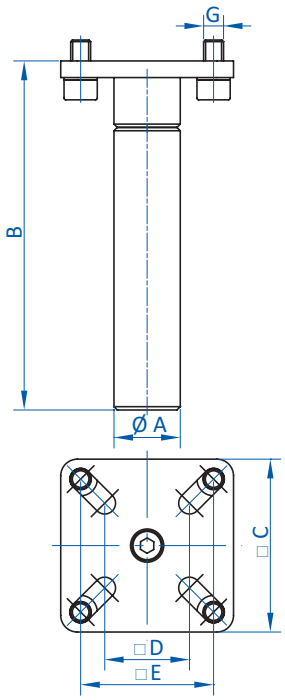

Item no.	Ø **A** [mm]	**B** [mm]	□ **C** [mm]	□ **D** [mm]	□ **E** [mm]	**G**
GR07.001	20	105	52	25.5	40	M6
GR07.002	14	105	29	15.5	20	M4

info@hidrafluid.es
976 24 32 10

Angle arms for compact cylinders – adjustable

Product notes

> Variable mounting of gripper components on compact cylinders or extrusion systems
> Compatible with all compact cylinders (anti-twist) complying with ISO 21287 standards

Technical data

Item no.	Weight [g]
GR07.030	73

Dimensions

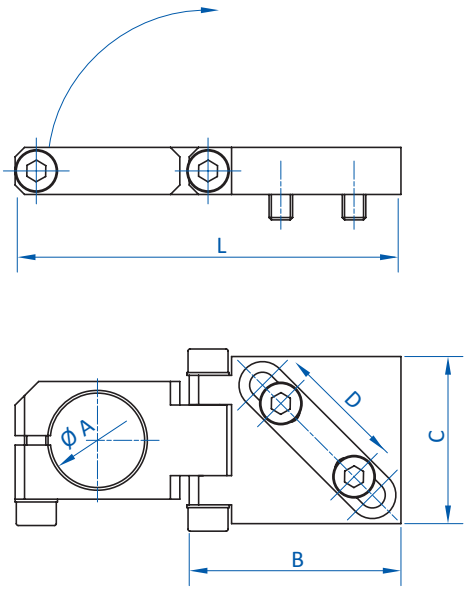

Item no.	Ø A [mm]	B [mm]	C [mm]	D [mm]	L [mm]
GR07.030	20	45	35.5	17 - 33	82

FIPA challenge accepted
info@hidrafluid.es
976 24 32 10

Mounting plate for guide blocks

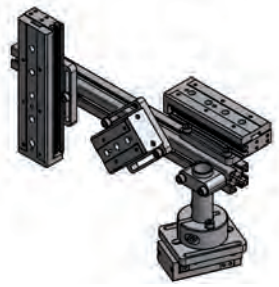

Installation on FIPA MLine extrusion system

Product notes

> Mounting of guide blocks to SLine and MLine extrusions
> GR07.022: suitable for GR07.208 on SLine and MLine extrusion systems
> GR07.024: suitable for GR07.220 on XLine extrusion system
> Slot nuts and screws included in scope of delivery

Technical data

Item no.	Weight [g]
GR07.022	71
GR07.024	266

Dimensions

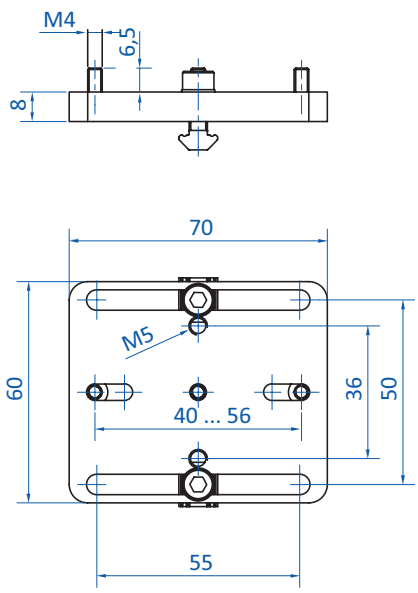

GR07.022

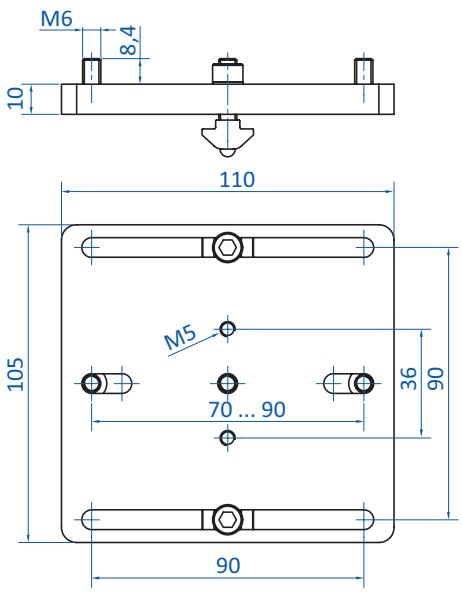

GR07.024

info@hidrafluid.es
976 24 32 10

Mounting ring for linear components

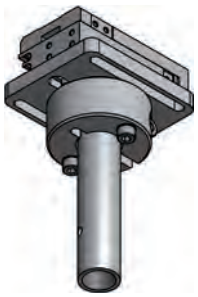

Application example: guide blocks
with mounting ring and mounting plate

Product notes

> Mounting of linear components on extrusion systems via extension tubes with Ø 20 mm clamp
> Particularly suitable for guide blocks rails and dual piston cylinder
> Screws included in scope of delivery

Technical data

Item no.	Weight [g]	Accessories
GR07.021	96	Mounting bracket: GR07.022 (p.353) Mounting bracket: GR07.024 (p.353) Mounting bracket: GR07.026 (p.355) Mounting bracket: GR07.028 (p.355) Extension tube: GR06.022 (p.90) Cross clamp: GR02.022 (p.83) Angle clamp: GR02.013A (p.79)

Dimensions

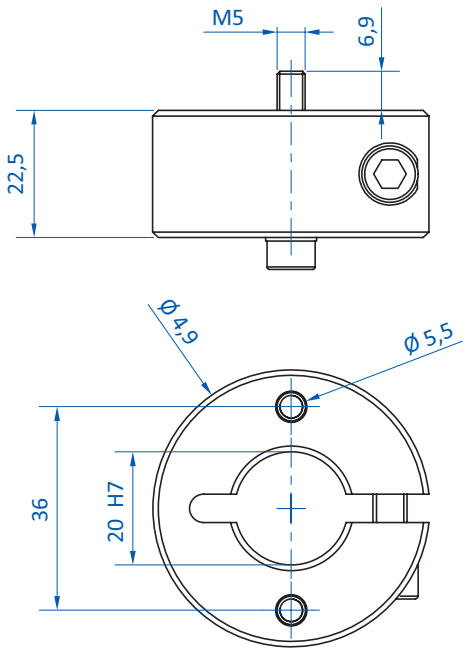

info@hidrafluid.es
976 24 32 10

Mounting plate for dual-piston cylinders

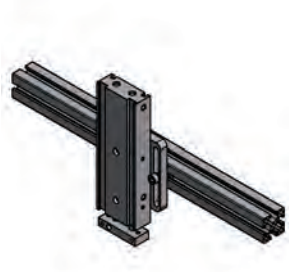

Assembly on FIPA MLine extrusions

Product notes

> Mounting of dual-piston cylinders on SLine and MLine extrusion systems
> Slot nuts and screws included in scope of delivery

Technical data

Item no.	Suitable for	Weight [g]
GR07.026	GR07.110	102
GR07.028	GR07.115	182

Dimensions

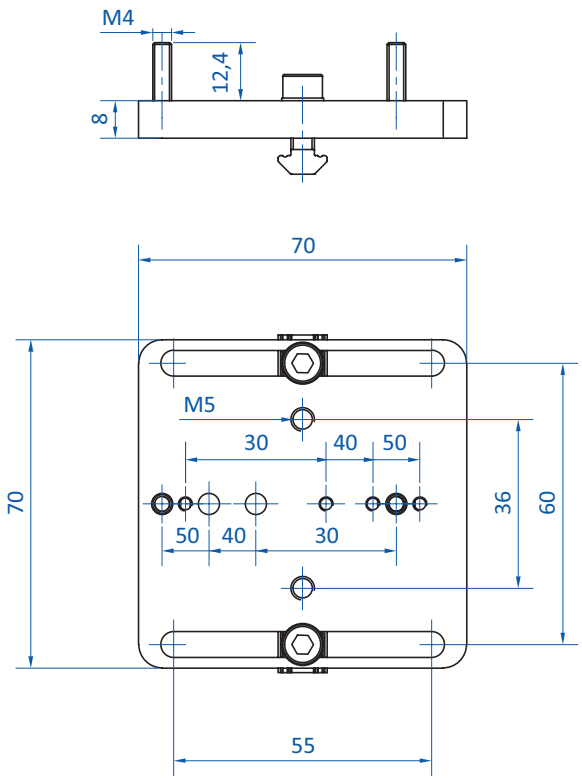

GR07.026

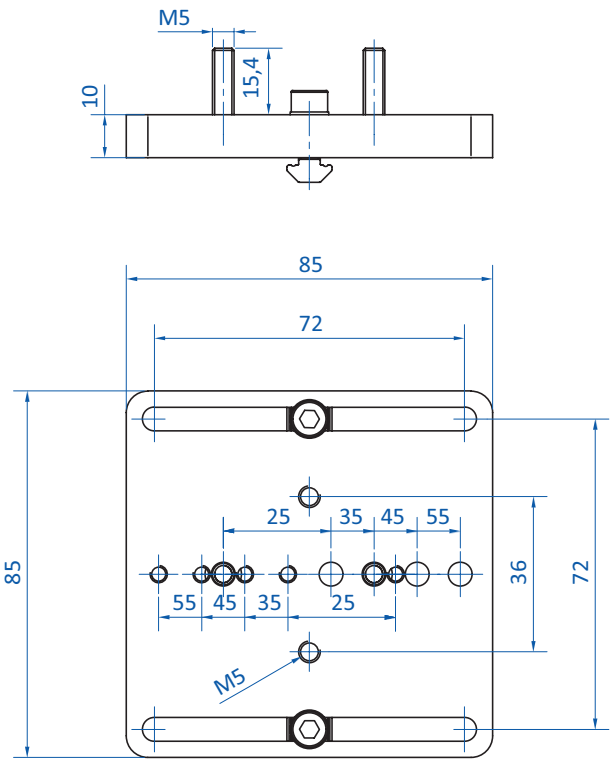

GR07.028

info@hidrafluid.es
976 24 32 10

Notes:

FIPA challenge accepted

info@hidrafluid.es
976 24 32 10

Control technology and system monitoring at a glance 358

Pressure regulators 360

Vacuum filters 364

Valve technology 366

Vacuum/Pressure switches 376

info@hidrafluid.es
976 24 32 10

FIPA Control technology and system monitoring

"Inline" pressure regulators

> Limitation of holding force of grippers
> Defined reduction in operating pressure for ejectors
> Models with integrated gauge (32.582 - 32.586)

> See page 360

Vacuum regulators

> Maintain system vacuum independent of porosity of workpiece and fluctuations of vacuum supply

> See page 362

Vacuum filters

> Retent impurities and liquids taken in the vacuum system for example by vacuum cups or pumps
> Protect vacuum pumps or ejectors from damage or excessive wear

> See page 364

Flow control valves

> Maintain system vacuum by closing non-covered suction openings
> Handling of dense or porous workpieces

> See page 366

FIPA challenge accepted

info@hidrafluid.es
976 24 32 10

FIPA Control technology and system monitoring

Pressure valves

> Control of compressed air circuits
> Optional construction of valve clusters

> See page 367

Vacuum valves

> 2/2-way and 3/2-way valves with short switching times and high flow for fast vacuum build-up
> Optional construction of valve clusters

> See page 371

Vacuum/Pressure switches

> Monitoring of vacuum / compressed air and optimize cycle times and improve gripper system effeciency

Mini vacuum switch 20.040/20.041

> PNP/NPN Outputs
> Hysteresis is fixed
> LED-diode

Vacuum switch 20.021/20.022

> 2 x PNP outputs
> 7-segment LED-display
> Compact, round design (20.022)

> See page 376

Mounting brackets for vacuum switches and pressure switches

> Adapters and mounting brackets for flange assembly, front panel mounting or mounting on extrusions

> See page 380

For additional products please refer to the FIPA Vacuum Technology Catalog.
Our technical customer service will be happy to help you find the optimal products for your application.
(email: info@fipa.com; phone: +49 89 962489-0)

info@hidrafluid.es
976 24 32 10

"Inline" pressure regulators with pressure gauge

Product notes

> Defined reduction in operating pressure for ejectors, limitation of holding force of grippers
> Easy installation thanks to vertical and horizontal cross holes
> Pressure adjustment by means of knurled screw, pressure monitoring by means of gauges (readout in MPa)
> Integrated overpressure protection
> Only suitable for compressed air

Technical data

Item no.	Operating pressure [bar (psi)]	Regulating range [bar (psi)]	Accuracy (±) [%]	Operating temperature [°C (°F)]	Weight [g]
32.582	0 - 9 (0 - 130.5)	1 - 8 (14.5 - 116)	5	0 - 60 (32 - 140)	48
32.583	0 - 9 (0 - 130.5)	1 - 8 (14.5 - 116)	5	0 - 60 (32 - 140)	48
32.584	0 - 9 (0 - 130.5)	1 - 8 (14.5 - 116)	5	0 - 60 (32 - 140)	48
32.585	0 - 9 (0 - 130.5)	1 - 8 (14.5 - 116)	5	0 - 60 (32 - 140)	73
32.586	0 - 9 (0 - 130.5)	1 - 8 (14.5 - 116)	5	0 - 60 (32 - 140)	73

Dimensions

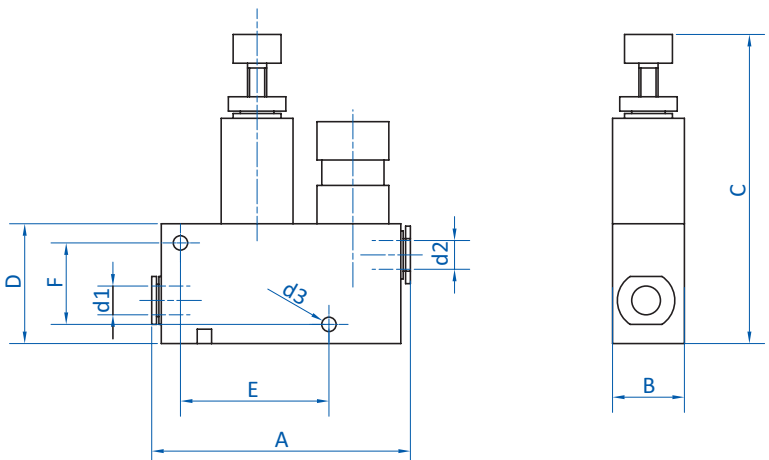

Item no.	d1 [mm]	d2 [mm]	d3 [mm]	A [mm]	B [mm]	C [mm]	D [mm]	E [mm]	F [mm]
32.582	4	4	3.2	55	15	63	25	30	17
32.583	6	4	3.2	55.5	15	63	25	30	17
32.584	6	6	3.2	56	15	63	25	30	17
32.585	8	6	3.2	69	19	67.5	29	39	21
32.586	8	8	3.2	69	19	67.5	29	39	21

FIPA challenge accepted
info@hidrafluid.es
976 24 32 10

"Inline" pressure regulators

Product notes

> Defined reduction in operating pressure for ejectors, limitation of holding force of grippers
> Pressure adjustment by means of knurled screw
> Integrated overpressure protection
> Only suitable for compressed air

Technical data

Item no.	Operating pressure [bar (psi)]	Regulating range [bar (psi)]	Accuracy (±) [%]	Operating temperature [°C (°F)]	Weight [g]
32.577	0 - 9 (0 - 130.5)	1 - 8 (14.5 - 116)	5	0 - 60 (32 - 140)	36
32.578	0 - 9 (0 - 130.5)	1 - 8 (14.5 - 116)	5	0 - 60 (32 - 140)	36
32.579	0 - 9 (0 - 130.5)	1 - 8 (14.5 - 116)	5	0 - 60 (32 - 140)	36
32.580	0 - 9 (0 - 130.5)	1 - 8 (14.5 - 116)	5	0 - 60 (32 - 140)	60
32.581	0 - 9 (0 - 130.5)	1 - 8 (14.5 - 116)	5	0 - 60 (32 - 140)	60

Dimensions

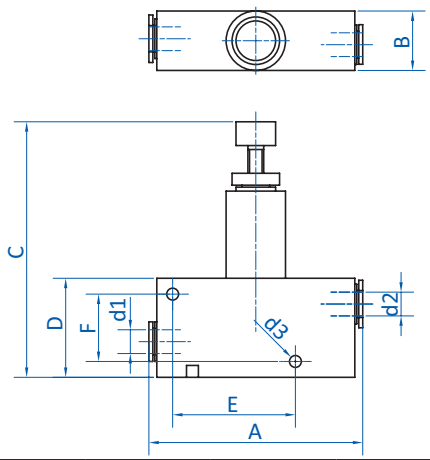

Item no.	d1 [mm]	d2 [mm]	d3 [mm]	A [mm]	B [mm]	C [mm]	D [mm]	E [mm]	F [mm]
32.577	4	4	3.2	44	15	63	25	30	17
32.578	6	4	3.2	44.5	15	63	25	30	17
32.579	6	6	3.2	45	15	63	25	30	17
32.580	8	6	3.2	57	19	68	29	39	21
32.581	8	8	3.2	57	19	68	29	39	21

info@hidrafluid.es
976 24 32 10

Vacuum regulators

Vacuum regulator 33.105 with vacuum gauge

Product notes

> Vacuum adjustment of consumer loads, such as vacuum cups in handling systems
> Integration of a vacuum gauge recommended
> Blow-off is possible if vacuum gauge is not connected
> Any installation position
> Vacuum gauge not included in scope of delivery

Technical data

Item no.	Max. flow rate [m³/h]	Regulating range [mbar (psi)]	Operating temperature [°C (°F)]	Weight [kg]	Suitable vacuum gauge
33.105	10	-200 - -999 (-2.9 - -14.5)	-10 - 80 (14 - 176)	0.6	91.001
33.120	80	-200 - -999 (-2.9 - -14.5)	-10 - 80 (14 - 176)	2.1	91.003

Dimensions

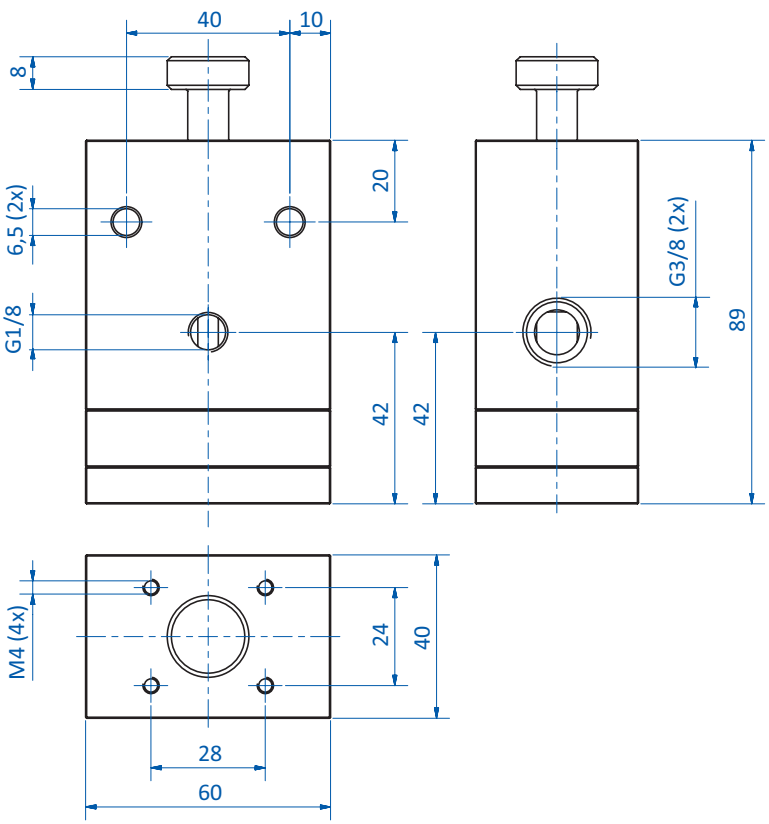

33.105

info@hidrafluid.es
976 24 32 10

Dimensions

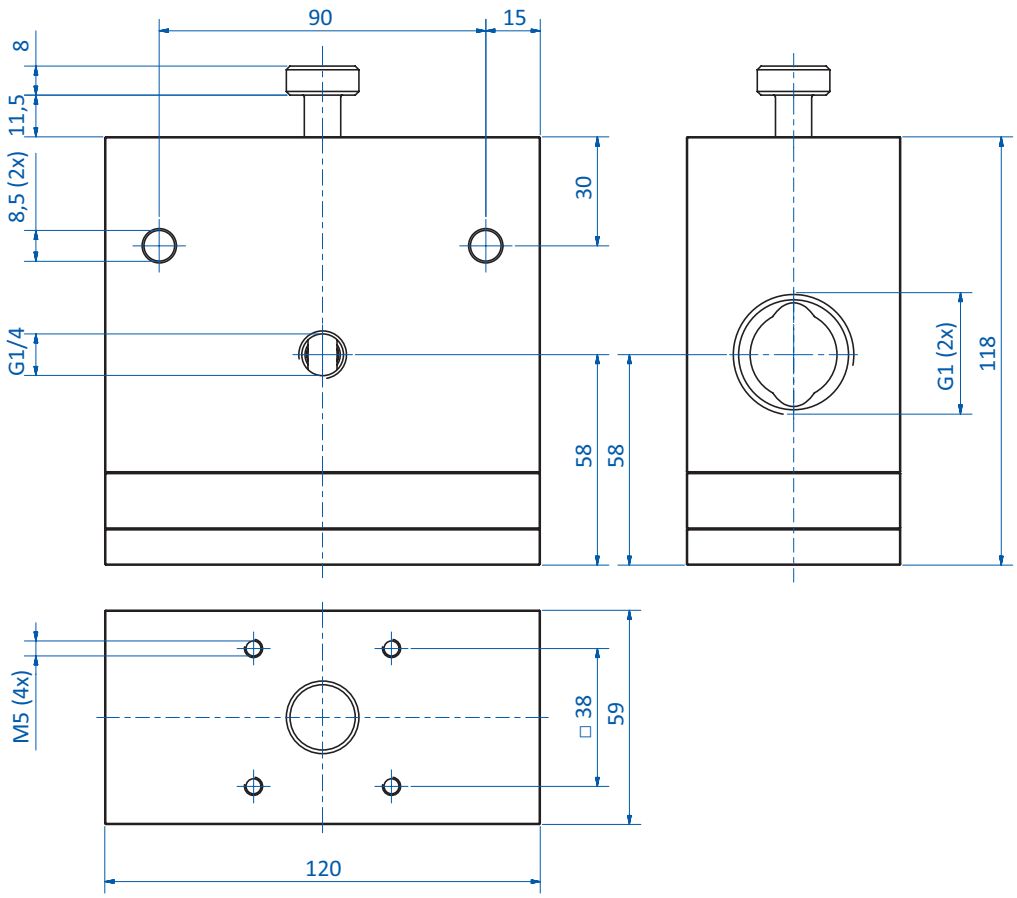

33.120

info@hidrafluid.es
976 24 32 10

Plug-in filters

71.070 and 71.071: plug-in pipe (Ø d1) fits in Ø 4 mm / 6 mm tubing connections

Product notes

> Trapping impurities and liquids which can be suctioned via the vacuum cup or other systems
> To protect vacuum components (e.g. ejectors) from damage or excessive wear
> 71.000 - 71.004: economical use due to replaceable filter cartridges

Technical data

Item no.	Filter surface [cm²]	Grade of filtration [µm]	Weight [g]	Accessories
71.000	7.5	10	16	Mounting bracket: VFUH2 Spare cartridge: 71.005-Kartusche
71.001	7.5	10	17	Mounting bracket: VFUH2 Spare cartridge: 71.005-Kartusche
71.002	12.5	10	25	Mounting bracket: VFUH3 Spare cartridge: 71.006-Kartusche
71.003	12.5	10	27	Mounting bracket: VFUH3 Spare cartridge: 71.006-Kartusche
71.004	12.5	10	33	Mounting bracket: VFUH3 Spare cartridge: 71.006-Kartusche
71.070	0.8	10	1.5	--
71.071	1.1	10	2.5	--

Dimensions

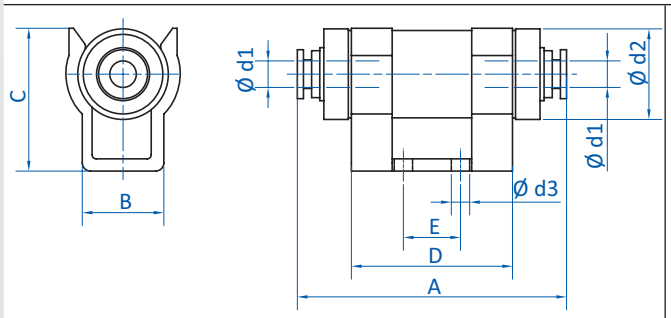

71.000 | 71.001 | 71.002 | 71.003 | 71.004

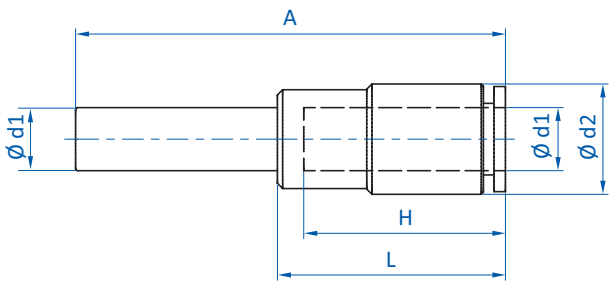

71.070 | 71.071

Item no.	Ø d1 [mm]	Ø d2 [mm]	Ø d3 [mm]	A [mm]	B [mm]	C [mm]	D [mm]	E [mm]	H [mm]	L [mm]
71.000	4	18.5	4.5	58	18	29	33	10	--	--
71.001	6	18.5	4.5	60	18	29	33	10	--	--
71.002	6	22.2	4.5	66.5	20	35	39.5	14	--	--
71.003	8	22.2	4.5	70.1	20	35	39.5	14	--	--
71.004	10	22.2	4.5	72.7	20	35	39.5	14	--	--
71.070	4	8	--	38.6	--	--	--	--	11	21.5
71.071	6	10	--	41	--	--	--	--	11.6	21.8

FIPA challenge accepted
info@hidrafluid.es
976 24 32 10

Filter / Condensate trap

Precipitation of condensable vapors

Product notes

> Efficient and reliable separation of water droplets out of vacuum systems
> Easy installation after vacuum pumps or ejectors
> Housing made of transparent plastics for filtration monitoring
> Drainage valve at the bottom to discharge the collected condensate
> Filter needs to be ventilated before opening

Technical data

Item no.	Max. volume flow [m³/h]	Max. filling capacity [cm³]	Grade of filtration [µm]	Filter material	Max. input pressure [bar (psi)]	Max. operating temperature [°C (°F)]	Weight [kg]	Suitable spare cartridges
71.035	10.6	30	100	Stainless steel mesh	7.3 (105.9)	122 (252)	0.6	71.035-Kartusche
71.036	17.7	25	50	Polyethylene - sintered	7.3 (105.9)	122 (252)	0.8	71.036-Kartusche
71.037	21.2	40	30	Synthetic felt	0.5 (7.3)	122 (252)	1.7	71.037-Kartusche
71.038	35.3	50	30	Synthetic felt	7.3 (105.9)	122 (252)	5	71.038-Kartusche
71.039	58.9	100	30	Synthetic felt	7.3 (105.9)	122 (252)	9.3	71.039-Kartusche

Dimensions

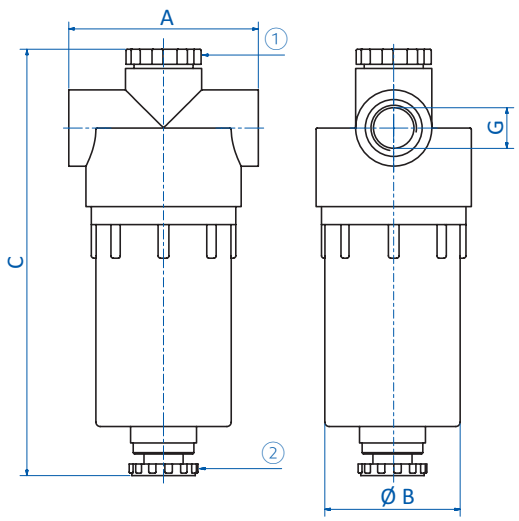

① = Bleeding screw ② = Blow-off screw

Item no.	G	A [mm]	Ø B [mm]	C [mm]
71.035	G3/8	80	75	135
71.036	G1/2	87	60	196
71.037	R3/4	125	100	255
71.038	G1	175	150	370
71.039	G1 1/2	220	190	450

info@hidrafluid.es
976 24 32 10

Flow control valves with flow pin

For handling of porous products

Product notes

> Sealing of unused suction openings to maintain the system vacuum
> Limited leakage prevents premature triggering with porous workpieces
> Compact design
> Optimal installation position is vertical

Technical data

Item no.	Suction power to achieve 30 % vacuum [Nl/min]	Suction power to achieve 60 % vacuum [Nl/min]	Max. flow rate with blow-off at 5 bar (72.5 psi) [Nl/min]	Flow pin bore hole diameter [mm]	Leakage loss [m^3/h]	Weight [g]
63.036	5	5	370	0.8	0.46	8
63.037	11	11	620	1.2	1.04	8
63.038	17	18	480	1.5	1.62	8
63.055	3	3	320	0.6	0.21	8

Dimensions

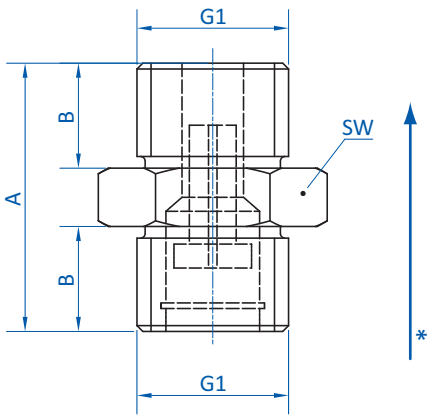

* = Flow direction

Item no.	G1	A [mm]	B [mm]	SW
63.036	G1/4	23	9	17
63.037	G1/4	23	9	17
63.038	G1/4	23	9	17
63.055	G1/8	16	5	12

FIPA challenge accepted
info@hidrafluid.es
976 24 32 10

Solenoid valves for compressed air

Indirectly controlled, with spring reset

36.060

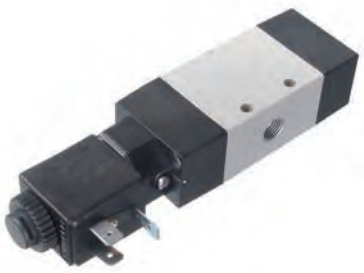

36.061

Product notes

> Suitable for compressed air
> 36.060: for use e.g. to increase cycle times for ejectors without valve technology
Example: vacuum and blow-off control for multi-chamber ejectors e.g. 65.410
- 1x compressed air vacuum generation
- 1x compressed air blow-off
> 36.061: for use e.g. as a blow-off control valve for 3/2-way vacuum valves
> Robust and lightweight housing
> Included in scope of delivery: coil and DIN plug 10.006 for 24 VDC, IP65

Technical data

Item no.	Nominal width [mm]	Nominal flow rate at 6 bar [m³/h]	Control pressure [bar (psi)]	Design	Supply voltage [VDC]	Duty ratio [%]	Max. power consumption [W]	Protection class	Material	Operating temperature [°C (°F)]	Weight [g]
36.060	6	37.2	2.5 - 10 (36.3 - 145)	5/2	24	100	3.8	IP65	High resistant, fiberglass reinforced Polyarylamide (IXEF®)	-5 - 50 (23 - 122)	180
36.061	6	37.2	2.5 - 10 (36.3 - 145)	3/2	24	100	3.8	IP65	High resistant, fiberglass reinforced Polyarylamide (IXEF®)	-5 - 50 (23 - 122)	260

Wiring diagrams

36.060

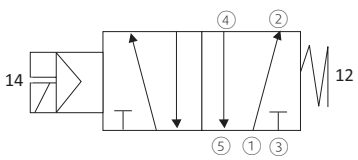

Assignment
① Compressed air inlet
②, ④ Working connection
③, ⑤ Bleeding

36.061

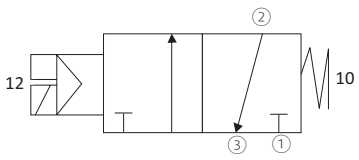

Assignment
① Compressed air inlet
② Working connection
③ Bleeding (e.g. 72.016): This connects valve to atmospheric pressure and enables release of product in case of failure of compressed air line

Continued on the next page

info@hidrafluid.es
976 24 32 10

Application example: usage of 36.061 as control valve to activate blow-off of 3/2-way vacuum valves (here: valve 36.520)

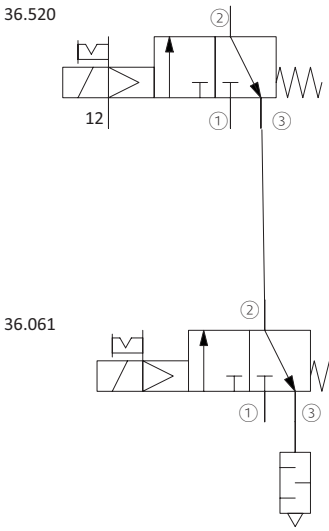

Assignment
① Vacuum supply
② Product side
③ Ventilation (blow-off)

Assignment
① Compressed air inlet
② Compressed air output
③ Use of silencer (e.g. 72.016): This connects valve to atmospheric pressure and enables release of product in case of failure of compressed air line

Dimensions

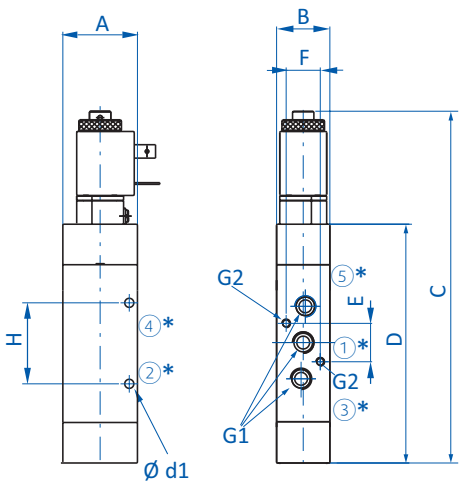

36.060

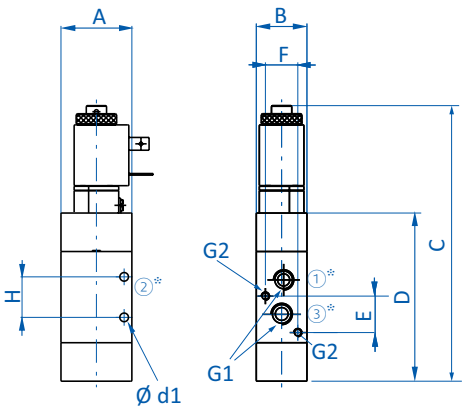

36.061

* = Assignment see wiring diagrams

Item no.	G1	G2	A [mm]	B [mm]	C [mm]	D [mm]	Ø d1 [mm]	E [mm]	F [mm]	H [mm]
36.060	G1/8	M4	35	25	153	100	4.25	18	16	38
36.061	G1/8	M4	35	25	136	83	4.25	18	16	20

FIPA challenge accepted
info@hidrafluid.es
976 24 32 10

2/2-way electromagnetic vacuum valves, directly controlled

Product notes

> Very high suction power at small size for short evacuation time and fast vacuum build-up
> Short response time
> Robust brass housing and compact design for demanding applications
> Also suitable for positive pressure
> Incl. energy-saving coil for minimized power consumption and less heat development
> Energy-saving coil 24 VDC or 230 VAC and DIN plug IP65 included
> Further available voltages:
- VAC: 115, 48, 24
- VDC: 12

Technical data

Item no.	36.004-24VDC	36.004-230VAC
Nominal width [mm]	7	7
Nominal flow rate [m³/h]	4.8	4.8
Pressure range [bar (psi)]	-0.99 - 5 (-14.4 - 72.5)	-1 - 4 (-14.5 - 58)
Operating principle	NC	NC
Switching time [ms]	20	20
Power-on time [ED]	100 %	100 %
Max. power consumption [W]	18	9
Protection class	IP65	IP65
Operating temperature [°C (°F)]	-10 - 60 (14 - 140)	-10 - 60 (14 - 140)
Weight [g]	520	520
Accessories	Plug: 10.007 Coil: 10.0050/24VDC	Plug: 10.007 Coil: 10.0050/230VAC

Wiring diagram

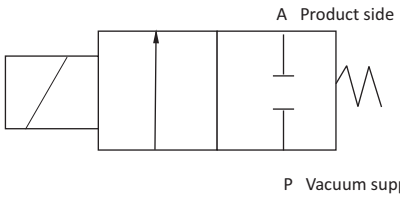

Continued on the next page

info@hidrafluid.es
976 24 32 10

Dimensions

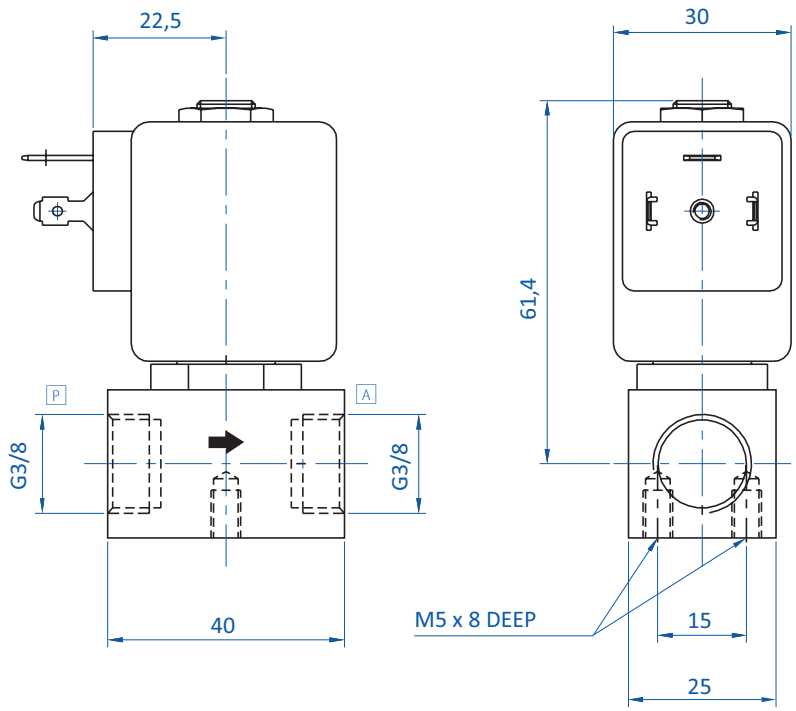

A = Product side P = Vacuum supply

info@hidrafluid.es
976 24 32 10

3/2-way solenoid vacuum valve, directly controlled

Product notes

> Very high suction power at small size for short evacuation time and fast vacuum build-up
> Small, compact and lightweight
> Suction on/off, blow-off or ventilation of vacuum cups
> HNBR diaphragm allows for flexible installation due to resistance against low ozone concentrations
> Fast switching time
> Factory set NO, can be switched to NC by the customer
> To be mounted in any position
> Resistance against low ozone concentration
> Included in scope of delivery: coil 24 VDC and DIN plug
> Other voltages on request

Technical data

Item no.	**36.003**
Connection	G 1/4
Nominal width [mm]	4.5
Nominal flow rate [m³/h]	2.1
Pressure range [bar (psi)]	-1 - 0 (-14.5 - 0)
Max. switching frequency [Hz]	10
Response time [ms]	20
Protection class	IP65
Operating principle	NC/NO
Duty ratio [%]	75
Operating voltage [VDC]	24
Power consumption [W]	4
DIN-plug	Yes
Operating temperature [°C (°F)]	-10 - 50 (14 - 122)
Weight [g]	155

Wiring diagram

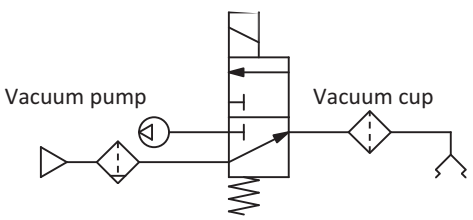

Continued on the next page

info@hidrafluid.es
976 24 32 10

Dimensions

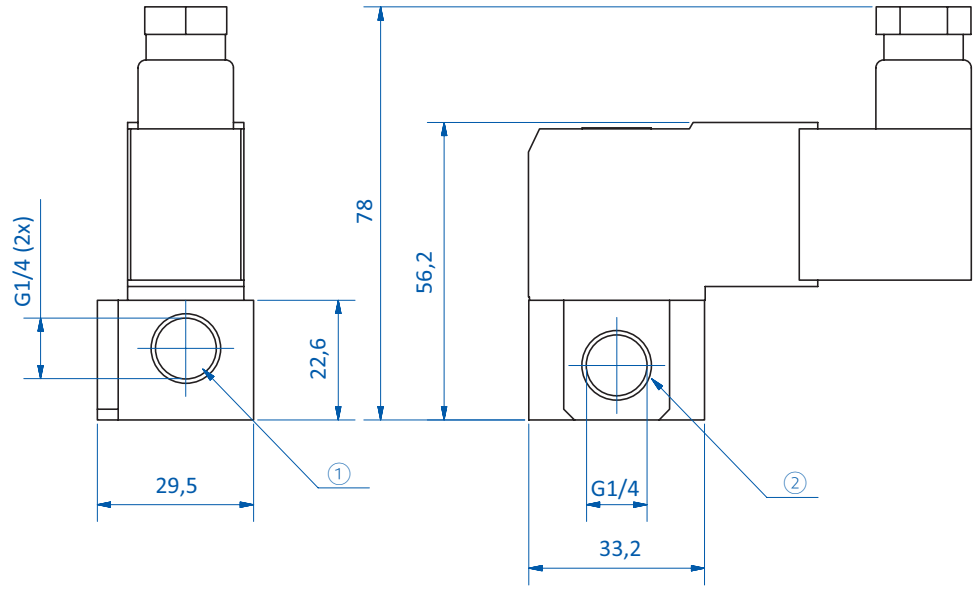

① = Vacuum supply ② = Compressed air, blow-off

info@hidrafluid.es
976 24 32 10

3/2-way solenoid vacuum valves, pneumatically supported with spring reset

36.210 | 36.211

36.515 - 36.525

Product notes

> Suction, blow-off, ventilation of vacuum cups
> High suction power at small construction for short evacuation times and fast vacuum build-up
> Short switching times
> Function: NC/NO as vacuum supply and blow-off/ventilation inlets can be exchanged
> NO: safe gripping of workpiece during power failure
> Robust and lightweight housing
> 36.210 and 36.211: coil and DIN plug included in scope of delivery
> 36.515 - 36.525: delivery without coil and plug; please order: Power consumption: 24 VDC: 5 W, 230 VAC: 5 W

Technical data

Item no.	Nominal width [mm]	Nominal flow rate [m³/h]	Pressure range [bar (psi)]	Operating principle	Control pressure [bar (psi)]	Switching time [ms]	Material	Operating temperature [°C (°F)]	Weight [g]	Accessories
36.210	10	10	-0.99 - 0 (-14.4 - 0)	NC	2.5 (36.3)	22	Aluminum anodized	-5 - 50 (23 - 122)	360	--
36.211	10	10	-0.99 - 0 (-14.4 - 0)	NO	2.5 (36.3)	22	Aluminum anodized	-5 - 50 (23 - 122)	360	--
36.515	15	20	-0.99 - 0 (-14.4 - 0)	NO/NC	2.5 (36.3)	90	High resistant, fiberglass reinforced Polyarylamide (IXEF®)	-5 - 50 (23 - 122)	390	Solenoid coil: 10.0058/230VAC Solenoid coil: 10.0052/24VDC Plug: 10.006
36.520	20	40	-0.99 - 0 (-14.4 - 0)	NO/NC	2.5 (36.3)	90	High resistant, fiberglass reinforced Polyarylamide (IXEF®)	-5 - 50 (23 - 122)	370	Solenoid coil: 10.0058/230VAC Solenoid coil: 10.0052/24VDC Plug: 10.006
36.525	25	90	-0.99 - 0 (-14.4 - 0)	NO/NC	2.5 (36.3)	90	High resistant, fiberglass reinforced Polyarylamide (IXEF®)	-5 - 50 (23 - 122)	500	Solenoid coil: 10.0058/230VAC Solenoid coil: 10.0052/24VDC Plug: 10.006

Wiring diagrams

NO: Normally open

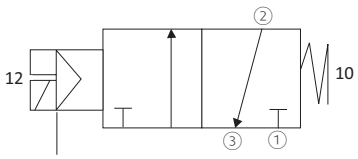

Assignment:
① = P (ventilation (blow-off))
② = A (product side)
③ = R (vacuum supply)

NC: Normally closed

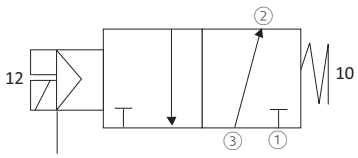

Assignment:
① = P (vacuum supply)
② = A (product side)
③ = R (ventilation (blow-off))

Continued on the next page

info@hidrafluid.es
976 24 32 10

Pilot valve

> Manual mode for functional test: setscrew in position "0"
> Automatic mode: setscrew in position "1"

Wiring diagram: how to combine vacuum valve with pneumatic control valve for blow-off

Vacuum valve 36.520

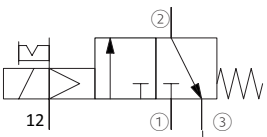

Assignment
① Vacuum supply
② Product side
③ Ventilation (blow-off)

Control valve 36.061

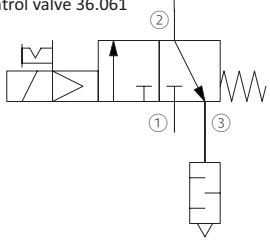

Assignment
① Compressed air inlet
② Compressed air output
③ Use of silencer (e.g. 72.016): This connects valve to atmospheric pressure and enables release of product in case of failure of compressed air line

Application example: 3/2-way vacuum valves 36.520 with control valve 36.061

FIPA challenge accepted
info@hidrafluid.es
976 24 32 10

Dimensions

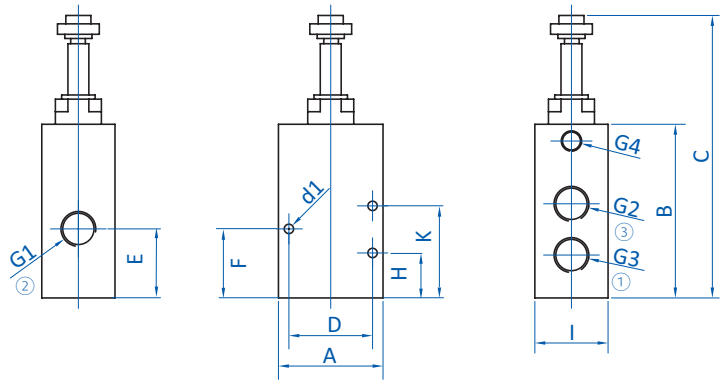

36.210 | 36.211

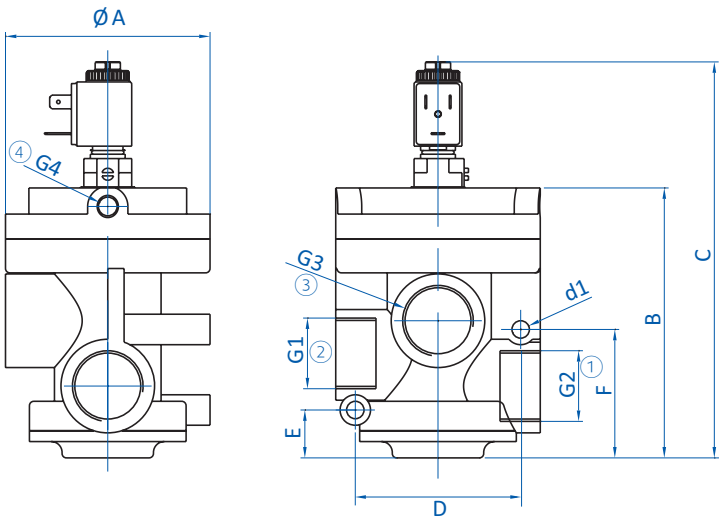

36.515 | 36.520 | 36.525

① = Vacuum supply/Ventilation (blow-off) ② = Product side ③ = Ventilation (blow-off) / Vacuum supply ④ = Control pressure connection

Item no.	G1	G2	G3	G4	Ø A [mm]	A [mm]	B [mm]	C [mm]	D [mm]	d1 [mm]	E [mm]	F [mm]	H [mm]	I [mm]	K [mm]
36.210	G3/8	G3/8	G3/8	G1/8	--	50	83	137	40	4.5	33	32.8	22.5	35	44
36.211	G3/8	G3/8	G3/8	G1/8	--	50	83	137	40	4.5	33	32.8	22.5	35	44
36.515	G1/2	G1/2	G1/2	G1/8	75	--	101	155	63	6.5	22.5	55	--	--	--
36.520	G3/4	G3/4	G3/4	G1/8	75	--	101	155	63	6.5	22.5	55	--	--	--
36.525	G1	G1	G1	G1/8	92	--	114.5	168.5	63	6.9	22	58	--	--	--

info@hidrafluid.es
976 24 32 10

Vacuum switch – electronic with analog output

Product notes

> Analog output enables monitoring of the continuous vacuum trend
> Compact and light design for installation directly on the vacuum cup
> LED-display in plug connection
> As an option: mounting rail 20.008-H incl. slot nuts for mounting the vacuum switch, e.g. on FIPA SLine extrusions

Technical data

Item no.	**20.007**
Adjustable range [mbar (psi)]	-999 - 0 (-14.5 - 0)
Hysteresis	0 - 30 %
Analog output [VDC]	1 - 5
Switching logic	Contact breaker (NC)
Response time [ms]	< 5
Thermal error	± 3 % from measuring range
Overpressure safety [bar (psi)]	3 (43.5)
Supply voltage [VDC]	18 - 30
Current consumption [mA]	< 20
Electric connection	Plug M8x1, 4-pin
Protection class	IP50
Suitable media	Dry, unoiled air and non-abrasive gases
Operating temperature [°C (°F)]	0 - 50 (32 - 122)
Weight [g]	85
Accessories	Mounting rail: 20.008-H Connector cable: 20.501 (p.410) Connector cable: 20.502 (p.410)

Dimensions

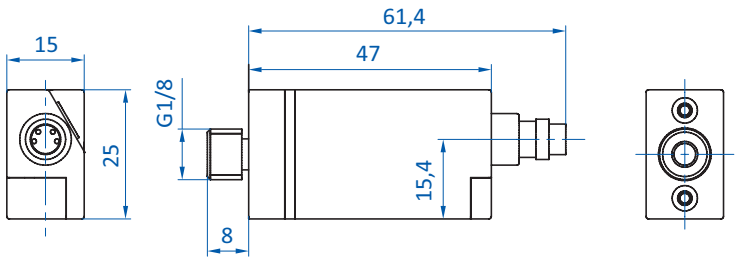

info@hidrafluid.es
976 24 32 10

Mini vacuum switch – electronic with digital output

Example: mini vacuum switch 20.040 on ejector EBA.08H.2-A and flat vacuum cup Ø 40 mm

Product notes

> Switch outputs a digital signal when a specific vacuum level is reached
> Vacuum level is manually set with a potentiometer screw
> Hysteresis is fixed
> Red LED indicates set level reached
> Space-saving installation on ejectors thanks to very small design
> Included in scope of delivery: cable 1.5 m, 3-pole, open wire

Technical data

Item no.	20.040	20.041
Adjustable range [mbar (psi)]	-990 - 0 (-14.4 - 0)	-990 - 0 (-14.4 - 0)
Hysteresis	3 % from default setting	3 % from default setting
Digital switching outputs	PNP	NPN
Response time [ms]	~ 1	~ 1
Repeat accuracy [%]	≤ ± 1 % from measuring range	≤ ± 1 % from measuring range
Overpressure safety [bar (psi)]	2 (29)	2 (29)
Supply voltage [VDC]	10.8 - 30	10.8 - 30
Max. current consumption [mA]	10	10
Vacuum connection	M5	M5
Protection class	IP40	IP40
Suitable media	Filtered, oiled or unoiled air or neutral gases	Filtered, oiled or unoiled air or neutral gases
Operating temperature [°C (°F)]	0 - 60 (32 - 140)	0 - 60 (32 - 140)
Weight [g]	20	20

Dimensions

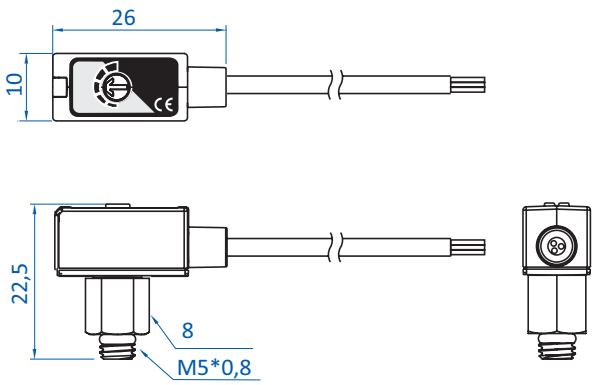

Wiring diagrams

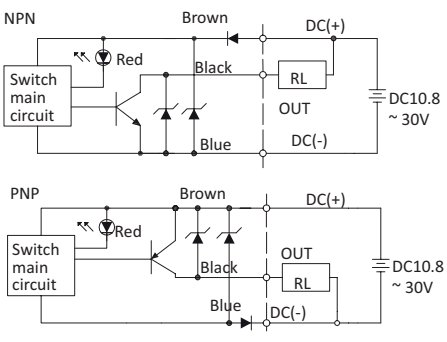

info@hidrafluid.es
976 24 32 10

Vacuum switch – electronic with two digital outputs and display

GS02.001

20.022

Product notes

> Monitoring of vacuum levels, e.g. in handling systems
> Optimization of cycle times to improve the economy of vacuum systems
> Two freely adjustable digital outputs to set lower and upper threshold values
> Additional analog output
> 7-segment LED-display
> Protection class IP65 (no ventilation tube required)
> Integrated reverse voltage protection
> Compact, lightweight and robust design
> Flexible mounting: GS.001 can be rotated 360° after installation

Notes

> Transient emissions: EN 61000-6-4:2007; EN 61326-2-3:2006
> Interference resistance: EN 61000-6-2:2005; EN 61326-2-3:2006
> Vacuum values can be displayed and adjusted by the customer in following units: MPa, bar, inHg, mmHg

Technical data

Item no.	GS02.001	20.022
Measuring range [bar (inHg)]	-1 - 0 (-29.5 - 0)	-1 - 0 (-29.5 - 0)
Digital switching outputs	2x PNP (NO or NC)	2x PNP (NO or NC)
Repeat accuracy [%]	± 0.2 % from measuring range	± 0.2 % from measuring range
Overpressure safety [bar (psi)]	6 (87)	6 (87)
Supply voltage [VDC]	11 - 30	11 - 30
Current consumption [mA]	< 55	< 55
Max. switching current [mA]	125	125
Electric connection	Plug M8x1, 4-pin	Plug M8x1, 4-pin
Protection class	IP65	IP65
Suitable media	Filtered, oiled or unoiled air or neutral gases	Filtered, oiled or unoiled air or neutral gases
Operating temperature [°C (°F)]	0 - 50 (32 - 122)	0 - 50 (32 - 122)
Weight [g]	25	45
Accessories	Adapter: 20.522 (p.380), Adapter: 20.523 (p.380), Adapter: 20.511 (p.380), Connector cable: 20.501 (p.410), Connector cable: 20.502 (p.410), Wall clip: 20.520 (p.383)	Connector cable: 20.501 (p.410), Connector cable: 20.502 (p.410), Mounting bracket: 20.514 (p.382), Mounting bracket: 20.515 (p.382)

Dimensions

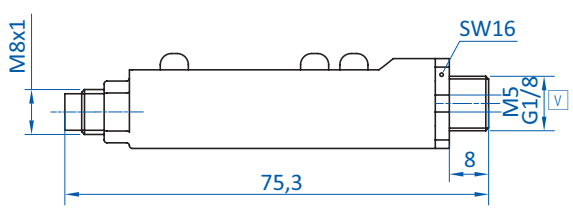

GS02.001

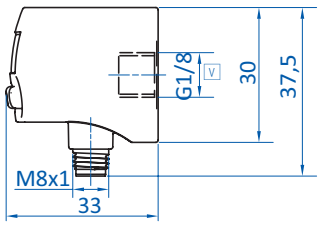

20.022

V = Vacuum connection

info@hidrafluid.es
976 24 32 10

Pressure switches – electronic with two digital switching outputs

Diagram with installation kit 20.515 for control panel installation

Product notes

> Intelligent sensor for pressure monitoring
> Adjustable with "teaching" feature
> Switching point and hysteresis can be programmed as desired
> Simple operation using button functions and LCD-display
> Small and robust

Notes

> Transient emissions: EN 61000-6-4:2007; EN 61326-2-3:2006
> Interference resistance: EN 61000-6-2:2005; EN 61326-2-3:2006
> Vacuum values can be displayed and adjusted by the customer in following units: MPa, bar, psi

Technical data

Item no.	**20.023**
Measuring range [bar (inHg)]	0 - 10 (0 - 295.3)
Digital switching outputs	2x PNP (NO/NC)
Repeat accuracy [%]	± 0.2 % from measuring range
Overpressure safety [bar (psi)]	0.2 (2.9)
Supply voltage [V]	11 - 30
Current consumption [mA]	< 55
Max. switching current [mA]	125
Electric connection	Plug M8x1, 4-pin
Protection class	IP65
Suitable media	Filtered, oiled or unoiled air or neutral gases
Operating temperature [°C (°F)]	0 - 50 (32 - 122)
Weight [g]	40
Accessories	Connector cable: 20.501 (p.410), Connector cable: 20.502 (p.410), Mounting bracket: 20.514 (p.382), Mounting bracket: 20.515 (p.382)

Dimensions

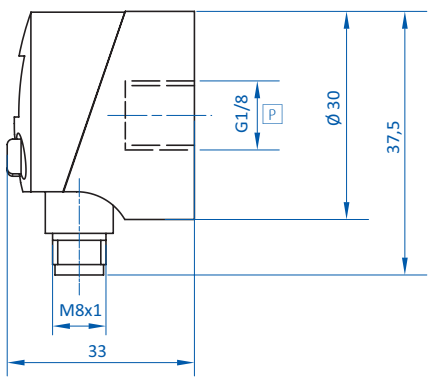

P = Compressed air connection

info@hidrafluid.es
976 24 32 10

Adapter and mounting brackets for vacuum switches and pressure switches

20.522 | 20.523

20.511

Ordering notes

> Mounting material included in scope of delivery

Technical data

Item no.	Description	Suitable for vacuum/pressure switches
20.511	Push-in fitting G1/8, hose-Ø 6 mm with mounting angle	20.020, GS02.001, 20.026, 20.027
20.522	Adapter with angle bracket for flange assembly	20.020, GS02.001, 20.026, 20.027
20.523	Adapter for flange assembly	20.020, GS02.001, 20.026, 20.027

Dimensions

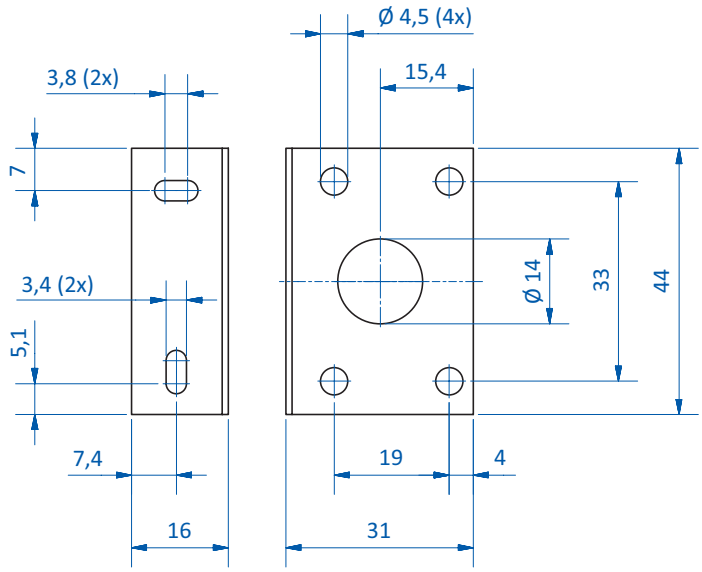

20.511

* = Push-in fitting G1/8, tubing Ø 6 mm not displayed

FIPA challenge accepted
info@hidrafluid.es
976 24 32 10

Dimensions

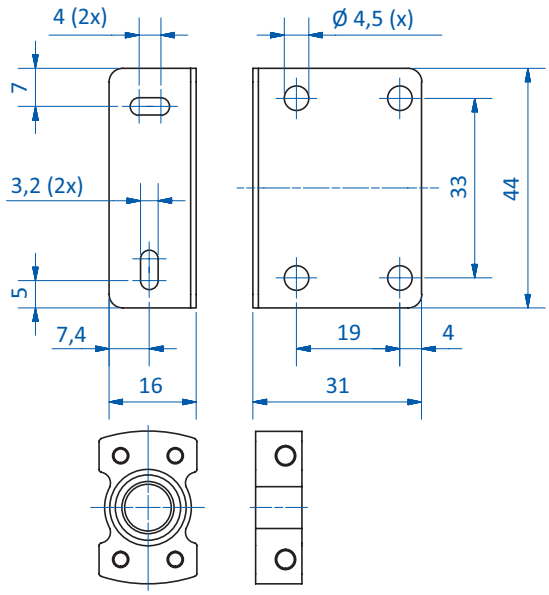

20.522

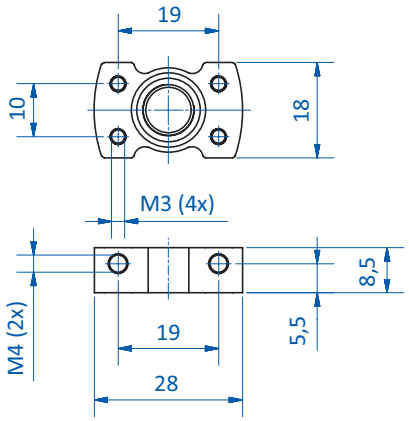

20.523

* = Push-in fitting G1/8, tubing Ø 6 mm not displayed

info@hidrafluid.es
976 24 32 10

Mounting frame and brackets for front panel mounting

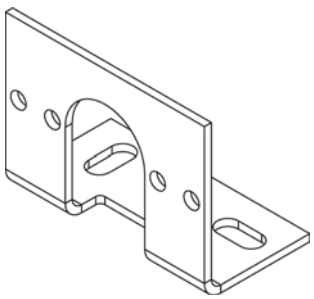

Example application: gauge 20.023 with installation kit 20.515

Product notes

> Mounting material included in scope of delivery

Technical data

Item no.	Description	Suitable for vacuum/pressure switches
20.514	Bracket	20.022, 20.023, 91.012
20.515	Mounting frame with bracket	20.022, 20.023, 91.012

Dimensions

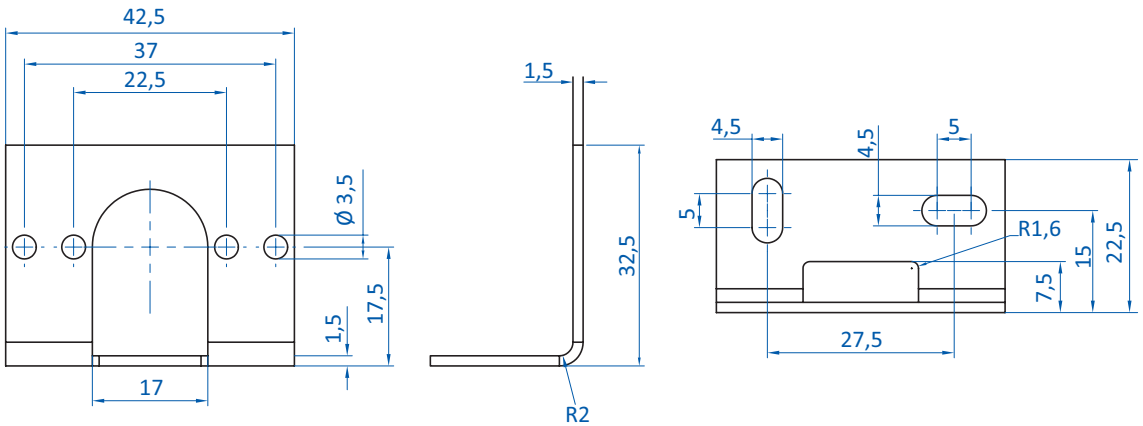

20.514

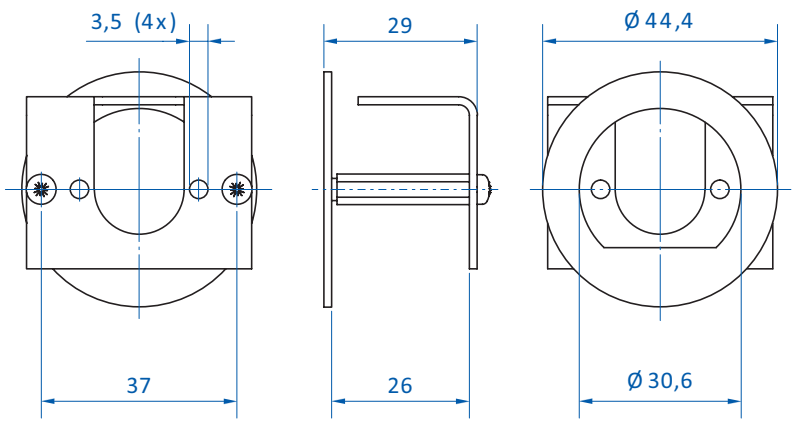

20.515

* = Installation frame drilling dimensions

FIPA challenge accepted

info@hidrafluid.es
976 24 32 10

Clip 16 mm for wall mounting

Suitable for vacuum switches 20.020 and GS02.001

Product notes

> Mounting via through hole Ø 5 mm located centric at bottom side

Technical data

Item no.	Suitable for vacuum/pressure switches
20.520	20.020, GS02.001

Dimensions

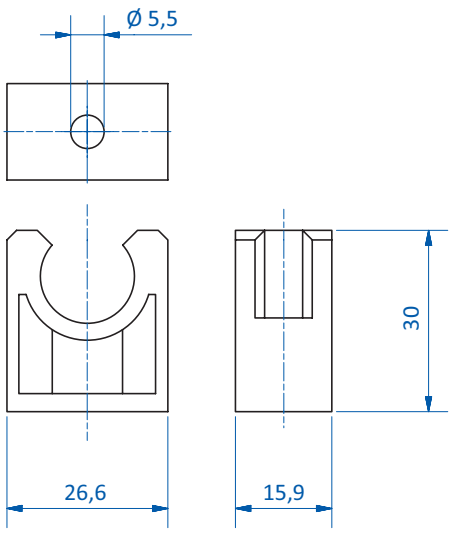

info@hidrafluid.es
976 24 32 10

Notes:

FIPA challenge accepted

info@hidrafluid.es
976 24 32 10

Vacuum generation at a glance 386

Inline ejectors 388

Base ejectors 390

Heavy-duty ejectors 392

Ejectors with air saving function 394

Silencers for vacuum ejectors 398

info@hidrafluid.es
976 24 32 10

FIPA Vacuum generation

> FIPA offers a broad range of vacuum generators – pneumatically operated or motor-driven
> High suction power for short gripping time

Inline ejectors EIL

> Easy installation directly in the tubing line close to the vacuum cup
> Small and light

> See page 388

Base ejectors with integrated blow-off

> Installation directly on vacuum cups
> Small and light
> Ideally suited for robotic applications with very short cycles such as Delta Robots or similar

> See page 390

Heavy-duty ejectors

> Compensation of compressed air fluctuations between 3 and 6 bar
> Additional inlet for blow-off for fast product release or vacuum switch connection for process monitoring (65.111, 65.130)
> Rectangular design enables block assembly in centralized or decentralized vacuum systems

> See page 392

Ejectors with air-saving function EMA

> Electronic vacuum and blow-off control
> Electronic air-saving function reduces operating costs up to 90 % with dense workpieces
> Compact design, installation near to the vacuum cup

> See page 394

info@hidrafluid.es
976 24 32 10

FIPA Vacuum generation

Rotary vane vacuum pumps – oil-free

> Handling of dense workpieces in dry areas
> Suitable for load alternation and continuous operation
> Available in single-phase and three-phase designs
> Any installation position
> Very low maintenance

Piston pumps

> Small output at compact design
> Suitable for dry and wet areas
> Long-life and low maintenance thanks to the permanently lubricated piston seals
> Oil-free operation
> Also suitable as compressors

Rotary vane vacuum pumps – oil-lubricated

> Handling dense and porous workpieces
> Partially suitable for applications in wet areas
> Suitable for continuous operation in product-dependent vacuum levels
> Available in single-phase and three-phase designs
> Horizontal installation position

Centralized vacuum units

> Supply of several modules via a central station
> Made up of one to three oil-lubricated vacuum pumps
> Incl. vacuum tank and electronic control

On request

Side channel blowers – single-stage and double-stage

> Handling of porous workpieces, such as cardboard boxes or untreated wooden pallets
> Double-stage design offers higher suction power at the same vacuum level for effective leak compensation
> Suitable for use in wet and dry areas
> Suitable for continuous operation
> Horizontal and vertical installation
> Practically maintenance-free

Accessories

Vacuum tanks

> Storage for compressed air, vacuum and non-aggressive liquids
> Energy-saving assembly of compressed air and vacuum
> For compressed air / vacuum networks with fluctuating demand

For additional product information please refer to the FIPA Vacuum Technology Catalog.
Our technical customer service will be happy to help you find the optimal products for your application.
(email: info@fipa.com; phone: +49 89 962489-0)

info@hidrafluid.es
976 24 32 10

Inline ejectors EIL

Compressed air and vacuum connection via quick fittings, lateral exhaust

V = Vacuum connection P = Compressed air connection EX = Exhaust outlet

Product notes

> Easy installation directly in the tubing line close to the vacuum cup
> High suction power enables short gripping times
> Index H: ejectors for non-air-permeable products (max. vacuum degree 85 %)
> Index L: ejectors for air-permeable products, resp. in case of higher leakage (increased suction, max. vacuum degree 60 %)

Technical data

Item no.	EIL.05H.1	EIL.05H.2	EIL.05L.1	EIL.05L.2	EIL.07H.1	EIL.07H.2	EIL.07L.1	EIL.07L.2
Nozzle diameter [mm]	0.5	0.5	0.5	0.5	0.7	0.7	0.7	0.7
Optimal operating pressure [bar (psi)]	5 (72.5)	5 (72.5)	5 (72.5)	5 (72.5)	5 (72.5)	5 (72.5)	5 (72.5)	5 (72.5)
Suction power at 5 bar (72.5 psi) [Nl/min]	8	8	14	14	13	13	28	28
Air consumption at 5 bar (72.5 psi) [Nl/min]	14	14	14	14	28	28	28	28
Final vacuum at 5 bar (72.5 psi) [%]	85	85	60	60	85	85	60	60
Evacuation time 0 to 70 % [s/l]	13	13	--	--	7.5	7.5	--	--
Evacuation time 0 to 45 % [s/l]	--	--	4	4	--	--	2	2
Weight [g]	13	15	13	15	13	15	13	15
Suitable plug-in filter	71.071 (p.364)	--	71.071 (p.364)	--	71.071 (p.364)	--	71.071 (p.364)	--

Dimensions

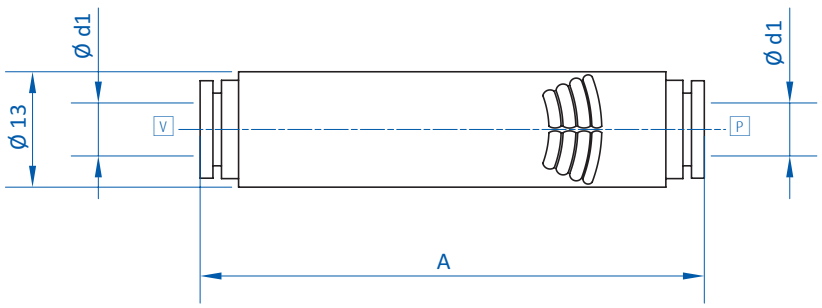

EIL.05H.1 | EIL.05L.1 | EIL.07H.1 | EIL.07L.1

V = Vacuum connection P = Compressed air connection

FIPA challenge accepted
info@hidrafluid.es
976 24 32 10

Dimensions

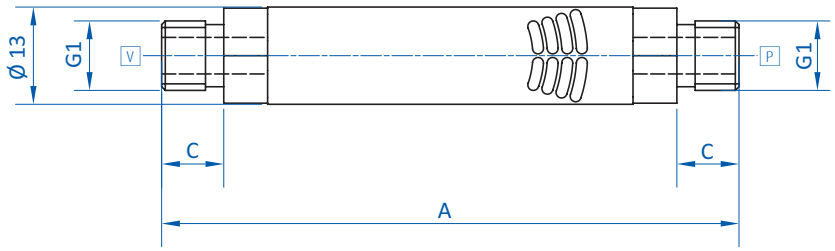

EIL.05H.2 | EIL.05L.2 | EIL.07H.2 | EIL.07L.2

V = Vacuum connection P = Compressed air connection

Item no.	EIL.05H.1	EIL.05H.2	EIL.05L.1	EIL.05L.2	EIL.07H.1	EIL.07H.2	EIL.07L.1	EIL.07L.2
G1	--	G1/8	--	G1/8	--	G1/8	--	G1/8
d1 [mm]	6	--	6	--	6	--	6	--
A [mm]	61	78	61	78	61	78	61	78
C [mm]	--	8	--	8	--	8	--	8

Diagrams

> Suction power and air consumption against feed pressure

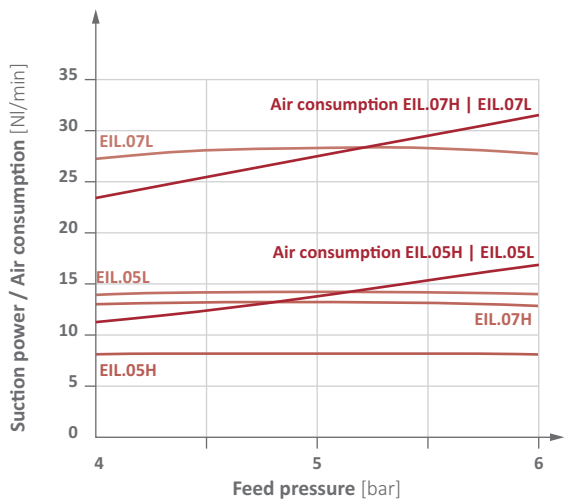

> Vacuum level against feed pressure

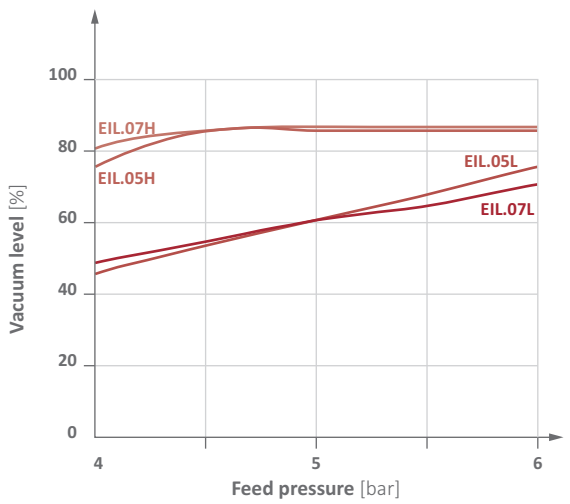

Suction power [Nl/min] at vacuum level

Item no.	0 %	10 %	20 %	30 %	40 %	50 %	60 %	70 %	80 %
EIL.05H.1	8	5.3	4.2	3.9	3.3	2.5	1.3	0.4	0.1
EIL.05H.2	8	5.3	4.8	3.9	3.3	2.5	1.3	0.4	0.1
EIL.05L.1	14	11.9	9	6.8	4.3	2.2	0.1	--	--
EIL.05L.2	14	11.9	9	6.8	4.3	2.2	0.1	--	--
EIL.07H.1	13	10.8	9.2	8.1	7	5.2	4.1	2.7	1.1
EIL.07H.2	13	10.8	9.2	8.1	7	5.2	4.1	2.7	1.1
EIL.07L.1	28	26	22.1	17.6	10.8	5.4	1.9	--	--
EIL.07L.2	28	26	22.1	17.6	10.8	5.4	1.9	--	--

info@hidrafluid.es
976 24 32 10

Base ejectors with integrated blow-off

VERY SHORT RESPONSE TIME, SAFE AND GENTLE PRODUCT RELEASE

Example: ejector EBA.08H.2-A with digital mini vacuum switch 20.040, closed diffusor silencer 72.000 and flat vacuum cup Ø 40 mm

Product notes

> Small and very light for installation directly on vacuum cups for fast vacuum build-up and short gripping times
> Blow-off from a fast-reacting micro valve enables very short cycle times
> Graded blow-off boost effect: initially the blow-off is supported by ambient air, for placement that is both quick and gentle
> Robust design and long service life of > 100 million switching cycles
> M5 connection for digital mini vacuum switch to ensure reliable process monitoring
> Ideally suited for robotic applications with very short cycles such as Delta Robots (e.g. FlexPickers)

Ordering notes

> Included in delivery: control cable 20.550, length 1.5 m, 2-wire, free end

Technical data

Item no.	**EBA.08H.2-A**
Nozzle diameter [mm]	0.8
Optimal operating pressure [bar (psi)]	5 (72.5)
Max. operating pressure [bar (psi)]	8 (116)
Final vacuum [%]	85
Suction power at 5 bar (72.5 psi) [Nl/min]	25
Air consumption at 5 bar (72.5 psi) [Nl/min]	30
Flow rate solenoid valve [Nl/min]	15
Blow-off volumes of flow [Nl/min]	110 - 45
Power-on time solenoid valve (ED) [%]	100
Power-on/-off time solenoid valve [ms]	5
Power consumption solenoid valve [W]	0.9
Control voltage	24 VDC ± 10 %
Protection class	IP40
Operating temperature [°C (°F)]	-10 - 50 (14 - 122)
Weight [g]	35
Accessories	Connector cable: 20.550 (p.410), Vacuum switch: 20.040 (p.377), Vacuum switch: 20.041 (p.377), Silencer: 72.000 (p.399), Silencer: 72.028 (p.398)

Control cable 20.550

Cable assignment: red (+), black (-)

info@hidrafluid.es
976 24 32 10

Integrated blow-off with boost-effect

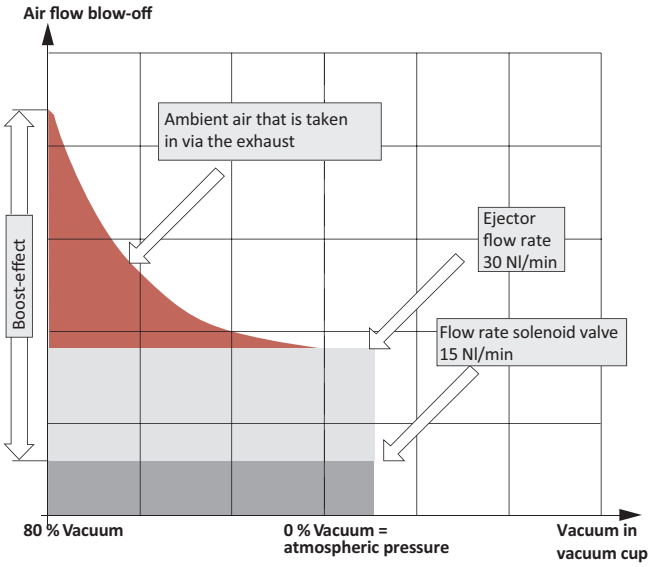

Evacuation / Blow-off time

Evacuation / Blow-off time 1 liter volume up to % vacuum / atmospheric pressure [sec.]		
0 → 50 % / 50 % → 0	0 → 60 % / 60 % → 0	0 → 70 % / 70 % → 0
1.8 / 0.5	2.5 / 0.56	3.9 / 0.61

Evacuation / Blow-off time: example with Ø 30 mm flat suction cups, volume 1.7 cm³ up to % vacuum / atmospheric pressure [ms]		
0 → 50 % / 50 % → 0	0 → 60 % / 60 % → 0	0 → 70 % / 70 % → 0
3 / < 1	4 / < 1	7 / 1

Dimensions

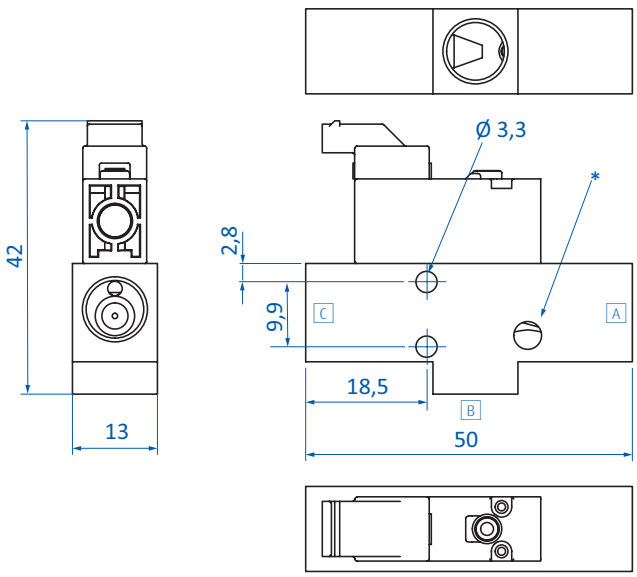

A = Compressed air connection G1/8-female B = Vacuum connection G1/8-female C = Exhaust outlet G1/8-female
* = M5 connection for vacuum switches

info@hidrafluid.es
976 24 32 10

Heavy-duty ejectors

Vacuum generation for use under harsh operating conditions

Product notes

> Robust and compact aluminum housing
> Compensation of compressed air fluctuations between 3 and 6 bar (43.5 and 87 psi)
> Additional inlet for blow-off for fast product release or vacuum switch connection for process monitoring (65.111, 65.130)
> Rectangular design enables block assembly in centralized or decentralized vacuum systems

Technical data

Item no.	Optimal operating pressure [bar (psi)]	Max. operating pressure [bar (psi)]	Final vacuum [%]	Suction power [Nl/min]	Air consumption to 4 bar (58 psi) [Nl/min]	Evacuation time 0 to 70 % [s/l]	Weight [g]	Accessories
65.102A	4 (58)	6 (87)	85	30	50	3.5	48	Silencer: 72.001 (p.399) Silencer: 72.029 (p.398)
65.111	4 (58)	6 (87)	85	33	60	3	120	Silencer: 72.002 (p.399) Silencer: 72.030 (p.398)
65.120	4 (58)	6 (87)	85	85	130	1.5	125	Silencer: 72.031 (p.398)
65.130	4 (58)	6 (87)	85	130	240	0.7	225	Silencer: 72.033 (p.398)

Dimensions

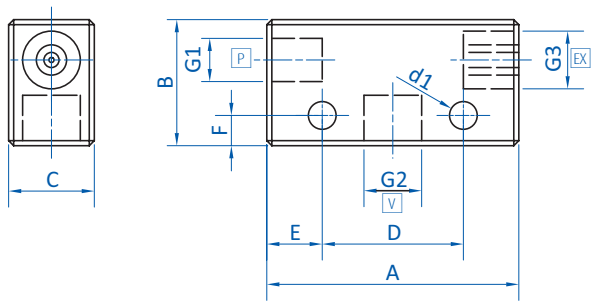

65.102A

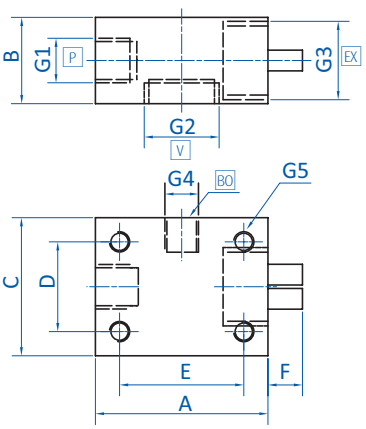

65.111 | 65.120 | 65.130

P = Compressed air connection V = Vacuum connection EX = Exhaust BO = Blow-off (65.111 and 65.130)

Item no.	G1	G2	G3	G4	G5	A [mm]	B [mm]	C [mm]	D [mm]	d1 [mm]	E [mm]	F [mm]
65.102A	G1/8	G1/4	G1/4	--	--	50	25	17	28	5.5	11	6
65.111	G1/4	G1/2	G3/8	G1/8	6.5	50	25	40	25	--	34	8
65.120	G1/4	G1/2	G1/2	G1/8	M6	50	25	40	25	--	34	10
65.130	G1/4	G1/2	G1	G1/8	M6	60	40	40	25	--	34	--

FIPA challenge accepted
info@hidrafluid.es
976 24 32 10

Diagrams

> Suction power against feed pressure

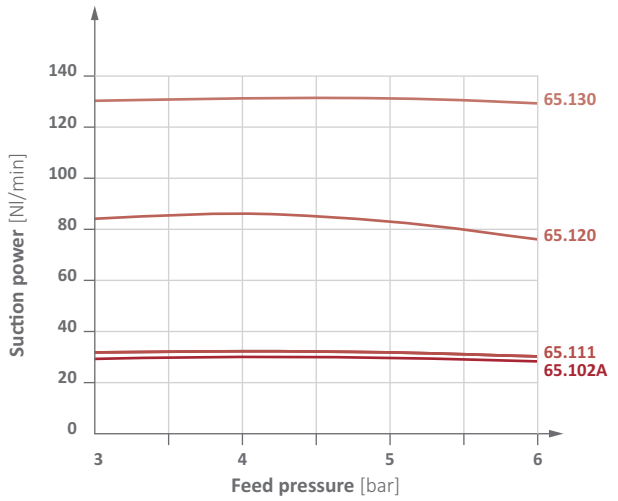

> Air consumption against feed pressure

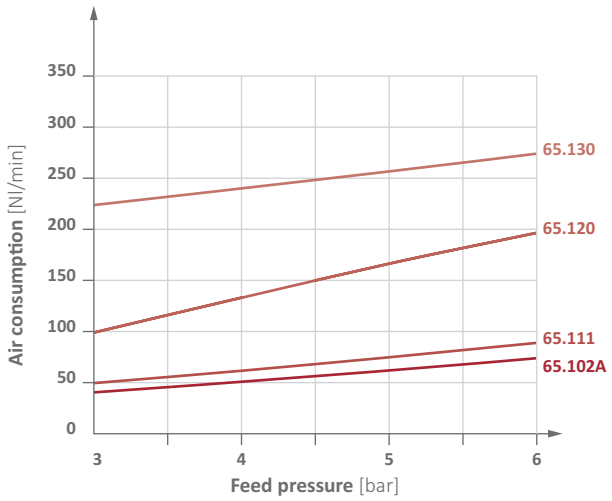

> Vacuum level against feed pressure

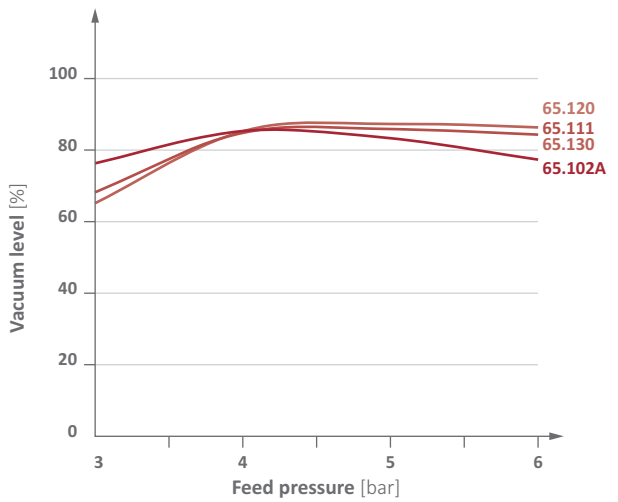

Suction power [Nl/min] at vacuum level

Item no.	10 %	20 %	30 %	40 %	50 %	60 %	70 %	80 %
65.102A	25	23	19	15	13	8	4	1
65.111	25	23	20	17	13	8	4	1
65.120	76	66	55	41	34	22	12	3
65.130	182	160	135	69	52	33	17	6

info@hidrafluid.es
976 24 32 10

Ejectors with air-saving function EMA

Double energy efficient by integrated pressure control and electronic air-saving function

SAVES UP TO 90 % OF ENERGY

Product notes

> Electronic air-saving function reduces operating costs by up to 90 % with dense workpieces
> Pressure regulation energy-saving function at constant 3.5 bar (50.76 psi) reduces operating costs by up to 50 % with porous workpieces
- Energy saving increases along with the difference between supply pressure and operating pressure
> Electronic vacuum and blow-off control for short cycle times
> Manual adjustment of the blow-off flow rate using a setscrew
> Very compact design with integrated open silencer
> Dust-resistant design, no additional filters required
> NO-version on request
> Smaller nozzle diameters on request
> If the ejector experiences power failure, the workpiece is only held by the vacuum between non-return valve and product surface
> Vacuum and blow-off are controlled using a single signal

Technical data

Item no.	**EMA.90x14**
Nozzle diameter [mm]	1.4
Feed pressure [bar (psi)]	4 - 8 (58 - 116)
Internal working pressure [bar (psi)]	3.5 (50.8)
Final vacuum [%]	90
Suction power [Nl/min]	70
Air consumption [Nl/min]	90
Protection class	IP65
Operating principle	NC
Control voltage	24 VDC (adjusted) ± 10 %
Current consumption for vacuum and blow-off feature [mA]	30 (0.7 W)
Noise level [dB(A)]	68
Operating temperature [°C (°F)]	10 - 60 (50 - 140)
Weight [g]	130
Suitable connector cable	20.501 (p.410) 20.502 (p.410)

challenge accepted

info@hidrafluid.es
976 24 32 10

Pneumatic diagram

Solenoid valve NC

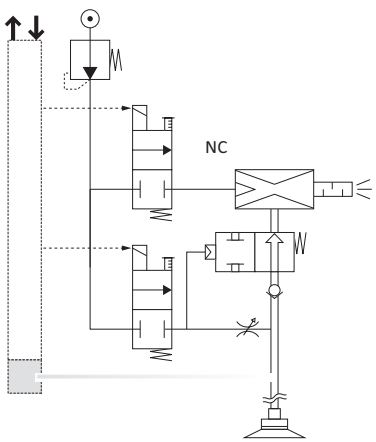

Solenoid valve NO

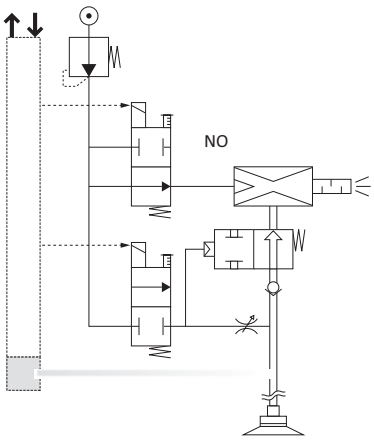

Operating principle EMA series

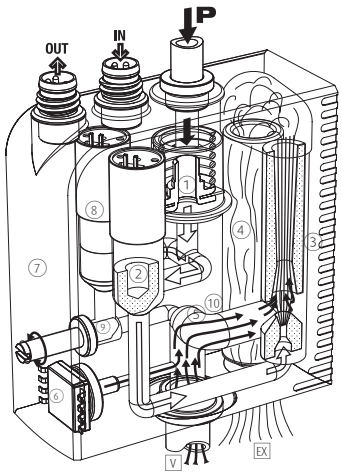

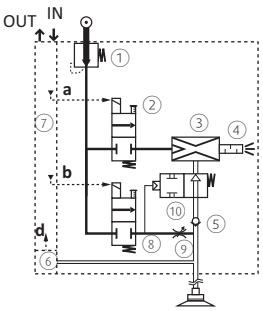

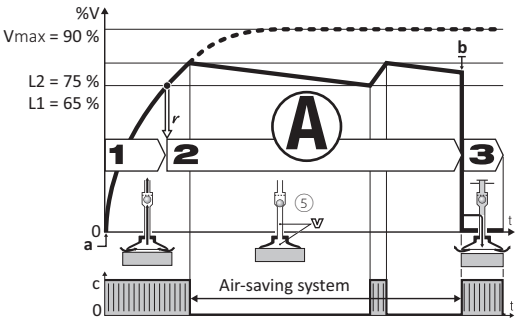

1. Gripping the workpiece
The vacuum solenoid valve ② starts the cycle. Venturi nozzle ③ is supplied with compressed air and generates the vacuum to grip the item quickly with the vacuum cup → short-term energy consumption.

2. Operations on the suctioned item
The vacuum level is continually monitored by the vacuum switch ⑥. When the vacuum threshold limit L1 (65 %) is reached the signal "Item gripped" is triggered. This gives a green light for the scheduled operation (transfer, processing, etc.). When the vacuum reaches the threshold limit L2 (75 %), the compressed air supply to the venturi nozzles via the solenoid valve ⑤ is interrupted. Energy consumption falls to zero. The item remains gripped because of the vacuum that remains because of the closed non-return valve. Tiny leakages often lead to a slow release of the vacuum. If the vacuum falls to the threshold limit of 65 %, new vacuum is briefly generated, i.e. until the threshold limit L2 (75 %) is reached.

3. Releasing the workpiece
At the end of the procedures blow-off is triggered. The blow-off valve ⑧ generates an air jet that closes the closing valve ⑩. This blows off the item using the air pressure regulator ⑨ so that it can be released more quickly.

Continued on the next page

info@hidrafluid.es
976 24 32 10

Nozzle diameter and energy-saving potential

Air-saving control cycle self-adaptation

Cycle 1:
Deals with an airtight product under the influence of LSA, resulting in optimum energy savings

Cycle 2:
The porous product generates leaks that provoke repeated intermittent vacuum regeneration. The anomaly is automatically detected and the cycle goes on without LSA. An LSA missing signal is emitted and displayed, and production goes on.

Cycle 3:
Illustrates the automatic return to the LSA cycle as soon as leaks are eliminated due to airtight products. Vacuum level will be maintained.

The compact-ejector EMA thus provides maximum energy saving, without any limitations to the performance and functioning of the overall production system.

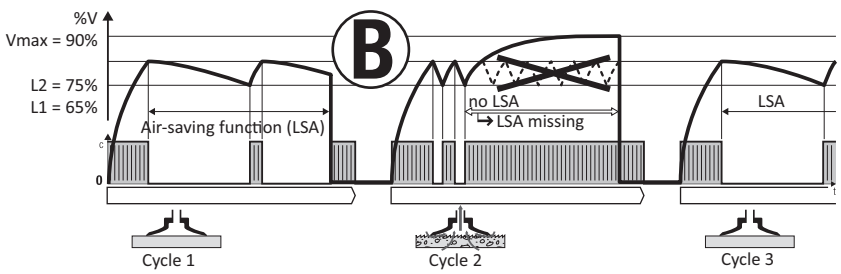

Without automatic air-saving system			With automatic air-saving system		
Nozzle diameter [mm]	Suction power [Nl/min]	Air consumption [Nl/min]	Suction duration (65 % vacuum) [sec]	Suction duration (75 % vacuum) [sec]	Air consumption [Nl/min]
1	29	44	2.38	3.33	2.2
1.2	45	65	1.53	2.15	2.2
1.4	70	90	0.99	1.38	2.2

> Automatic air-saving system activation allows a larger tube diameter to grip more quickly without increased consumption.

Example of the air-saving potential

The examples show how the automatic air-saving function reduces the energy demand:
> 75 % energy saved during product transfer
> 97 % energy saved during holding products while they are further processed or treated
The investment will often amortise itself within a couple of months.

Gripping + transfer (nozzle Ø 1.4 mm, evacuation of 0.2 l)

Phase	Duration	Air consumption		
		without "LSA"	with "LSA"	
Grip	0.28 s	0.4 Nl	0.4 Nl	air-saving potential
Transfer	1.20 s	1.8 Nl	0	
Placement	0.14 s	0.2 Nl	0.2 Nl	
		2.4 Nl →	0.6 Nl →	75 %

Fixation + operation process (nozzle Ø 1.4 mm, evacuation of 0.4 l)

Phase	Duration	Air consumption		
		without "LSA"	with "LSA"	
Fixation	0.55 s	0.8 Nl	0.8 Nl	air-saving potential
Operation process	60 s	90 Nl	0	
Placement	0.14 s	0.2 Nl	0.2 Nl	
		91 Nl →	1.0 Nl →	97 %

FIPA challenge accepted
info@hidrafluid.es
976 24 32 10

Wiring diagram

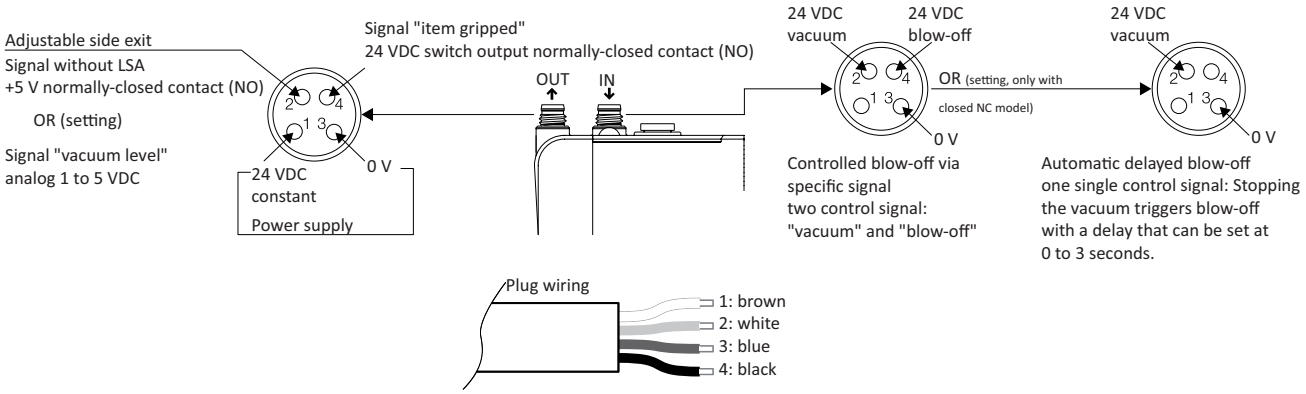

> Output signal "object gripped", 24 VDC, switching output NO, switching current 125 mA, PNP
> Adjustable side output:
1. Signal without air-saving function, +5 V switching output NO: e.g. signal for failure indication
2. Signal "vacuum level", analog, 1-5 VDC of measuring range

Dimensions and mounting options

> Mounting sideways

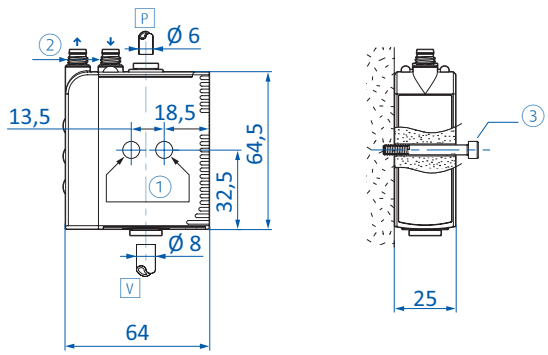

> Mounting in the front

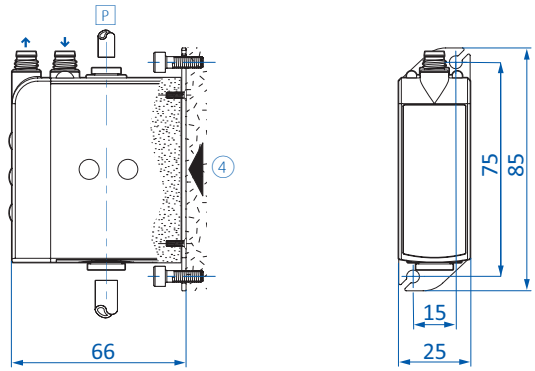

> Block mounting on a DIN rail

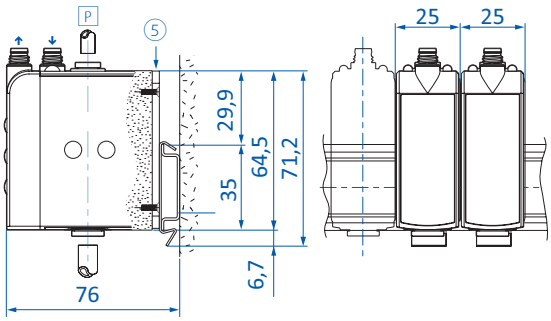

> EMA.FIX-B endpieces, with connecting screws and closing pins for collecting main

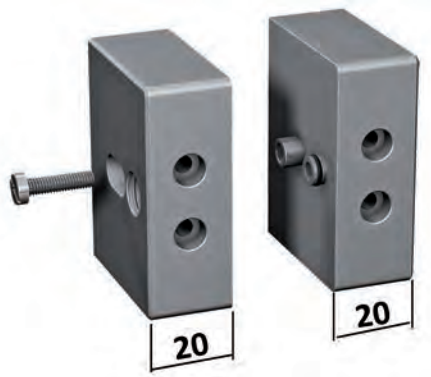

P = Compressed air connection V = Vacuum connection ① = 2 Bore holes for 4 mm screws ② = M8 plug ③ = 2 Continuous screws ④ = Mounting plate with 4 screws (Item no. EMM.FIX-V) ⑤ = Mounting plate for DIN rail with 4 screws (Item no. EMM.FIX-D) – on plate per EMM module

Evacuation time [sec.] for 1 liter at vacuum level

Item no.	55 %	60 %	65 %	70 %	75 %	80 %
EMA.90x14	0.73	0.85	0.99	1.16	1.38	1.7

info@hidrafluid.es
976 24 32 10

Open silencers for ejectors

Product notes

> Suitable for heavy-duty ejectors
> Open design, specially suitable for dusty, high-particle environments (e.g. wood industry)

Technical data

Item no.	Weight [g]
72.028	3
72.029	20
72.030	25
72.031	35
72.032	55
72.033	175

Dimensions

G	Ø D [mm]	Ø Di [mm]	L [mm]	L1 [mm]
G1/8	14	7	46	41
G1/4	20	11	73	65
G3/8	24	11	72	64
G1/2	30	17	128	121
G3/4	40	17	126	119
G1	49	26	126	119

Dimensions

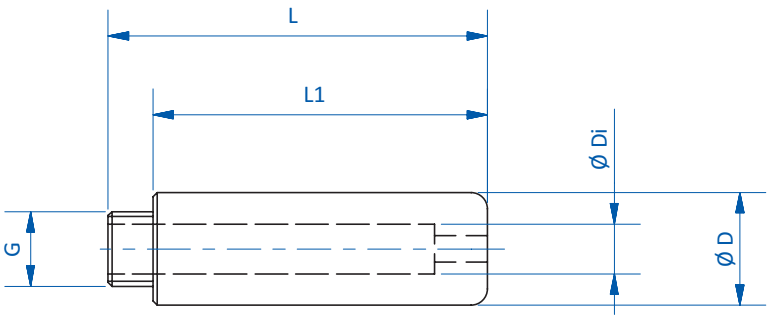

info@hidrafluid.es
976 24 32 10

Closed silencers for ejectors

Product notes

> Closed diffusor/silencer specially designed for dust-free environments
> Suitable for heavy-duty ejectors

Technical data

Item no.	Weight [g]
72.045	5
72.000	2
72.001	3.5
72.002	12
72.003	15
72.007	5.5
72.008	3
72.009	6.5

Dimensions

G1	Ø D [mm]	A [mm]	Ø B [mm]	C [mm]	Ø P [mm]
G1/8	--	41	18	6	--
G1/8	--	28	15.5	6	15.5
G1/4	--	38	17.5	8	17.5
G3/8	--	58	26	10	26.5
G1/2	--	66	29	12	29
--	4	30	--	11	10.5
--	6	34.5	--	11.5	15.5
--	8	48.5	--	17.5	17.5

Dimensions

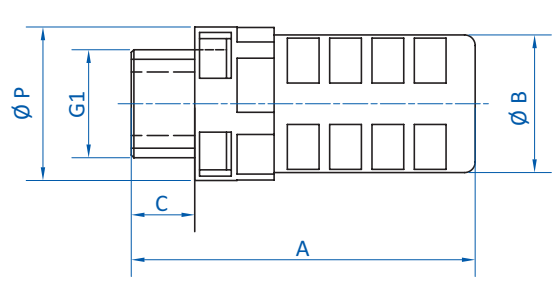

72.045 | 72.000 | 72.001 | 72.002 | 72.003

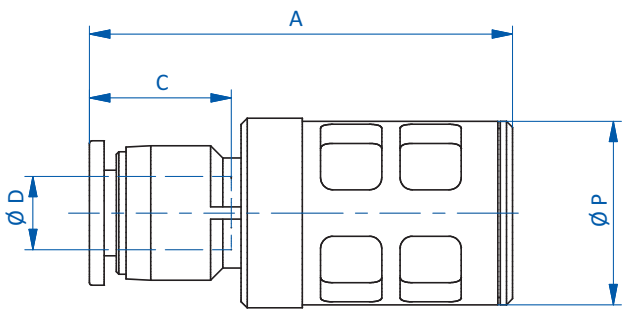

72.007 | 72.008 | 72.009

info@hidrafluid.es
976 24 32 10

Silencers with filter function

Series 1: brass construction with stainless steel wire fabric

Series 2: brass construction with sintered material

Product notes

> Combination of silencer and air filter
> 72.015 - 72.021: also suitable as protective filter for 3/2-way valves at ventilation/blow-off inlet (under contaminated environmental conditions)
> 72.022 - 72.027: can be mounted directly into the vacuum cup or the fitting, temperature-resistant up to 120 °C (248 °F)

Technical data

Item no.	Series	Weight [g]
72.015	1	2
72.016	1	6
72.017	1	10
72.018	1	15
72.019	1	25
72.020	1	38
72.021	1	56
72.022	2	1
72.023	2	3
72.024	2	6
72.025	2	12

Dimensions

G	B [mm]	Ø D [mm]	L [mm]	L1 [mm]	SW
M5	3.5	2.5	9.5	4	8
G1/8	4	6	14	6	13
G1/4	5	8.5	18.5	8	16
G3/8	6	11	19.5	8	19
G1/2	5	15	22.5	10	24
G3/4	6	20	25.5	10	30
G1	6.5	26	31	11.5	36
G1/8	--	5.5	4.5	3.5	--
G1/4	--	7	6.8	4.5	--
G3/8	--	9.5	6.8	5	--
G1/2	--	12	9	7	--

Dimensions

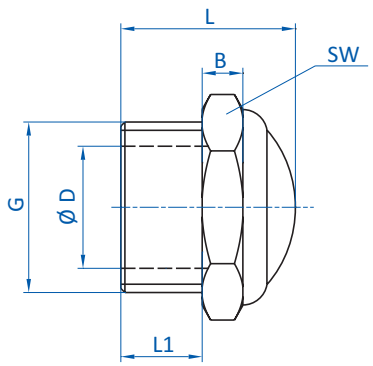

72.015 | 72.016 | 72.017 | 72.018 | 72.019 | 72.020 | 72.021

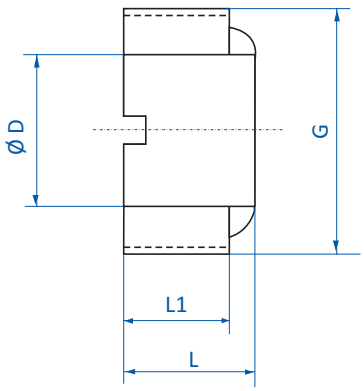

72.022 | 72.023 | 72.024 | 72.025

FIPA challenge accepted
info@hidrafluid.es
976 24 32 10

Electronics and sensors at a glance 403

Sensors 404

Cables and plugs 410

Reflective sensors 412

Signal transmitters 418

info@hidrafluid.es
976 24 32 10

Notes:

FIPA challenge accepted

info@hidrafluid.es
976 24 32 10

FIPA Electronics and sensors

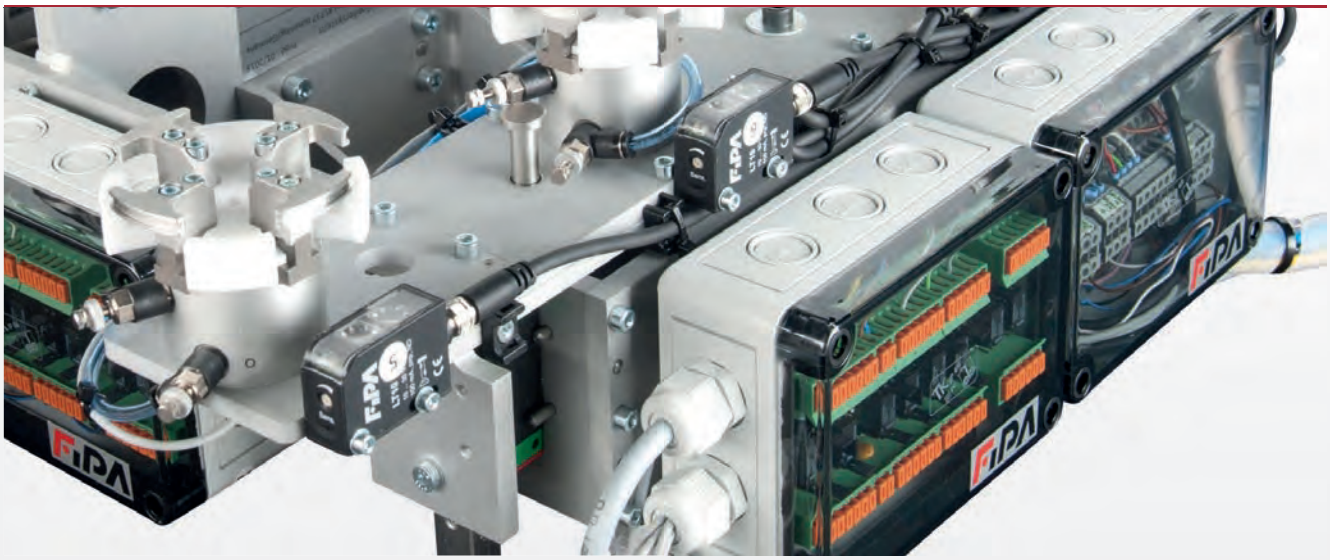

Magnetic and proximity sensors

> Sensors for active gripping elements, linear units, compact cylinders
> PNP or NPN switching functions
> With control LED

> See page 404

Connector cables and adapter plugs

> Connection of vacuum switches, sensors or ejectors
> Weather- and oil-resistant
> Jacks/plugs M8 or M12 size, 3, 4, or 5 wires

> See page 410

Reflective sensors and suitable mounting brackets

> Optical presence monitoring of workpiece
> Light or dark switching with LED-display
> Any mounting position

> See page 414

Signal transmitters and switchboxes

> Collection of sensor signals
> Either with or without logics (logic AND/OR)
> 2 - 12 inlets

> See page 419

info@hidrafluid.es
976 24 32 10

Magnetic sensors

Product notes

> C- and T-slot sensors for active gripping elements, linear units, compact cylinders
> PNP or NPN switching functions
> With control LED
> PNP-Sensors: connect supply voltage +Vs (mainly 24 V) with digital input signal
> NPN-Sensors: connect digital input signal with ground signal 0 V
> Cable and M8 3-pole plug included in scope of delivery
> Connector cable for sensors:
- 20.503: 3-pole M8, cable straight, length 2,500 mm, open wire
- 20.507: 3-pole M8, cable 90°, length 2,000 mm, open wire
- 20.570: 3-pole M8, length 1,500 mm, end with plug 3-pole M8

Technical data

Item no.	Nut-Model	Electric connection	Plug design	Operating voltage [VDC]	Max. switching current [mA]	Max. power consumption [W]	Protection class	Cable length [mm]	Operating temperature [°C [°F]]	Weight [g]	Suitable connector cable
GR04.198	C	PNP	Straight	6 - 30	200	6	IP67	300	-10 - 70 (14 - 158)	18	20.503 (p.410) 20.507 (p.410) 20.570 (p.410)
GR04.198/NPN	C	NPN	Straight	6 - 30	200	6	IP67	300	-10 - 70 (14 - 158)	18	20.503 (p.410) 20.507 (p.410) 20.570 (p.410)
GR04.202P	C	PNP	90° elbow	5 - 30	50	1.5	IP67	150	-10 - 70 (14 - 158)	25	20.503 (p.410) 20.507 (p.410) 20.570 (p.410)
GR04.202N	C	NPN	90° elbow	5 - 30	50	1.5	IP67	150	-10 - 70 (14 - 158)	25	20.503 (p.410) 20.507 (p.410) 20.570 (p.410)
GR04.280P	C	PNP	Straight, short	4.5 - 28	50	1.5	IP67	150	-10 - 70 (14 - 158)	21	20.503 (p.410) 20.507 (p.410) 20.570 (p.410)
GR04.280N	C	NPN	Straight, short	4.5 - 28	50	1.5	IP67	150	-10 - 70 (14 - 158)	21	20.503 (p.410) 20.507 (p.410) 20.570 (p.410)
GR04.199	T	PNP	Straight	10 - 30	100	3	IP67	150	-10 - 70 (14 - 158)	25	20.503 (p.410) 20.507 (p.410) 20.570 (p.410)

FIPA challenge accepted
info@hidrafluid.es
976 24 32 10

Technical data

Item no.	Nut-Model	Electric connection	Plug design	Operating voltage [VDC]	Max. switching current [mA]	Max. power consumption [W]	Protection class	Cable length [mm]	Operating temperature [°C (°F)]	Weight [g]	Suitable connector cable
GR04.199/NPN	T	NPN	Straight	10 - 30	100	3	IP67	150	-10 - 70 (14 - 158)	25	20.503 (p.410) 20.507 (p.410) 20.570 (p.410)
GR04.203P	T	PNP	Straight	5 - 30	200	6	IP67	150	-10 - 70 (14 - 158)	27	20.503 (p.410) 20.507 (p.410) 20.570 (p.410)
GR04.203N	T	NPN	Straight	5 - 30	200	6	IP67	150	-10 - 70 (14 - 158)	27	20.503 (p.410) 20.507 (p.410) 20.570 (p.410)

Wiring diagrams

PNP

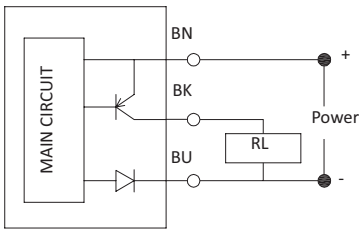

NPN

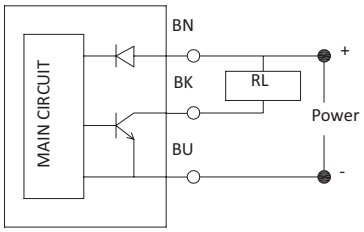

BN = Brown, BK = Black, BU = Blue

Plug assignment

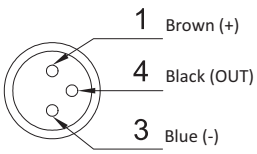

Continued on the next page

info@hidrafluid.es
976 24 32 10

Application example

Dimensions

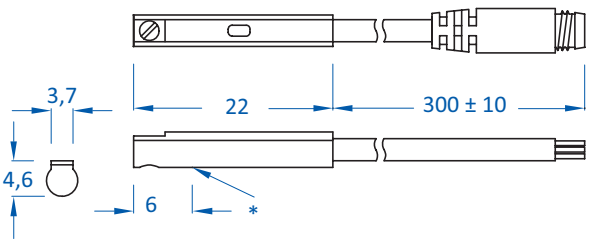

GR04.198 | GR04.198/NPN

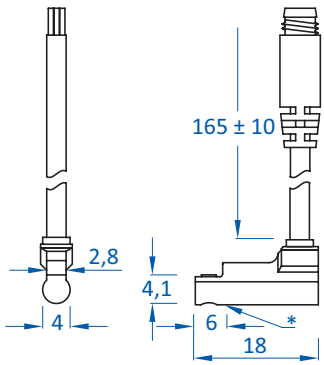

GR04.202P | GR04.202N

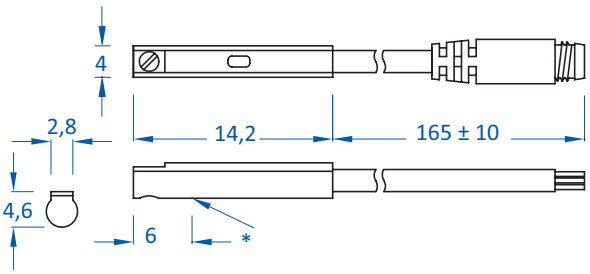

GR04.280P | GR04.280N

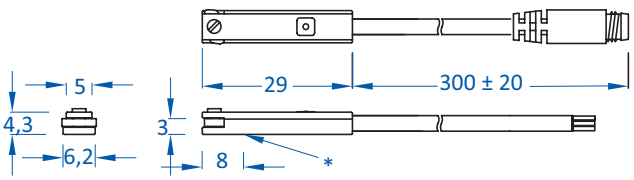

GR04.199 | GR04.199/NPN

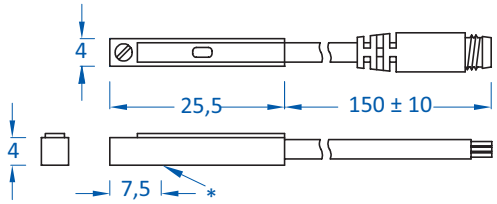

GR04.203P | GR04.203N

* = Sensing point

FIPA challenge accepted
info@hidrafluid.es
976 24 32 10

Matching nut dimensions

> GR04.198

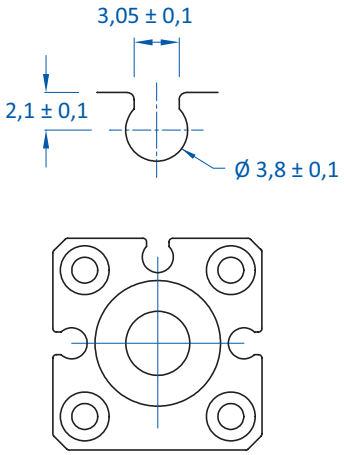

> GR04.202 | GR04.280

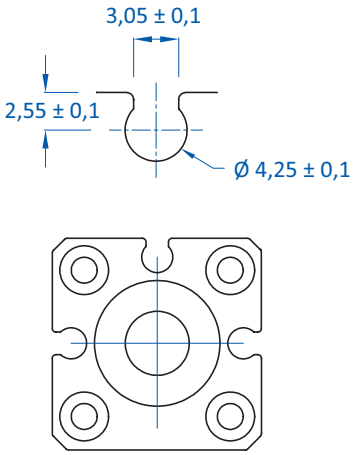

> GR04.203

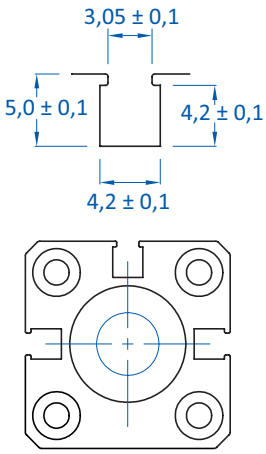

> GR04.199

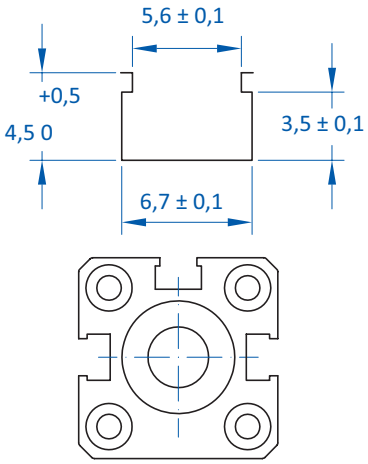

info@hidrafluid.es
976 24 32 10

Inductive sensors

GS04.001 | GS04.002

Product notes

> Sensors for sprue grippers or parallel grippers
> PNP or NPN switching functions
> Integrated control LED
> GS04.001, GS04.002: sensors for GR04.131D/E, GR04.140B; detection of jaw position (open/closed)

Included in scope of delivery:

> GR04.193P/N: 0.3 m cable, 3-pole, open wires (see accessories for suitable connectors for extension cables)
> GS04.001, GS04.002: 0.2 m cable and M8 3-pole plug
> GS04.003, GS04.004: 2 m cable, 3-pole, open wires

Technical data

Item no.	Electric connection	Operating voltage [VDC]	Max. switching current [mA]	Protection class	Operating temperature [°C (°F)]	Cable length [mm]	Weight [g]	Accessories
GS04.003	PNP	10 - 30	100	IP67	-25 - 70 (-13 - 158)	2,000	16	Connector cable: 20.503 (p.410) Connector cable: 20.507 (p.410)
GS04.004	NPN	10 - 30	100	IP67	-25 - 70 (-13 - 158)	2,000	16	Connector cable: 20.503 (p.410) Connector cable: 20.507 (p.410)
GR04.193P	PNP	10 - 30	200	IP67	-20 - 70 (-4 - 158)	200	25	Plug connector: 20.527 (p.411) Plug connector: 20.528 (p.411) Connector cable: 20.503 (p.410) Connector cable: 20.507 (p.410)
GR04.193N	NPN	10 - 30	200	IP67	-20 - 70 (-4 - 158)	200	25	Plug connector: 20.527 (p.411) Plug connector: 20.528 (p.411) Connector cable: 20.503 (p.410) Connector cable: 20.507 (p.410)
GS04.001	PNP	10 - 30	100	IP67	-20 - 70 (-4 - 158)	200	38	Connector cable: 20.503 (p.410) Connector cable: 20.507 (p.410)
GS04.002	NPN	10 - 30	100	IP67	-20 - 70 (-4 - 158)	200	38	Connector cable: 20.503 (p.410) Connector cable: 20.507 (p.410)

info@hidrafluid.es
976 24 32 10

Dimensions

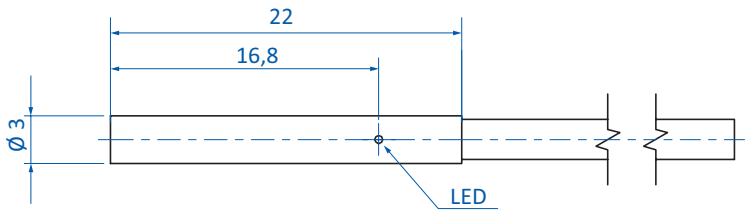

GS04.003 | GS04.004

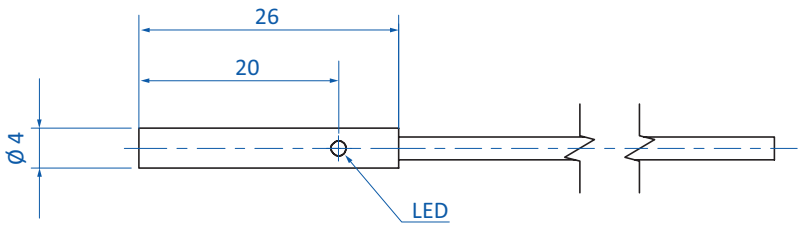

GR04.193P | GR04.193N

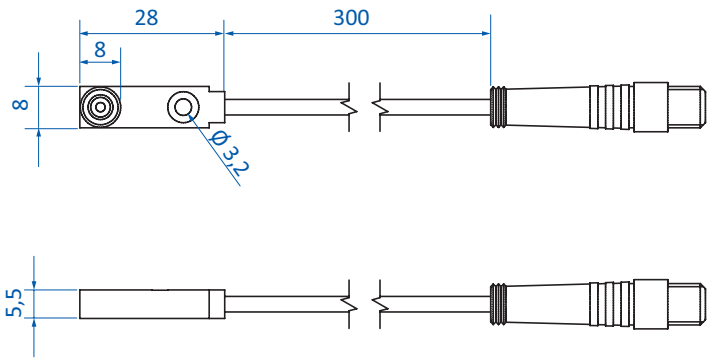

GS04.001 | GS04.002

info@hidrafluid.es
976 24 32 10

Connector cables M8, M12, 2 to 5-pin, material PUR

Product notes

> Electric connection of vacuum switches, sensors or ejectors
> Weather- and abrasion-resistant

Technical data

Item no.	Contact	Plug design	Cable length [mm]	Suitable for
20.503	Socket M8, 3-pin, open cable	Straight	2,000	Connection of sensors and sensor grippers
20.504	Plug M8, 3-pin 90°, socket M8, 3-pin	90° elbow	300	Connection of sensors and sensor grippers
20.507	Socket M8, 3-pin, open cable	90° elbow	2,000	Connection of sensors and sensor grippers
20.570	Plug M8, 3-pin, socket M8, 3-pin	Straight	1,500	Connection of sensors and sensor grippers
20.501	Socket M8, 4-pin, open cable	Straight	5,000	Connection of vacuum switches or compact ejectors
20.502	Plug M8, 4-pin, open cable	90° elbow	5,000	Connection of vacuum switches or compact ejectors
20.518	Socket M12, 4-pin, open cable	Straight	2,000	Connection of vacuum switches or compact ejectors
20.519	Socket M12, 4-pin, open cable	90° elbow	2,000	Connection of vacuum switches or compact ejectors
20.508	Socket M12, 5-pin, open cable	Straight	2,000	Connection of compact ejectors
20.509	Socket M12, 5-pin, open cable	90° elbow	2,000	Connection of compact ejectors
20.550	Special plug, 2-pin, open cable	Straight	1,500	Connection of base ejectors with blow-off boost EBA.08H.2-A

FIPA challenge accepted
info@hidrafluid.es
976 24 32 10

Plug connectors M8/3-pin

Technical data

Item no.	Electric connection	Weight [g]
20.527	Plug	5
20.528	Socket	5

Adapter plug

Product notes

> Adapter plug M8/3-pin, socket on M8/4-pin plug
> Adapter plug M8/4-pin, socket on M8/3-pin plug

Technical data

Item no.	Weight [g]
M8B3 / M8S4	10
M8B4 / M8S3	10

info@hidrafluid.es
976 24 32 10

Reflective sensors M18

LT19 DETECTS EVEN TRANSPARENT PLASTIC PARTS

LT19

LT18OHT (light sensor with background suppression, fixing nuts not displayed)

Product notes

> Sensors for optical presence monitoring of workpiece
> Light or dark switching with LED-display
> With or without background suppression
> Adjustable sensitivity
> Robust aluminum body
> Any mounting position

Two fixing nuts, tightening torque 20 Nm, included in scope of delivery

Technical data

Item no.	LT19	LT19/NPN	LT18OHT	LT18OHT/NPN
Adjustable range [mm]	70 - 400	70 - 400	70 - 400	70 - 400
Operating voltage [V]	6 - 30	6 - 30	10 - 36	10 - 36
Current consumption [mA]	< 30	< 30	< 25	< 25
Max. switching current [mA]	100	100	200	200
Protection class	IP67	IP67	IP67	IP67
Switching point principle	light / dark	light / dark	light	light
Background suppression	no	no	yes	yes
Ambient air temperature [°C (°F)]	-25 - 55 (-13 - 131)	-25 - 55 (-13 - 131)	-25 - 55 (-13 - 131)	-25 - 55 (-13 - 131)
Weight [g]	39	39	45	45
Suitable fittings	GR06.051 (p.240) GR06.051S-M18 (p.416)	GR06.051 (p.240) GR06.051S-M18 (p.416)	GR06.051 (p.240) GR06.051S-M18 (p.416)	GR06.051 (p.240) GR06.051S-M18 (p.416)

Application example

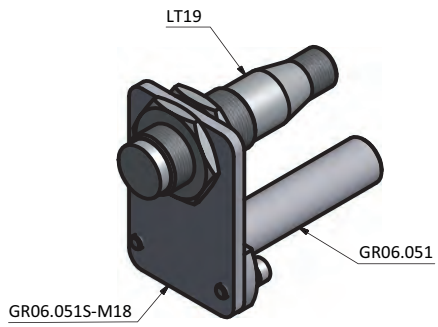

Sensor with mounting bracket

FIPA challenge accepted
info@hidrafluid.es
976 24 32 10

Dimensions

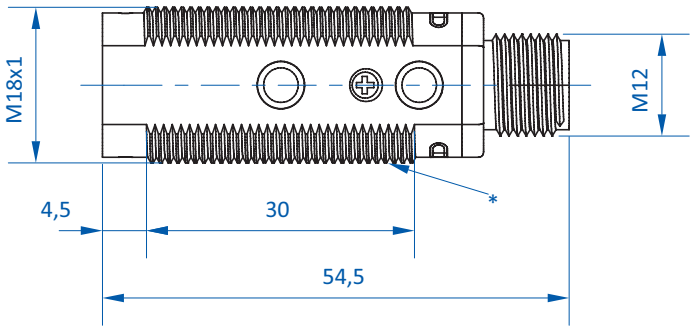

LT19 | LT19/NPN

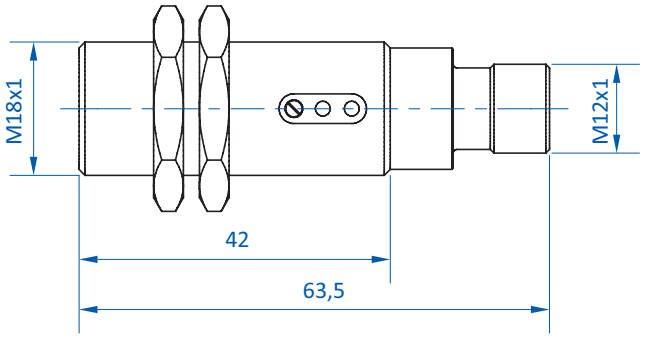

LT18OHT | LT18OHT/NPN

* = Fixing nuts not shown

info@hidrafluid.es
976 24 32 10

Reflective sensors – compact

Installation example with angle arm and rotatable mounting bracket GR06.045S

Product notes

> Sensors for optical presence monitoring of workpiece
> Long scanning range at small foot print
> Adjustable sensitivity
> LED-display
> Lightweight body
> Any mounting position
> Mounting bracket GR06.045S for angle variable installation on extrusions optionally available
> Connector cable for sensors:
- 20.503: 3-pole M8, length 2,500 mm, open wire
- 20.507: 3-pole M8, length 2,000 mm, end with socket 3-Pole M8 available

Technical data

Item no.	LT10	LT10/NPN
Adjustable range [mm]	0 - 600	0 - 600
Sensor	PNP	NPN
Operating voltage [V]	10 - 30	10 - 30
Current consumption [mA]	< 25	< 25
Max. switching current [mA]	100	100
Protection class	IP67	IP67
Background suppression	no	no
Ambient air temperature [°C (°F)]	-25 - 60 (-13 - 140)	-25 - 60 (-13 - 140)
Weight [g]	19	19
Accessories	Mounting bracket: GR06.045S (p.417) Connector cable: 20.503 (p.410) Connector cable: 20.507 (p.410)	Mounting bracket: GR06.045S (p.417) Connector cable: 20.503 (p.410) Connector cable: 20.507 (p.410)

Wiring diagrams

LT10

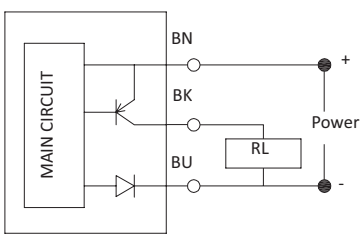

LT10/NPN

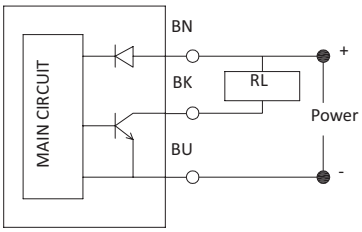

BN = Brown, BK = Black, BU = Blue

info@hidrafluid.es
976 24 32 10

Dimensions

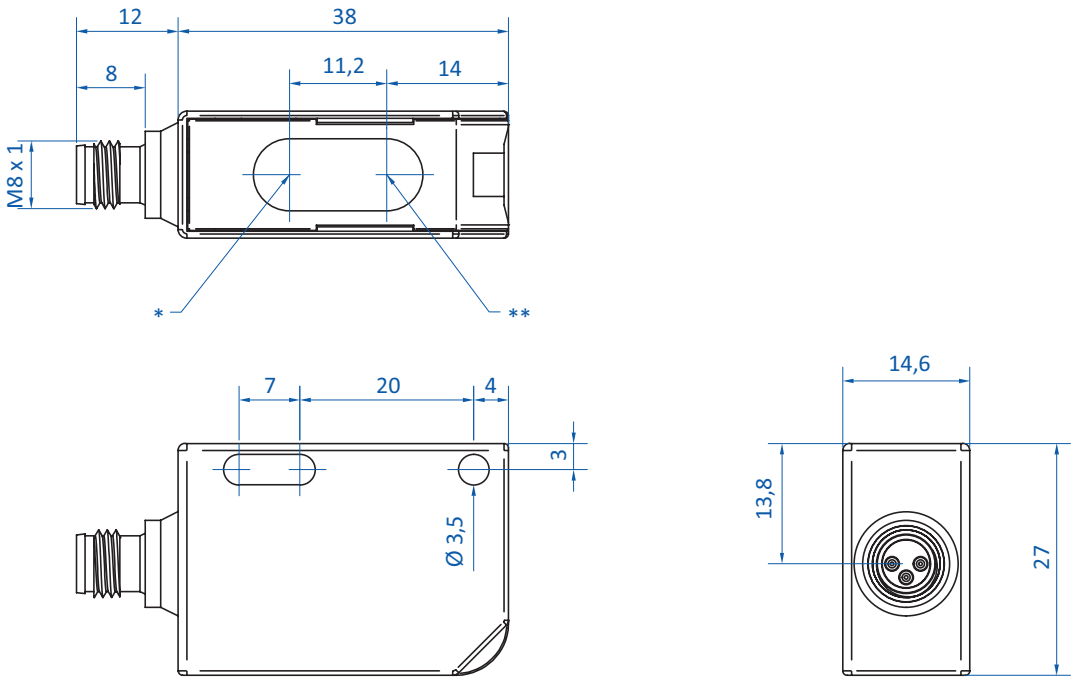

* = Opt. axis transmitter ** = Opt. axis receiver

info@hidrafluid.es
976 24 32 10

Mounting brackets for reflective sensors

SUITABLE FOR SENSORS WITH M8, M12 OR M18 MALE THREAD

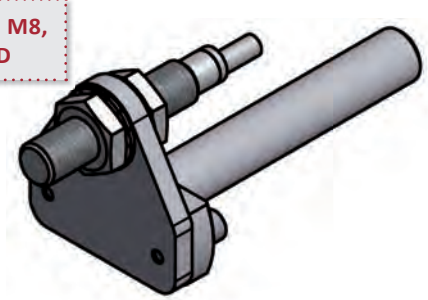

Application example with fitting GR06.050

Product notes

> Mounting bracket for part control
> Optional brackets with clamping shaft for mounting sensors to profiles

Technical data

Item no.	Suitable for	Weight [g]	Suitable fittings
GR06.050S-M8	Common M8 sensors	9	GR06.050 (p.240)
GR06.050S-M12	Common M12 sensors	9	GR06.050 (p.240)
GR06.051S-M18	LT18OHT, LT18OHT/NPN, LT19, LT19/NPN	23	GR06.051 (p.240)

Dimensions

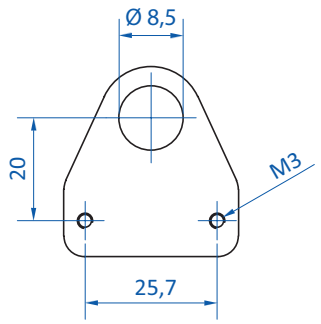

GR06.050S-M8

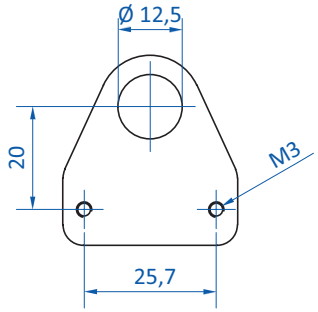

GR06.050S-M12

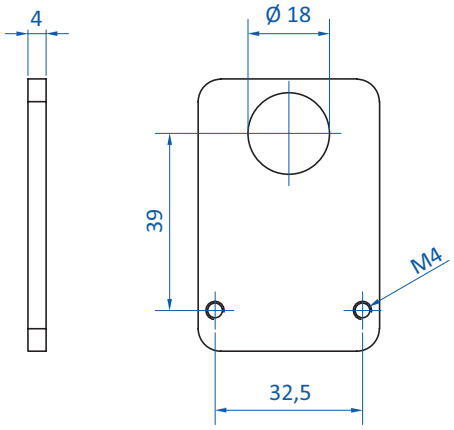

GR06.051S-M18

info@hidrafluid.es
976 24 32 10

Mounting brackets for compact sensors

FITS WITH MANY COMPACT SENSORS ON THE MARKET

Installation example with sensor LT10 and angle arm

Product notes

> Mounting bracket for sensor installation on extrusions
> Freely rotatable, when combined with angle arms or other gripper components with clamping diameter 10 mm
> A choice of suitable clamping elements can be found under accessories

Technical data

Item no.	Suitable for	Weight [g]
GR06.045S	Reflective sensor LT10, LT10/NPN; Profile - shaft - adapter GR01.110; Angle clamp GR02.010A; Cross clamp GR02.020; Angle arm GR02.070A; Quick-change systems GR02.240	23

Dimensions

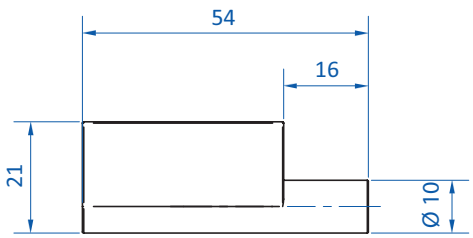

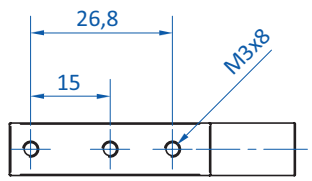

info@hidrafluid.es
976 24 32 10

Signal transmitters M8 – without logics

COLLECTION AND TRANSMISSION OF SENSOR SIGNALS

Product notes

> Transmits up to twelve sensor signals to the robot controller
> Suitable for PNP/NPN sensors or 2-pole actuators
> LED switching status display
> Signals can be coupled via the external robot controller
> Common output:
- 20.540: 8-pole M12 plug, 1.9 m, open end, wire color to DIN 47100/11.79
- 20.541 and 20.542: 15-pole D-sub-plug, cable length 2 m, open end, wire color to DIN 47100/11.79

Technical data

Item no.	Number of slots M8	Power supply [V]	Weight [g]
20.540	5	24	65
20.541	8	24	120
20.542	12	24	250

Pin assignment: M8 jack according to IEC 947-5-2

> Slot 0-7, or 0-11:
Signal line: socket 4
DC 24 V: socket 1
0 V: socket 3

Dimensions

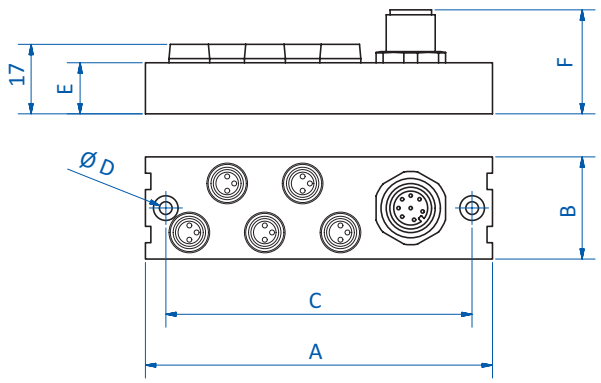

20.540

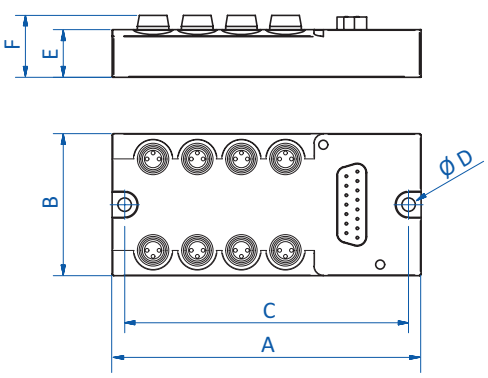

20.541 | 20.542

Item no.	A [mm]	B [mm]	C [mm]	Ø D [mm]	E [mm]	F [mm]
20.540	85	25	75	3.1	12.5	25.45
20.541	98	45	90	4.3	15.1	19.6
20.542	125.6	45	117.6	4.3	15.1	19.6

FIPA challenge accepted
info@hidrafluid.es
976 24 32 10

Sensor-relay-switchboxes

Product notes

> Reduction of necessary inputs on the robot control via bundling (series switching logic AND) of several sensor signals
> Inputs PNP, NPN or potential-free contact (NO or NC)
> Outputs PNP, NPN or potential-free contact (NO)
> Input LEDs for simplified troubleshooting
> Assembly on SLine, MLine or XLine extrusions
> Connection of several switchboxes possible
> Slot nuts and screws for SLine/MLine included in scope of delivery

Technical data

Item no.	Max. number of inputs	Max. number of outputs	Operating voltage [V]	Protection class	Weight [g]
GS01.004	4	4	24	IP65	180
GS01.006	6	6	24	IP65	171
GS01.008	8	8	24	IP65	230
GS01.012	12	12	24	IP65	325

Dimensions

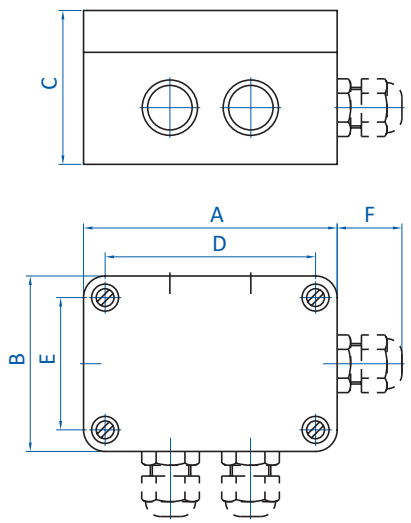

Item no.	A [mm]	B [mm]	C [mm]	D [mm]	E [mm]	F [mm]
GS01.004	94	65	57	79	50	25
GS01.006	94	94	57	79	79	25
GS01.008	130	94	57	115	79	25
GS01.012	180	94	57	165	79	25

info@hidrafluid.es
976 24 32 10

T-coupler bundlers with and/or logic

20.526

Product notes

> T-coupler connects 2x M8-female with 1x M8-male
> Interconnection of sensor signals on gripper systems
> Please note for 20.525 and 20.525/NPN:
If more than five sensors need to be connected we recommend to use switchboxes such as GS01.006 instead of T-couplers

Technical data

Item no.	Electric connection	Operating voltage [VDC]	Protection class	Logic	Weight [g]
20.524	PNP / NPN	24	IP67	2x or	15
20.525	PNP	24	IP67	2x and	15
20.525/NPN	NPN	24	IP67	2x and	15
20.526	PNP	10 - 35	IP67	2x and/or	25

Application example

info@hidrafluid.es
976 24 32 10

Dimensions

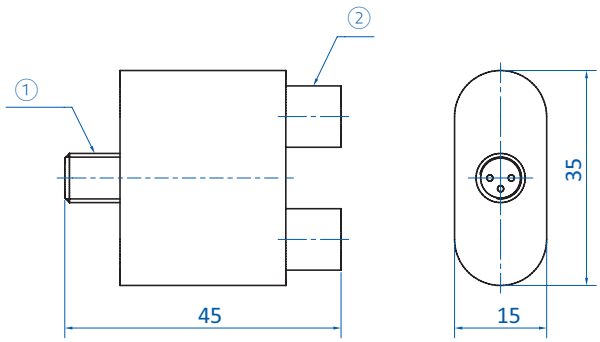

20.524 | 20.525 | 20.525/NPN

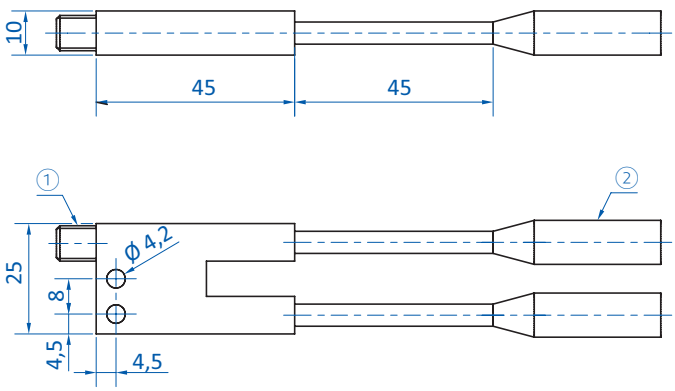

20.526

① = Plug, 3-pin M8x1 ② = Socket, 3-pin M8x1

Item no.	**A** [mm]	**B** [mm]	**C** [mm]
20.524	45	35	15
20.525	45	35	15
20.525/NPN	45	35	15
20.526	45	25	10

info@hidrafluid.es
976 24 32 10

Signal converters M8 / signal inverter M8

CONVERT SENSOR SIGNALS INDEPENDENT OF ROBOT CONTROLLER

Product notes

> Signal converter/signal inverter comes in two types:
  - PNP inverter 20.530 for grippers with indirect part detection
  - PNP-NPN converter 20.531 for using PNP sensors in NPN circuits
> LEDs to display status and switching state
> Using model 20.530 with grippers with indirect part detection, enables signal activation if a part has been gripped
> Recommended for use with grippers GR04.091, GR04.111A, GR04.130F

Technical data

Item no.	20.530	20.531
Input signal	PNP	PNP
Output signal	PNP	NPN
Connection	M8x1	M8x1
Max. ampacity [mA]	200	200
Operating voltage [VDC]	10 - 35	10 - 35
Current consumption [mA]	< 20	< 20
Max. switching frequency [Hz]	3,500	5,000
Minimum pulse duration [ms]	> 0.1	> 0.1
Protection class	IP67	IP67
Ambient air temperature [°C (°F)]	-25 - 70 (-13 - 158)	-25 - 70 (-13 - 158)
Weight [g]	17	17

Plug assignment

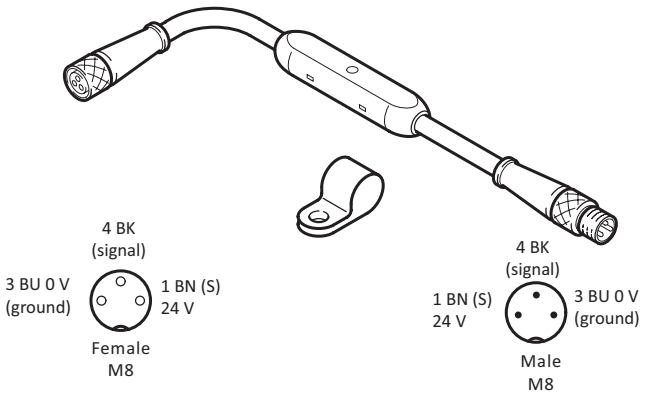

info@hidrafluid.es
976 24 32 10

Dimensions

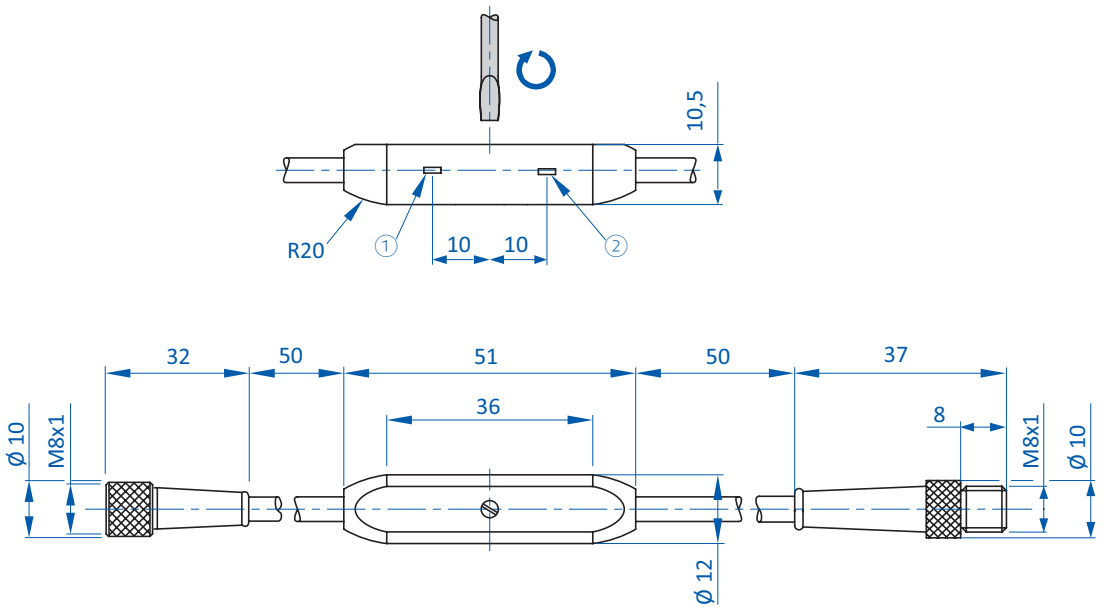

① = LED status ② = LED switching output

info@hidrafluid.es
976 24 32 10

Notes:

FIPA challenge accepted

info@hidrafluid.es
976 24 32 10

Tubing at a glance 426

Tubing 428

Accessories for tubing 432

Connectors at a glance 434

Vacuum manifolds 435

Push-in fittings and plug-in connectors – standard 437

Screw connectors and plug-in connectors – mini 449

Accessories 453

info@hidrafluid.es
976 24 32 10

FIPA Tubing

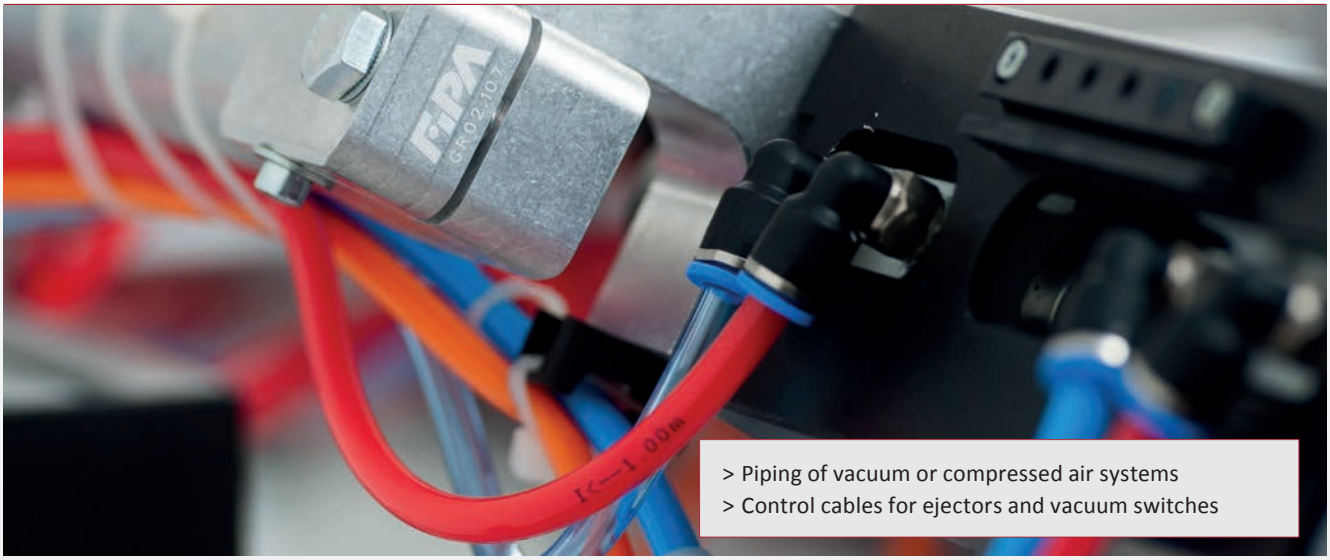

> Piping of vacuum or compressed air systems
> Control cables for ejectors and vacuum switches

Flexible vacuum pressure tubing made from polyurethane (PUR)

> Very small bending radius
> Standard blue transparent or intransparent

61.090 - 61.096
> High chemical stability and mechanical resistance
> Outer diameter toleranced tubing, making them suitable for quick fittings

61.056 - 61.062
> Available in a wide range of colors
> Outer diameter toleranced tubing, making them suitable for quick fittings

61.020 - 61.030
> Suitable for use in trailing chains, corrugated external surface

61.005S - 61.011S
> Self-extinguishing, flame-resistant according to DIN 4102 B1, corrugated external surface

> See page 428

Vacuum and pressure tubing made from transparent fluororesin (PFA)

> Excellent resistance to chemicals, temperature and weather conditions
> Used predominantly in chemical, foodstuff and medical industries

> See page 430

Highly flexible, soft PVC tubing for pressure applications

> Suitable for frequently occurring pivoting motions and oscillations
> Not suitable for vacuum

> See page 431

info@hidrafluid.es
976 24 32 10

FIPA Tubing

Accessories:

Tubing nipples with male M and G threads

> See page 432

Reinforcing sleeves, especially for soft tubings

> See page 433

Tubing cutter with measuring tape

> See page 433

info@hidrafluid.es
976 24 32 10

Flexible vacuum and pressure tubing made from PUR blue transparent

SUITABLE FOR INSTALLATION IN DRAG CHAINS

Product notes

> High flexibility enables small bending curve to build compact tubing systems
> Suitable for air and tap water
> Cut marks at 500 mm intervals facilitate installation
> High chemical and mechanical resistance
> Very high oil resistance
> Rule of thumb for installation in drag chain: bending radius = 10 x outer diameter of tubing

Technical data

Item no.	Outer diameter [mm]	Inner diameter [mm]	Minimum bending radius [mm]	Pressure range [bar (psi)]	Operating pressure 20 °C (68 °F) [bar (psi)]	Usage temperature [°C (°F)]	Weight [g/m]	Packing unit [m]
61.090	3	2	8	-1 - 8 (-14.5 - 116)	29 (420.6)	-15 - 60 (5 - 140)	7	20
61.091	4	2.5	10	-1 - 8 (-14.5 - 116)	29 (420.6)	-15 - 60 (5 - 140)	9	20
61.092	6	4	15	-1 - 8 (-14.5 - 116)	29 (420.6)	-15 - 60 (5 - 140)	19	20
61.093	8	5	15	-1 - 8 (-14.5 - 116)	29 (420.6)	-15 - 60 (5 - 140)	36	20
61.094	10	6.5	20	-1 - 8 (-14.5 - 116)	29 (420.6)	-15 - 60 (5 - 140)	54	20
61.096	12	9	30	-1 - 8 (-14.5 - 116)	29 (420.6)	-15 - 60 (5 - 140)	68	20

FIPA challenge accepted

info@hidrafluid.es
976 24 32 10

Flexible vacuum and pressure tubing made of blue PUR

SUITABLE FOR INSTALLATION IN DRAG CHAINS

Product notes

> High flexibility enables small bending curve to build compact tubing systems
> Suitable for air and tap water
> Cut marks at 500 mm intervals facilitate installation
> Rule of thumb for installation in drag chain: bending radius = 10 x outer diameter of tubing

Ordering notes

> Standard length 20 m, color blue
> Available in various tubing lengths and a wide selection of colors (black, red, orange, ocher, yellow, green, blue, light blue, transparent, pure white)
> 61.062 standard color is black
> Length of 50 m generally only available in black

Technical data

Item no.	Outer diameter [mm]	Inner diameter [mm]	Minimum bending radius [mm]	Pressure range [bar (psi)]	Operating pressure 20 °C (68 °F) [bar (psi)]	Usage temperature [°C (°F)]	Weight [g/m]	Packing unit [m]
61.056	3	2	8	-1 - 8 (-14.5 - 116)	29 (420.6)	-15 - 60 (5 - 140)	7	20 / 50 / 100
61.057	4	2.5	10	-1 - 8 (-14.5 - 116)	29 (420.6)	-15 - 60 (5 - 140)	9	20 / 50 / 100
61.058	6	4	15	-1 - 8 (-14.5 - 116)	29 (420.6)	-15 - 60 (5 - 140)	19	20 / 50 / 100
61.059	8	5	15	-1 - 8 (-14.5 - 116)	29 (420.6)	-15 - 60 (5 - 140)	36	20 / 50 / 100
61.060	10	6.5	20	-1 - 8 (-14.5 - 116)	29 (420.6)	-15 - 60 (5 - 140)	54	20 / 50 / 100
61.061	12	8	30	-1 - 8 (-14.5 - 116)	29 (420.6)	-15 - 60 (5 - 140)	74	20 / 50 / 100
61.062	16	11	60	-1 - 8 (-14.5 - 116)	29 (420.6)	-15 - 60 (5 - 140)	128	20 / 50 / 100

info@hidrafluid.es
976 24 32 10

Vacuum and pressure tubing made of transparent fluororesin (PFA)

FOR CHEMICAL, FOODSTUFF AND MEDICAL INDUSTRIES

Product notes

> Excellent resistance to chemicals, temperature and weather conditions
> Very smooth, transparent inner surface
> Suitable for air, water and corrosive fluids
> 61.069 to 61.073: suitable for cleanroom applications

Ordering notes

> Standard packaging unit: 5 meters

Technical data

Item no.	Outer diameter [mm]	Inner diameter [mm]	Minimum bending radius [mm]	Pressure range for air / gas [bar (psi)]	Pressure range for liquids [bar (psi)]	Operating pressure 20 °C (68 °F) [bar (psi)]	Usage temperature [°C (°F)]	Weight [g/m]	Packing unit [m]
61.063	4	2.5	20	-0.99 - 9 (-14.4 - 130.5)	3 (43.5)	49 (710.7)	-65 - 260 (-85 - 500)	18	5 / 20
61.064	6	4	30	-0.99 - 9 (-14.4 - 130.5)	3 (43.5)	49 (710.7)	-65 - 260 (-85 - 500)	36	5 / 20
61.065	8	6	48	-0.99 - 9 (-14.4 - 130.5)	3 (43.5)	39 (565.6)	-65 - 260 (-85 - 500)	50	5 / 20
61.066	10	7.5	60	-0.99 - 9 (-14.4 - 130.5)	3 (43.5)	39 (565.6)	-65 - 260 (-85 - 500)	78	5 / 20
61.067	12	9	72	-0.99 - 9 (-14.4 - 130.5)	3 (43.5)	59 (855.7)	-65 - 260 (-85 - 500)	112	5 / 20
61.068	16	13	78	-0.99 - 9 (-14.4 - 130.5)	3 (43.5)	34 (493.1)	-65 - 260 (-85 - 500)	154	5 / 20
61.069	4	2.5	20	-0.99 - 9 (-14.4 - 130.5)	3 (43.5)	49 (710.7)	-65 - 260 (-85 - 500)	55	5
61.070	6	4	30	-0.99 - 9 (-14.4 - 130.5)	3 (43.5)	49 (710.7)	-65 - 260 (-85 - 500)	95	5
61.071	8	6	30	-0.99 - 9 (-14.4 - 130.5)	3 (43.5)	39 (565.6)	-65 - 260 (-85 - 500)	125	5
61.072	10	7.5	60	-0.99 - 9 (-14.4 - 130.5)	3 (43.5)	39 (565.6)	-65 - 260 (-85 - 500)	190	5
61.073	12	9	72	-0.99 - 9 (-14.4 - 130.5)	3 (43.5)	39 (565.6)	-65 - 260 (-85 - 500)	270	5

FIPA challenge accepted

info@hidrafluid.es
976 24 32 10

Highly flexible tubing made of soft PVC for light pressure applications

SUITABLE FOR FOODSTUFFS

Product notes

> Unpressurized and low-pressure applications with concurrent pivoting motions and oscillations
> High flexibility enables sharp turning radii for compact tubing systems
> FDA approval for aqueous foods
> Extremely resistant to acids and bases
> Color transparent
> Not suitable for vacuum

Technical data

Item no.	Outer diameter [mm]	Inner diameter [mm]	Minimum bending radius [mm]	Pressure range [bar (psi)]	Usage temperature [°C (°F)]	Weight [g/m]	Packing unit [m]
61.211	4	2	5	0 - 1 (0 - 14.5)	-10 - 60 (14 - 140)	9	20
61.212	6	4	14	0 - 1 (0 - 14.5)	-5 - 60 (23 - 140)	17	20
61.213	8	6	25	0 - 0.5 (0 - 7.3)	-5 - 60 (23 - 140)	23	20
61.214	10	7	25	0 - 0.5 (0 - 7.3)	-10 - 60 (14 - 140)	36	20

info@hidrafluid.es
976 24 32 10

Tubing nipples with external thread

Product notes

> Select the tubing inner diameter about 1 - 2 mm smaller than the tubing nipple

Technical data

Item no.	For hose inner Ø [mm]	Material
62.062	4	Brass
62.063	6	Brass

Dimensions

G1	SW
M5	7
M5	7

FIPA challenge accepted

info@hidrafluid.es
976 24 32 10

Reinforcing sleeves

Material: stainless steel

Product notes

> We recommend the use of reinforcing for all soft tubing
> Reinforced sleeves also recommended for water transportation

Technical data

Item no.	Hose outer Ø [mm]	Hose inner Ø [mm]
WR 0425	4	2.5
WR 0640	6	4
WR 0850	8	5
WR 0860	8	6
WR 1280	12	8
WR 1290	12	9
WR 1613	16	13

Tubing cutter with measuring tape

Technical data

Item no.	Compatible hose Ø [mm]
61.083	3 - 16

info@hidrafluid.es
976 24 32 10

FIPA Push-in fittings

Vacuum manifolds

> Construction of vacuum systems by means of simple installation of push-in fittings or quick fittings
> Inlets on one or both sides
> Up to six inlets or outlets, male and female threads from M5 to G1 1/4
> Design: aluminum or brass

> See page 435

Push-in fittings and plug-in connectors – standard

> Suitable for vacuum and pressure applications (-1 - 10 bar)
> M, G and R male and female threads, straight or 90° version
> T- and Y-manifolds, 2-way and 3-way angle swivel screw connections
> Stackable plug-in connector (QC-3-3M - QC 8-8)
> Lock connection push-in connectors 30.761 - 20.765 (straight); 30.774 - 30.778 (90°): locking of compressed air or vacuum during hose disassembly, release after reconnection
> Rotation screw connections for mounting in with fast-running machines

> See page 437

Push-in fittings and plug-in connectors – mini

> Suitable for vacuum and pressure applications (-1 - 10 bar)
> 40 % smaller than standard version
> M, R and G male and female threads, straight, 45° or 90° version
> T-manifold
> Easy assembly and disassembly thanks to elliptical mini release ring

> See page 449

Accessories

> Double nipples
> Thread adapters
> Threaded sockets
> Screw plugs
> Sealing rings

> See page 453

info@hidrafluid.es
976 24 32 10

Manifolds for simple assembly of vacuum loads

Outputs on one side, at the front

Product notes

> Construction of vacuum systems by means of simple installation of push-in fittings or quick fittings
> Material: aluminum

Technical data

Item no.	Input connection	Output connection	Suitable sealing plugs
79.000	2x 1/8	2x M5	77.000 (p.455), 77.009 (p.455)
79.001	2x 1/8	4x M5	77.000 (p.455), 77.009 (p.455)
79.002	2x 1/8	6x M5	77.000 (p.455), 77.009 (p.455)
79.003	2x 1/4	2x 1/8	77.008 (p.455), 77.009 (p.455)
79.004	2x 1/4	4x 1/8	77.008 (p.455), 77.009 (p.455)
79.005	2x 1/4	6x 1/8	77.008 (p.455), 77.009 (p.455)
79.006	2x 3/8	2x 1/4	77.008 (p.455), 77.010 (p.455)
79.007	2x 3/8	4x 1/4	77.008 (p.455), 77.010 (p.455)
79.008	2x 3/8	6x 1/4	77.008 (p.455), 77.010 (p.455)
79.009	2x 3/8	2x 1/4	77.009 (p.455), 77.010 (p.455)
79.010	2x 3/8	4x 1/8	77.009 (p.455), 77.010 (p.455)
79.011	2x 3/8	6x 1/8	77.009 (p.455), 77.010 (p.455)
79.012	2x 1/2	2x 1/4	77.007 (p.455), 77.008 (p.455)
79.013	2x 1/2	4x 1/4	77.007 (p.455), 77.008 (p.455)
79.014	2x 1/2	6x 1/4	77.007 (p.455), 77.008 (p.455)

Dimensions

A [mm]	B [mm]	C [mm]	L [mm]
20	15	15	45
20	15	15	75
20	15	15	105
30	15	30	60
30	15	30	120
30	15	30	180
40	18	36	72
30	18	36	144
30	18	36	216
40	18	30	72
30	18	30	126
30	18	30	186
40	22	36	80
40	22	36	152
40	22	36	224

Dimensions

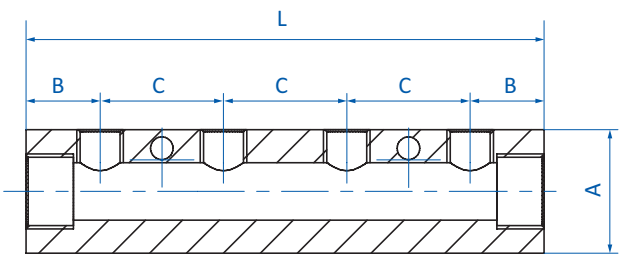

info@hidrafluid.es
976 24 32 10

Manifolds for simple assembly of vacuum loads

Outputs on both sides, at the front and rear

Product notes

> Construction of vacuum systems by means of simple installation of push-in fittings or quick fittings
> Material: aluminum

Technical data

Item no.	Input connection	Output connection	Suitable sealing plugs
79.015	2x 1/8	2+2 x M5	77.000 (p.455) 77.009 (p.455)
79.016	2x 1/8	4+4 x M5	77.000 (p.455) 77.009 (p.455)
79.017	2x 1/4	2+2 x 1/8	77.008 (p.455) 77.009 (p.455)
79.018	2x 1/4	4+4 x 1/8	77.008 (p.455) 77.009 (p.455)
79.019	2x 3/8	2+2 x 1/4	77.008 (p.455) 77.010 (p.455)
79.020	2x 3/8	4+4 x 1/4	77.008 (p.455) 77.010 (p.455)
79.023	2x 1/2	2+2 x 1/4	77.007 (p.455) 77.008 (p.455)
79.024	2x 1/2	4+4 x 1/4	77.007 (p.455) 77.008 (p.455)

Dimensions

A [mm]	B [mm]	C [mm]	L [mm]
20	15	15	45
20	15	15	75
30	15	30	60
30	15	30	120
40	18	36	72
40	18	36	144
40	22	36	80
40	22	36	152

Dimensions

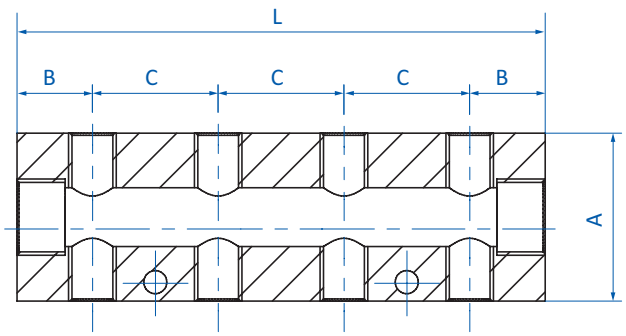

FIPA challenge accepted
info@hidrafluid.es
976 24 32 10

Straight male stud connectors

Item no.	Pressure range [bar (psi)]	Operating temperature [°C (°F)]	Technical data	Dimensions
			Ø D [mm]	G
30.000	-0.95 - 15 (-13.8 - 217.6)	0 - 60 (32 - 140)	4	M5
30.001	-0.95 - 15 (-13.8 - 217.6)	0 - 60 (32 - 140)	4	M6
30.002	-0.95 - 15 (-13.8 - 217.6)	0 - 60 (32 - 140)	4	R1/8
30.003	-0.95 - 15 (-13.8 - 217.6)	0 - 60 (32 - 140)	4	R1/4
30.004	-0.95 - 15 (-13.8 - 217.6)	0 - 60 (32 - 140)	6	M5
30.005	-0.95 - 15 (-13.8 - 217.6)	0 - 60 (32 - 140)	6	M6
30.006	-0.95 - 15 (-13.8 - 217.6)	0 - 60 (32 - 140)	6	R1/8
30.007	-0.95 - 15 (-13.8 - 217.6)	0 - 60 (32 - 140)	6	R1/4
30.008	-0.95 - 15 (-13.8 - 217.6)	0 - 60 (32 - 140)	6	R3/8
30.009	-0.95 - 15 (-13.8 - 217.6)	0 - 60 (32 - 140)	8	R1/8
30.010	-0.95 - 15 (-13.8 - 217.6)	0 - 60 (32 - 140)	8	R1/4
30.011	-0.95 - 15 (-13.8 - 217.6)	0 - 60 (32 - 140)	8	R3/8
30.002-G	-0.95 - 15 (-13.8 - 217.6)	-20 - 80 (-4 - 176)	4	G1/8
30.003-G	-0.95 - 15 (-13.8 - 217.6)	-20 - 80 (-4 - 176)	4	G1/4
30.006-G	-0.95 - 15 (-13.8 - 217.6)	-20 - 80 (-4 - 176)	6	G1/8
30.007-G	-0.95 - 15 (-13.8 - 217.6)	-20 - 80 (-4 - 176)	6	G1/4
30.008-G	-0.95 - 15 (-13.8 - 217.6)	-20 - 80 (-4 - 176)	6	G3/8
30.011-G	-0.95 - 15 (-13.8 - 217.6)	-20 - 80 (-4 - 176)	8	G3/8

info@hidrafluid.es
976 24 32 10

Cartridge male stud connectors, round, hex key

Technical data			Dimensions	
Item no.	Pressure range [bar (psi)]	Operating temperature [°C (°F)]	Ø D [mm]	G
30.200	-0.95 - 15 (-13.8 - 217.6)	0 - 60 (32 - 140)	4	M5
30.201	-0.95 - 15 (-13.8 - 217.6)	0 - 60 (32 - 140)	4	M6
30.202	-0.95 - 15 (-13.8 - 217.6)	0 - 60 (32 - 140)	4	R1/8
30.203	-0.95 - 15 (-13.8 - 217.6)	0 - 60 (32 - 140)	6	M5
30.204	-0.95 - 15 (-13.8 - 217.6)	0 - 60 (32 - 140)	6	M6
30.205	-0.95 - 15 (-13.8 - 217.6)	0 - 60 (32 - 140)	6	R1/8
30.206	-0.95 - 15 (-13.8 - 217.6)	0 - 60 (32 - 140)	6	R1/4
30.207	-0.95 - 15 (-13.8 - 217.6)	0 - 60 (32 - 140)	8	R1/8
30.208	-0.95 - 15 (-13.8 - 217.6)	0 - 60 (32 - 140)	8	R1/4
30.209	-0.95 - 15 (-13.8 - 217.6)	0 - 60 (32 - 140)	8	R3/8

Straight male stud connectors with cut-off valve

Locking of compressed air or vacuum during disassembly, release after reconnection

Technical data				Dimensions	
Item no.	Effective passage area [mm²]	Pressure range [bar (psi)]	Operating temperature [°C (°F)]	Ø D [mm]	G
30.761	1.6	-0.95 - 15 (-13.8 - 217.6)	0 - 60 (32 - 140)	4	M5
30.762	2	-0.95 - 15 (-13.8 - 217.6)	0 - 60 (32 - 140)	4	R1/8
30.763	2.3	-0.95 - 15 (-13.8 - 217.6)	0 - 60 (32 - 140)	6	M5
30.764	7.3	-0.95 - 15 (-13.8 - 217.6)	0 - 60 (32 - 140)	6	R1/8
30.765	7.3	-0.95 - 15 (-13.8 - 217.6)	0 - 60 (32 - 140)	6	R1/4

FIPA challenge accepted

info@hidrafluid.es
976 24 32 10

Female stud connectors

Technical data			Dimensions	
Item no.	Pressure range [bar (psi)]	Operating temperature [°C (°F)]	Ø D [mm]	G
30.050	-0.95 - 15 (-13.8 - 217.6)	0 - 60 (32 - 140)	4	R1/8
30.051	-0.95 - 15 (-13.8 - 217.6)	0 - 60 (32 - 140)	4	R1/4
30.052	-0.95 - 15 (-13.8 - 217.6)	0 - 60 (32 - 140)	6	R1/8
30.053	-0.95 - 15 (-13.8 - 217.6)	0 - 60 (32 - 140)	6	R1/4
30.054	-0.95 - 15 (-13.8 - 217.6)	0 - 60 (32 - 140)	8	R1/8
30.055	-0.95 - 15 (-13.8 - 217.6)	0 - 60 (32 - 140)	8	R1/4
30.056	-0.95 - 15 (-13.8 - 217.6)	0 - 60 (32 - 140)	8	R3/8

Straight tube connectors – equal

Technical data			Dimensions
Item no.	Pressure range [bar (psi)]	Operating temperature [°C (°F)]	Ø D [mm]
30.223	-0.95 - 15 (-13.8 - 217.6)	0 - 60 (32 - 140)	4
30.224	-0.95 - 15 (-13.8 - 217.6)	0 - 60 (32 - 140)	6
30.225	-0.95 - 15 (-13.8 - 217.6)	0 - 60 (32 - 140)	8

Straight tube reducers

Technical data			Dimensions	
Item no.	Pressure range [bar (psi)]	Operating temperature [°C (°F)]	Ø D1 [mm]	Ø D2 [mm]
30.075	-0.95 - 15 (-13.8 - 217.6)	0 - 60 (32 - 140)	6	4
30.076	-0.95 - 15 (-13.8 - 217.6)	0 - 60 (32 - 140)	8	6

info@hidrafluid.es
976 24 32 10

90° elbow male connectors

Technical data			Dimensions	
Item no.	Pressure range [bar (psi)]	Operating temperature [°C (°F)]	Ø D [mm]	G
30.100	-0.95 - 15 (-13.8 - 217.6)	0 - 60 (32 - 140)	4	M5
30.101	-0.95 - 15 (-13.8 - 217.6)	0 - 60 (32 - 140)	4	M6
30.102	-0.95 - 15 (-13.8 - 217.6)	0 - 60 (32 - 140)	4	R1/8
30.103	-0.95 - 15 (-13.8 - 217.6)	0 - 60 (32 - 140)	4	R1/4
30.104	-0.95 - 15 (-13.8 - 217.6)	0 - 60 (32 - 140)	6	M5
30.105	-0.95 - 15 (-13.8 - 217.6)	0 - 60 (32 - 140)	6	M6
30.106	-0.95 - 15 (-13.8 - 217.6)	0 - 60 (32 - 140)	6	R1/8
30.107	-0.95 - 15 (-13.8 - 217.6)	0 - 60 (32 - 140)	6	R1/4
30.108	-0.95 - 15 (-13.8 - 217.6)	0 - 60 (32 - 140)	6	R3/8
30.109	-0.95 - 15 (-13.8 - 217.6)	0 - 60 (32 - 140)	8	R1/8
30.110	-0.95 - 15 (-13.8 - 217.6)	0 - 60 (32 - 140)	8	R1/4
30.111	-0.95 - 15 (-13.8 - 217.6)	0 - 60 (32 - 140)	8	R3/8
30.102-G	-0.95 - 15 (-13.8 - 217.6)	-20 - 80 (-4 - 176)	4	G1/8
30.103-G	-0.95 - 15 (-13.8 - 217.6)	-20 - 80 (-4 - 176)	4	G1/4
30.106-G	-0.95 - 15 (-13.8 - 217.6)	-20 - 80 (-4 - 176)	6	G1/8
30.107-G	-0.95 - 15 (-13.8 - 217.6)	-20 - 80 (-4 - 176)	6	G1/4
30.108-G	-0.95 - 15 (-13.8 - 217.6)	-20 - 80 (-4 - 176)	6	G3/8
30.109-G	-0.95 - 15 (-13.8 - 217.6)	-20 - 80 (-4 - 176)	8	G1/8
30.110-G	-0.95 - 15 (-13.8 - 217.6)	-20 - 80 (-4 - 176)	8	G1/4
30.111-G	-0.95 - 15 (-13.8 - 217.6)	-20 - 80 (-4 - 176)	8	G3/8

FIPA challenge accepted

info@hidrafluid.es
976 24 32 10

90° elbow female connectors

Technical data			Dimensions	
Item no.	Pressure range [bar (psi)]	Operating temperature [°C (°F)]	Ø D [mm]	G
30.170	-0.95 - 15 (-13.8 - 217.6)	0 - 60 (32 - 140)	4	M5
30.171	-0.95 - 15 (-13.8 - 217.6)	0 - 60 (32 - 140)	4	M6
30.172	-0.95 - 15 (-13.8 - 217.6)	0 - 60 (32 - 140)	4	R1/8
30.173	-0.95 - 15 (-13.8 - 217.6)	0 - 60 (32 - 140)	4	R1/4
30.174	-0.95 - 15 (-13.8 - 217.6)	0 - 60 (32 - 140)	6	M5
30.175	-0.95 - 15 (-13.8 - 217.6)	0 - 60 (32 - 140)	6	M6
30.176	-0.95 - 15 (-13.8 - 217.6)	0 - 60 (32 - 140)	6	R1/8
30.177	-0.95 - 15 (-13.8 - 217.6)	0 - 60 (32 - 140)	6	R1/4
30.178	-0.95 - 15 (-13.8 - 217.6)	0 - 60 (32 - 140)	6	R3/8
30.179	-0.95 - 15 (-13.8 - 217.6)	0 - 60 (32 - 140)	8	R1/8
30.180	-0.95 - 15 (-13.8 - 217.6)	0 - 60 (32 - 140)	8	R1/4
30.181	-0.95 - 15 (-13.8 - 217.6)	0 - 60 (32 - 140)	8	R3/8
30.172-G	-0.95 - 15 (-13.8 - 217.6)	-20 - 80 (-4 - 176)	4	G1/8
30.173-G	-0.95 - 15 (-13.8 - 217.6)	-20 - 80 (-4 - 176)	4	G1/4
30.176-G	-0.95 - 15 (-13.8 - 217.6)	-20 - 80 (-4 - 176)	6	G1/8
30.177-G	-0.95 - 15 (-13.8 - 217.6)	-20 - 80 (-4 - 176)	6	G1/4
30.178-G	-0.95 - 15 (-13.8 - 217.6)	-20 - 80 (-4 - 176)	6	G3/8
30.179-G	-0.95 - 15 (-13.8 - 217.6)	-20 - 80 (-4 - 176)	8	G1/8
30.180-G	-0.95 - 15 (-13.8 - 217.6)	-20 - 80 (-4 - 176)	8	G1/4
30.181-G	-0.95 - 15 (-13.8 - 217.6)	-20 - 80 (-4 - 176)	8	G3/8

90° male elbows with cut-off valve

Locking of compressed air or vacuum during disassembly, release after reconnection

Technical data			Dimensions	
Item no.	Pressure range [bar (psi)]	Operating temperature [°C (°F)]	Ø D [mm]	G
30.774	-0.95 - 15 (-13.8 - 217.6)	0 - 60 (32 - 140)	4	M5
30.775	-0.95 - 15 (-13.8 - 217.6)	0 - 60 (32 - 140)	4	G1/8
30.776	-0.95 - 15 (-13.8 - 217.6)	0 - 60 (32 - 140)	6	M5
30.777	-0.95 - 15 (-13.8 - 217.6)	0 - 60 (32 - 140)	6	G1/8
30.778	-0.95 - 15 (-13.8 - 217.6)	0 - 60 (32 - 140)	6	G1/4

info@hidrafluid.es
976 24 32 10

90° elbow connectors – equal

Technical data			Dimensions
Item no.	Pressure range [bar (psi)]	Operating temperature [°C (°F)]	Ø D [mm]
30.270	-0.95 - 15 (-13.8 - 217.6)	0 - 60 (32 - 140)	4
30.271	-0.95 - 15 (-13.8 - 217.6)	0 - 60 (32 - 140)	6
30.272	-0.95 - 15 (-13.8 - 217.6)	0 - 60 (32 - 140)	8

Male banjo connectors

Technical data			Dimensions	
Item no.	Pressure range [bar (psi)]	Operating temperature [°C (°F)]	Ø D [mm]	G
30.300	-0.95 - 15 (-13.8 - 217.6)	0 - 60 (32 - 140)	4	M6
30.301	-0.95 - 15 (-13.8 - 217.6)	0 - 60 (32 - 140)	4	R1/8
30.302	-0.95 - 15 (-13.8 - 217.6)	0 - 60 (32 - 140)	6	M5
30.303	-0.95 - 15 (-13.8 - 217.6)	0 - 60 (32 - 140)	6	M6
30.304	-0.95 - 15 (-13.8 - 217.6)	0 - 60 (32 - 140)	6	R1/8
30.305	-0.95 - 15 (-13.8 - 217.6)	0 - 60 (32 - 140)	6	R1/4
30.306	-0.95 - 15 (-13.8 - 217.6)	0 - 60 (32 - 140)	8	R1/8
30.307	-0.95 - 15 (-13.8 - 217.6)	0 - 60 (32 - 140)	8	R1/4
30.308	-0.95 - 15 (-13.8 - 217.6)	0 - 60 (32 - 140)	8	R3/8

FIPA challenge accepted

info@hidrafluid.es
976 24 32 10

Male branch tee connectors

Technical data			Dimensions	
Item no.	Pressure range [bar (psi)]	Operating temperature [°C (°F)]	Ø D [mm]	G
30.332	-0.95 - 15 (-13.8 - 217.6)	0 - 60 (32 - 140)	4	M5
30.333	-0.95 - 15 (-13.8 - 217.6)	0 - 60 (32 - 140)	4	M6
30.334	-0.95 - 15 (-13.8 - 217.6)	0 - 60 (32 - 140)	4	R1/8
30.335	-0.95 - 15 (-13.8 - 217.6)	0 - 60 (32 - 140)	4	R1/4
30.336	-0.95 - 15 (-13.8 - 217.6)	0 - 60 (32 - 140)	6	M5
30.337	-0.95 - 15 (-13.8 - 217.6)	0 - 60 (32 - 140)	6	M6
30.338	-0.95 - 15 (-13.8 - 217.6)	0 - 60 (32 - 140)	6	R1/8
30.339	-0.95 - 15 (-13.8 - 217.6)	0 - 60 (32 - 140)	6	R1/4
30.340	-0.95 - 15 (-13.8 - 217.6)	0 - 60 (32 - 140)	6	R3/8
30.341	-0.95 - 15 (-13.8 - 217.6)	0 - 60 (32 - 140)	8	R1/8
30.342	-0.95 - 15 (-13.8 - 217.6)	0 - 60 (32 - 140)	8	R1/4
30.343	-0.95 - 15 (-13.8 - 217.6)	0 - 60 (32 - 140)	8	R3/8

Equal tube tee connectors

Technical data			Dimensions
Item no.	Pressure range [bar (psi)]	Operating temperature [°C (°F)]	Ø D [mm]
30.390	-0.95 - 15 (-13.8 - 217.6)	0 - 60 (32 - 140)	4
30.391	-0.95 - 15 (-13.8 - 217.6)	0 - 60 (32 - 140)	6
30.392	-0.95 - 15 (-13.8 - 217.6)	0 - 60 (32 - 140)	8

info@hidrafluid.es
976 24 32 10

Unequal tube tee connectors

Technical data			Dimensions	
Item no.	Pressure range [bar (psi)]	Operating temperature [°C (°F)]	Ø D1 [mm]	Ø D2 [mm]
30.399	-0.95 - 15 (-13.8 - 217.6)	0 - 60 (32 - 140)	6	4
30.400	-0.95 - 15 (-13.8 - 217.6)	0 - 60 (32 - 140)	8	6

Equal Y-connectors

Technical data			Dimensions
Item no.	Pressure range [bar (psi)]	Operating temperature [°C (°F)]	Ø D [mm]
30.431	-0.95 - 15 (-13.8 - 217.6)	0 - 60 (32 - 140)	4
30.432	-0.95 - 15 (-13.8 - 217.6)	0 - 60 (32 - 140)	6
30.433	-0.95 - 15 (-13.8 - 217.6)	0 - 60 (32 - 140)	8

Unequal Y-connectors

Technical data			Dimensions	
Item no.	Pressure range [bar (psi)]	Operating temperature [°C (°F)]	Ø D1 [mm]	Ø D2 [mm]
30.440	-0.95 - 15 (-13.8 - 217.6)	0 - 60 (32 - 140)	6	4
30.441	-0.95 - 15 (-13.8 - 217.6)	0 - 60 (32 - 140)	8	6

FIPA challenge accepted

info@hidrafluid.es
976 24 32 10

Male Y-connectors

Technical data			Dimensions	
Item no.	Pressure range [bar (psi)]	Operating temperature [°C (°F)]	Ø D [mm]	G
30.403	-0.95 - 15 (-13.8 - 217.6)	0 - 60 (32 - 140)	4	M5
30.404	-0.95 - 15 (-13.8 - 217.6)	0 - 60 (32 - 140)	4	R1/8
30.405	-0.95 - 15 (-13.8 - 217.6)	0 - 60 (32 - 140)	4	R1/4
30.406	-0.95 - 15 (-13.8 - 217.6)	0 - 60 (32 - 140)	6	M5
30.407	-0.95 - 15 (-13.8 - 217.6)	0 - 60 (32 - 140)	6	M6
30.408	-0.95 - 15 (-13.8 - 217.6)	0 - 60 (32 - 140)	6	R1/8
30.409	-0.95 - 15 (-13.8 - 217.6)	0 - 60 (32 - 140)	6	R1/4
30.410	-0.95 - 15 (-13.8 - 217.6)	0 - 60 (32 - 140)	6	R3/8
30.411	-0.95 - 15 (-13.8 - 217.6)	0 - 60 (32 - 140)	8	R1/8
30.412	-0.95 - 15 (-13.8 - 217.6)	0 - 60 (32 - 140)	8	R1/4
30.413	-0.95 - 15 (-13.8 - 217.6)	0 - 60 (32 - 140)	8	R3/8

Elbow Y male connectors

Technical data			Dimensions	
Item no.	Pressure range [bar (psi)]	Operating temperature [°C (°F)]	Ø D [mm]	G
30.518	-0.95 - 15 (-13.8 - 217.6)	0 - 60 (32 - 140)	4	M5
30.519	-0.95 - 15 (-13.8 - 217.6)	0 - 60 (32 - 140)	4	M6
30.520	-0.95 - 15 (-13.8 - 217.6)	0 - 60 (32 - 140)	4	R1/8
30.521	-0.95 - 15 (-13.8 - 217.6)	0 - 60 (32 - 140)	4	R1/4
30.522	-0.95 - 15 (-13.8 - 217.6)	0 - 60 (32 - 140)	6	M5
30.523	-0.95 - 15 (-13.8 - 217.6)	0 - 60 (32 - 140)	6	M6
30.524	-0.95 - 15 (-13.8 - 217.6)	0 - 60 (32 - 140)	6	R1/8
30.525	-0.95 - 15 (-13.8 - 217.6)	0 - 60 (32 - 140)	6	R1/4
30.527	-0.95 - 15 (-13.8 - 217.6)	0 - 60 (32 - 140)	8	R1/8
30.528	-0.95 - 15 (-13.8 - 217.6)	0 - 60 (32 - 140)	8	R1/4
30.529	-0.95 - 15 (-13.8 - 217.6)	0 - 60 (32 - 140)	8	R3/8

info@hidrafluid.es
976 24 32 10

Push-in connectors QC

Available as an option: connecting strap for parallel circuit = QB-H, for series circuit = QB-T

Technical data			Dimensions	
Item no.	Pressure range [bar (psi)]	Operating temperature [°C (°F)]	Ø D1 [mm]	Ø D2 [mm]
QC3-3M	-0.95 - 15 (-13.8 - 217.6)	0 - 60 (32 - 140)	3	3
QC3-4M	-0.95 - 15 (-13.8 - 217.6)	0 - 60 (32 - 140)	3	4
QC3-6M	-0.95 - 15 (-13.8 - 217.6)	0 - 60 (32 - 140)	3	6
QC4-3M	-0.95 - 15 (-13.8 - 217.6)	0 - 60 (32 - 140)	4	3
QC4-4M	-0.95 - 15 (-13.8 - 217.6)	0 - 60 (32 - 140)	4	4
QC4-6M	-0.95 - 15 (-13.8 - 217.6)	0 - 60 (32 - 140)	4	6
QC6-3M	-0.95 - 15 (-13.8 - 217.6)	0 - 60 (32 - 140)	6	3
QC6-4M	-0.95 - 15 (-13.8 - 217.6)	0 - 60 (32 - 140)	6	4
QC6-6M	-0.95 - 15 (-13.8 - 217.6)	0 - 60 (32 - 140)	6	6
QC6-6	-0.95 - 15 (-13.8 - 217.6)	0 - 60 (32 - 140)	6	6
QC6-8	-0.95 - 15 (-13.8 - 217.6)	0 - 60 (32 - 140)	6	8
QC8-6	-0.95 - 15 (-13.8 - 217.6)	0 - 60 (32 - 140)	8	6
QC8-8	-0.95 - 15 (-13.8 - 217.6)	0 - 60 (32 - 140)	8	8

Two stack banjos

Technical data			Dimensions	
Item no.	Pressure range [bar (psi)]	Operating temperature [°C (°F)]	Ø D [mm]	G
30.599	-0.95 - 15 (-13.8 - 217.6)	0 - 60 (32 - 140)	4	R1/8
30.600	-0.95 - 15 (-13.8 - 217.6)	0 - 60 (32 - 140)	4	R1/4
30.601	-0.95 - 15 (-13.8 - 217.6)	0 - 60 (32 - 140)	4	R3/8
30.602	-0.95 - 15 (-13.8 - 217.6)	0 - 60 (32 - 140)	6	R1/8
30.603	-0.95 - 15 (-13.8 - 217.6)	0 - 60 (32 - 140)	6	R1/4
30.604	-0.95 - 15 (-13.8 - 217.6)	0 - 60 (32 - 140)	6	R3/8
30.605	-0.95 - 15 (-13.8 - 217.6)	0 - 60 (32 - 140)	8	R1/8
30.606	-0.95 - 15 (-13.8 - 217.6)	0 - 60 (32 - 140)	8	R1/4
30.607	-0.95 - 15 (-13.8 - 217.6)	0 - 60 (32 - 140)	8	R3/8
30.608	-0.95 - 15 (-13.8 - 217.6)	0 - 60 (32 - 140)	8	R1/2

FIPA challenge accepted

info@hidrafluid.es
976 24 32 10

Two stack, twin banjos

Technical data			Dimensions	
Item no.	Pressure range [bar (psi)]	Operating temperature [°C (°F)]	Ø D [mm]	G
30.649	-0.95 - 15 (-13.8 - 217.6)	0 - 60 (32 - 140)	4	R1/8
30.650	-0.95 - 15 (-13.8 - 217.6)	0 - 60 (32 - 140)	4	R1/4
30.651	-0.95 - 15 (-13.8 - 217.6)	0 - 60 (32 - 140)	4	R3/8
30.652	-0.95 - 15 (-13.8 - 217.6)	0 - 60 (32 - 140)	6	R1/8
30.653	-0.95 - 15 (-13.8 - 217.6)	0 - 60 (32 - 140)	6	R1/4
30.654	-0.95 - 15 (-13.8 - 217.6)	0 - 60 (32 - 140)	6	R3/8
30.655	-0.95 - 15 (-13.8 - 217.6)	0 - 60 (32 - 140)	8	R1/8
30.656	-0.95 - 15 (-13.8 - 217.6)	0 - 60 (32 - 140)	8	R1/4
30.657	-0.95 - 15 (-13.8 - 217.6)	0 - 60 (32 - 140)	8	R3/8
30.658	-0.95 - 15 (-13.8 - 217.6)	0 - 60 (32 - 140)	8	R1/2

3-way male elbow connectors

Technical data			Dimensions	
Item no.	Pressure range [bar (psi)]	Operating temperature [°C (°F)]	Ø D [mm]	G
30.490	-0.95 - 15 (-13.8 - 217.6)	0 - 60 (32 - 140)	4	M5
30.491	-0.95 - 15 (-13.8 - 217.6)	0 - 60 (32 - 140)	4	M6
30.492	-0.95 - 15 (-13.8 - 217.6)	0 - 60 (32 - 140)	4	R1/8
30.493	-0.95 - 15 (-13.8 - 217.6)	0 - 60 (32 - 140)	4	R1/4
30.494	-0.95 - 15 (-13.8 - 217.6)	0 - 60 (32 - 140)	6	M5
30.495	-0.95 - 15 (-13.8 - 217.6)	0 - 60 (32 - 140)	6	M6
30.496	-0.95 - 15 (-13.8 - 217.6)	0 - 60 (32 - 140)	6	R1/8
30.497	-0.95 - 15 (-13.8 - 217.6)	0 - 60 (32 - 140)	6	R1/4
30.498	-0.95 - 15 (-13.8 - 217.6)	0 - 60 (32 - 140)	6	R3/8
30.499	-0.95 - 15 (-13.8 - 217.6)	0 - 60 (32 - 140)	8	R1/8
30.500	-0.95 - 15 (-13.8 - 217.6)	0 - 60 (32 - 140)	8	R1/4
30.501	-0.95 - 15 (-13.8 - 217.6)	0 - 60 (32 - 140)	8	R3/8

info@hidrafluid.es
976 24 32 10

Three stack, twin banjos

Technical data			Dimensions	
Item no.	Pressure range [bar (psi)]	Operating temperature [°C (°F)]	Ø D [mm]	G
30.674	-0.95 - 15 (-13.8 - 217.6)	0 - 60 (32 - 140)	4	R1/8
30.675	-0.95 - 15 (-13.8 - 217.6)	0 - 60 (32 - 140)	4	R1/4
30.676	-0.95 - 15 (-13.8 - 217.6)	0 - 60 (32 - 140)	4	R3/8
30.677	-0.95 - 15 (-13.8 - 217.6)	0 - 60 (32 - 140)	6	R1/8
30.678	-0.95 - 15 (-13.8 - 217.6)	0 - 60 (32 - 140)	6	R1/4
30.679	-0.95 - 15 (-13.8 - 217.6)	0 - 60 (32 - 140)	6	R3/8
30.680	-0.95 - 15 (-13.8 - 217.6)	0 - 60 (32 - 140)	8	R1/8
30.681	-0.95 - 15 (-13.8 - 217.6)	0 - 60 (32 - 140)	8	R1/4
30.682	-0.95 - 15 (-13.8 - 217.6)	0 - 60 (32 - 140)	8	R3/8
30.683	-0.95 - 15 (-13.8 - 217.6)	0 - 60 (32 - 140)	8	R1/2

FIPA challenge accepted

info@hidrafluid.es
976 24 32 10

Mini male stud connectors

Technical data			Dimensions	
Item no.	Pressure range [bar (psi)]	Operating temperature [°C (°F)]	Ø D [mm]	G
30.900	-0.95 - 15 (-13.8 - 217.6)	0 - 60 (32 - 140)	3	M3
30.901	-0.95 - 15 (-13.8 - 217.6)	0 - 60 (32 - 140)	3	M5
30.902	-0.95 - 15 (-13.8 - 217.6)	0 - 60 (32 - 140)	3	M6
30.903	-0.95 - 15 (-13.8 - 217.6)	0 - 60 (32 - 140)	4	M3
30.904	-0.95 - 15 (-13.8 - 217.6)	0 - 60 (32 - 140)	4	M5
30.905	-0.95 - 15 (-13.8 - 217.6)	0 - 60 (32 - 140)	4	M6
30.906	-0.95 - 15 (-13.8 - 217.6)	0 - 60 (32 - 140)	4	R1/8
30.907	-0.95 - 15 (-13.8 - 217.6)	0 - 60 (32 - 140)	6	M5
30.908	-0.95 - 15 (-13.8 - 217.6)	0 - 60 (32 - 140)	6	M6
30.906-G	-0.95 - 15 (-13.8 - 217.6)	-20 - 80 (-4 - 176)	4	G1/8
30.910-G	-0.95 - 15 (-13.8 - 217.6)	-20 - 80 (-4 - 176)	6	G1/8

Mini male stud connectors, round, hex key

Technical data			Dimensions	
Item no.	Pressure range [bar (psi)]	Operating temperature [°C (°F)]	Ø D [mm]	G
30.921	-0.95 - 15 (-13.8 - 217.6)	0 - 60 (32 - 140)	3	M5
30.922	-0.95 - 15 (-13.8 - 217.6)	0 - 60 (32 - 140)	4	M3
30.923	-0.95 - 15 (-13.8 - 217.6)	0 - 60 (32 - 140)	4	M5
30.924	-0.95 - 15 (-13.8 - 217.6)	0 - 60 (32 - 140)	4	M6
30.925	-0.95 - 15 (-13.8 - 217.6)	0 - 60 (32 - 140)	4	R1/8
30.926	-0.95 - 15 (-13.8 - 217.6)	0 - 60 (32 - 140)	6	M5
30.927	-0.95 - 15 (-13.8 - 217.6)	0 - 60 (32 - 140)	6	M6
30.928	-0.95 - 15 (-13.8 - 217.6)	0 - 60 (32 - 140)	6	R1/8

info@hidrafluid.es
976 24 32 10

Mini tube fittings, cartridge

Technical data			Dimensions	
Item no.	Pressure range [bar (psi)]	Operating temperature [°C (°F)]	Ø D [mm]	G
30.932	-0.95 - 15 (-13.8 - 217.6)	0 - 60 (32 - 140)	3	M6
30.933	-0.95 - 15 (-13.8 - 217.6)	0 - 60 (32 - 140)	4	M6
30.934	-0.95 - 15 (-13.8 - 217.6)	0 - 60 (32 - 140)	4	M8
30.935	-0.95 - 15 (-13.8 - 217.6)	0 - 60 (32 - 140)	6	M8

Mini female stud connectors

Technical data			Dimensions	
Item no.	Pressure range [bar (psi)]	Operating temperature [°C (°F)]	Ø D [mm]	G
30.914	-0.95 - 15 (-13.8 - 217.6)	0 - 60 (32 - 140)	3	M3
30.915	-0.95 - 15 (-13.8 - 217.6)	0 - 60 (32 - 140)	3	M5
30.916	-0.95 - 15 (-13.8 - 217.6)	0 - 60 (32 - 140)	4	M3
30.917	-0.95 - 15 (-13.8 - 217.6)	0 - 60 (32 - 140)	4	M5

Mini 45° male elbow connectors

Technical data			Dimensions	
Item no.	Pressure range [bar (psi)]	Operating temperature [°C (°F)]	Ø D [mm]	G
30.976	-0.95 - 15 (-13.8 - 217.6)	0 - 60 (32 - 140)	4	M3
30.977	-0.95 - 15 (-13.8 - 217.6)	0 - 60 (32 - 140)	4	M5
30.978	-0.95 - 15 (-13.8 - 217.6)	0 - 60 (32 - 140)	4	M6
30.979	-0.95 - 15 (-13.8 - 217.6)	0 - 60 (32 - 140)	4	R1/8
30.980	-0.95 - 15 (-13.8 - 217.6)	0 - 60 (32 - 140)	6	M5
30.981	-0.95 - 15 (-13.8 - 217.6)	0 - 60 (32 - 140)	6	M6
30.982	-0.95 - 15 (-13.8 - 217.6)	0 - 60 (32 - 140)	6	R1/8

FIPA challenge accepted

info@hidrafluid.es
976 24 32 10

Mini unequal tube tee connectors

Technical data			Dimensions	
Item no.	Pressure range [bar (psi)]	Operating temperature [°C (°F)]	Ø D1 [mm]	Ø D2 [mm]
31.025	-0.95 - 15 (-13.8 - 217.6)	0 - 60 (32 - 140)	4	3
31.026	-0.95 - 15 (-13.8 - 217.6)	0 - 60 (32 - 140)	6	4

Mini extended male elbow connectors

Technical data			Dimensions	
Item no.	Pressure range [bar (psi)]	Operating temperature [°C (°F)]	Ø D [mm]	G
30.963	-0.95 - 15 (-13.8 - 217.6)	0 - 60 (32 - 140)	3	M3
30.964	-0.95 - 15 (-13.8 - 217.6)	0 - 60 (32 - 140)	4	M3
30.965	-0.95 - 15 (-13.8 - 217.6)	0 - 60 (32 - 140)	4	M5
30.966	-0.95 - 15 (-13.8 - 217.6)	0 - 60 (32 - 140)	4	M6
30.967	-0.95 - 15 (-13.8 - 217.6)	0 - 60 (32 - 140)	4	R1/8
30.968	-0.95 - 15 (-13.8 - 217.6)	0 - 60 (32 - 140)	6	M5
30.969	-0.95 - 15 (-13.8 - 217.6)	0 - 60 (32 - 140)	6	M6
30.970	-0.95 - 15 (-13.8 - 217.6)	0 - 60 (32 - 140)	6	R1/8

info@hidrafluid.es
976 24 32 10

Mini male elbow connectors

Technical data			Dimensions	
Item no.	Pressure range [bar (psi)]	Operating temperature [°C (°F)]	Ø D [mm]	G
30.949	-0.95 - 15 (-13.8 - 217.6)	0 - 60 (32 - 140)	3	M3
30.950	-0.95 - 15 (-13.8 - 217.6)	0 - 60 (32 - 140)	3	M5
30.951	-0.95 - 15 (-13.8 - 217.6)	0 - 60 (32 - 140)	3	M6
30.952	-0.95 - 15 (-13.8 - 217.6)	0 - 60 (32 - 140)	4	M3
30.953	-0.95 - 15 (-13.8 - 217.6)	0 - 60 (32 - 140)	4	M5
30.954	-0.95 - 15 (-13.8 - 217.6)	0 - 60 (32 - 140)	4	M6
30.955	-0.95 - 15 (-13.8 - 217.6)	0 - 60 (32 - 140)	4	R1/8
30.956	-0.95 - 15 (-13.8 - 217.6)	0 - 60 (32 - 140)	6	M5
30.957	-0.95 - 15 (-13.8 - 217.6)	0 - 60 (32 - 140)	6	M6
30.958	-0.95 - 15 (-13.8 - 217.6)	0 - 60 (32 - 140)	6	R1/8

Mini male branch equal tee connectors

Technical data			Dimensions	
Item no.	Pressure range [bar (psi)]	Operating temperature [°C (°F)]	Ø D [mm]	G
30.993	-0.95 - 15 (-13.8 - 217.6)	0 - 60 (32 - 140)	3	M3
30.994	-0.95 - 15 (-13.8 - 217.6)	0 - 60 (32 - 140)	3	M5
30.995	-0.95 - 15 (-13.8 - 217.6)	0 - 60 (32 - 140)	3	M6
30.996	-0.95 - 15 (-13.8 - 217.6)	0 - 60 (32 - 140)	4	M3
30.997	-0.95 - 15 (-13.8 - 217.6)	0 - 60 (32 - 140)	4	M5
30.998	-0.95 - 15 (-13.8 - 217.6)	0 - 60 (32 - 140)	4	M6
30.999	-0.95 - 15 (-13.8 - 217.6)	0 - 60 (32 - 140)	4	R1/8
31.000	-0.95 - 15 (-13.8 - 217.6)	0 - 60 (32 - 140)	6	M5
31.001	-0.95 - 15 (-13.8 - 217.6)	0 - 60 (32 - 140)	6	M6
31.002	-0.95 - 15 (-13.8 - 217.6)	0 - 60 (32 - 140)	6	R1/8

FIPA challenge accepted

info@hidrafluid.es
976 24 32 10

Double nipples, equal thread – SZ-GA-MM

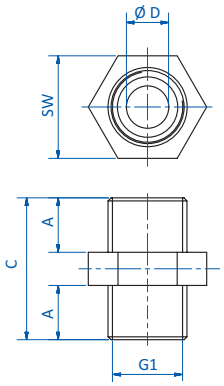

Technical data		Dimensions				
Item no.	Material	G1 (male)	A [mm]	C [mm]	Ø D [mm]	SW
270.420	Brass	M5	5	13	2.5	7
270.059	Brass	G1/8	7	18	5	14
270.120	Brass	G1/4	9	23.5	7	17
270.121	Nickel-plated brass	G3/8	9	23	11	19

Reducing bushes with hex socket – SZ GA- MMI

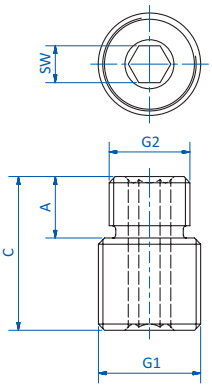

Technical data		Dimensions				
Item no.	Material	G1 (male)	G2 (male)	A [mm]	C [mm]	SW
270.561	Aluminum	G3/8	G1/4	10	25	6
270.562	Aluminum	G3/8	M10	12	27	5
270.563	Aluminum	G3/8	M14	12	27	6
270.564	Aluminum	G1/4	G1/4	--	22	5
270.565	Aluminum	G1/4	M10	12	24	5
270.566	Aluminum	G1/4	M14	11	24	5

info@hidrafluid.es
976 24 32 10

Reducing nipples – SZ-GA-RMM

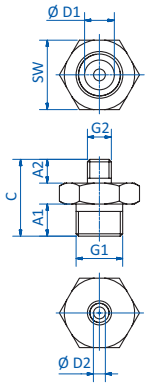

Technical data

Item no.	Material
270.280	Nickel-plated brass
270.279	Aluminum
270.131	Brass
270.107	Aluminum
270.227	Brass
270.320	Aluminum
270.108	Aluminum
270.181	Nickel-plated brass

Dimensions

G1 (male)	G2 (male)	A1 [mm]	A2 [mm]	C [mm]	D1 [mm]	D2 [mm]	SW
G1/8	M5	6.5	4.8	15.5	6	2.4	14
G1/8	M6	9	7	21	3	3	14
G1/8	M8	7	6	18	4	4	14
G1/8	M12	7.5	8.5	21	5.6	5.6	17
G1/4	M5	9	5	19	7.5	2.5	17
G1/4	M10	10	10	25	5.5	5.5	17
G1/4	M12	8	8	21	5.5	5.5	17
G1/4	G1/8	9	8	22	4	4	17

FIPA challenge accepted

info@hidrafluid.es
976 24 32 10

Reducing bushings male/female – SZ-GA-MF

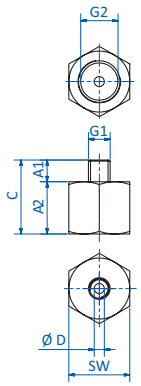

Technical data

Dimensions

Item no.	Material	G1 (male)	G2 (female)	A1 [mm]	A2 [mm]	C [mm]	Ø D [mm]	SW
270.423	Nickel-plated brass	M5	M5	4	7	11	2	8
270.079	Brass	M5	G1/8	5	12	17	2.3	14
270.576	Steel galvanized	M12	G1/4	10	12	22	6.5	17
270.577	Steel galvanized	M16	G3/8	10	15	25	10	24
270.302	Nickel-plated brass	G1/8	M5	6	4	10	--	14
270.303	Nickel-plated brass	G1/8	M6	8	5	13	--	13
270.334	Nickel-plated brass	G1/8	G1/4	6	10	20	5.3	17
270.304	Aluminum	G1/4	M6	10	5	15	--	17
270.090	Brass	G1/4	M10	5.7	4	11.5	--	19
270.088	Aluminum	G1/4	M10	12	16	28	4	17
270.245	Brass	G1/4	G1/8	9	4	13	--	17
270.078	Brass	G1/4	G1/4	10	18	28	7.5	17
270.567	Aluminum	G1/4	G3/8	11	16	27	4	20
270.560	Aluminum	G3/8	G1/4	11	5	16	--	22

Blanking plugs with O-ring seal – SZ-SCV

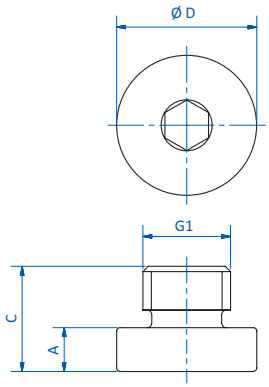

Technical data

Dimensions

Item no.	Material	G1 (male)	A [mm]	C [mm]	Ø D [mm]
77.000	Nickel-plated brass	M5	2	6	8
77.009	Nickel-plated brass	G1/8	3	11	17
77.008	Nickel-plated brass	G1/4	3	9.5	14
77.007	Nickel-plated brass	G1/2	3.5	13.5	25
77.010	Nickel-plated brass	G3/8	3.5	12.5	20

info@hidrafluid.es
976 24 32 10

Threaded bushes – SZ-GA-FF

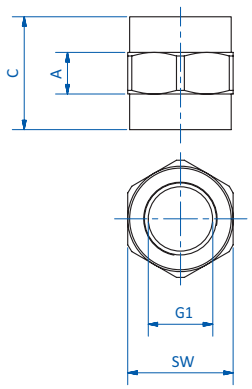

Technical data		Dimensions			
Item no.	Material	G1 (female)	A [mm]	C [mm]	SW
270.343	Nickel-plated brass	G1/8	5.5	15	14
270.182.O	Aluminum	G1/4	20	20	19
270.579	Aluminum	G3/8	23	23	22

Reducing bushes – SZ-GA-RFF

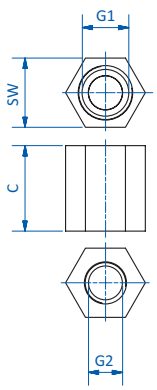

Technical data		Dimensions			
Item no.	Material	G1 (female)	G2 (female)	C [mm]	SW
270.306	Aluminum	G1/8	M5	14	13
270.307	Aluminum	G1/8	M6	14	13
270.308	Aluminum	G1/4	M6	17.5	17
270.089	Aluminum	G1/4	M10	21	17
270.228	Nickel-plated brass	G3/8	G1/4	21.5	22

Elbow connectors AG – SZ-WAA

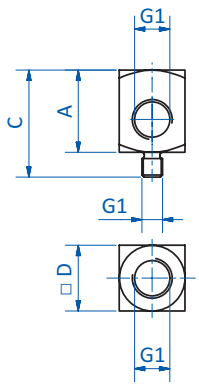

Technical data		Dimensions				
Item no.	Material	G1 (female)	G2 (male)	A [mm]	C [mm]	□ D [mm]
GR07.010	Steel nickel-plated	G1/8	M5	20	26	16
GR07.011	Steel nickel-plated	G1/4	M6	33	43	25
GR07.012	Steel nickel-plated	G1/4	M8	33	43	25
GR07.013	Steel nickel-plated	G1/4	G1/8	25	35	20

FIPA challenge accepted
info@hidrafluid.es
976 24 32 10

Elbow connectors IG – SZ-WAI

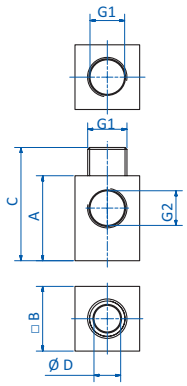

Technical data

Item no.	Material
270.395	Aluminum
270.396	Aluminum

Dimensions

Item no.	G1 (female+male)	G2 (female)	A [mm]	□ B [mm]	C [mm]	Ø D [mm]
270.395	G1/8	G1/8	21	16	28	6.6
270.396	G1/4	G1/8	26	18	36	8

Bulkhead connectors – SZ-SVS

Allow for height adjustment during vacuum cup installation

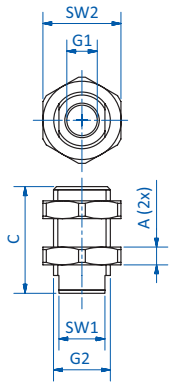

Technical data

Item no.	Material bushing	Material screw nut
270.518	Stainless steel	Steel galvanized
270.519	Stainless steel	Steel galvanized

Dimensions

Item no.	G1 (female)	G2 (male)	A [mm]	C [mm]	SW1	SW2
270.518	G1/8	M16	5	30	13	22
270.519	G1/4	M20	5	30	--	24

Sealing rings – SZ-DR

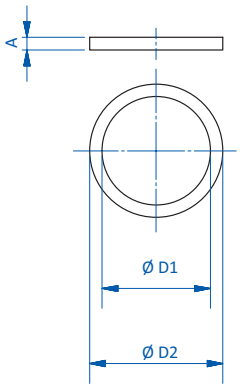

Technical data

Item no.	For outside thread	Material
78.052	M5	Rigid PVC white
78.053	G1/8	Rigid PVC white
78.054	G1/4	Rigid PVC white
78.051	G3/8	Rigid PVC white
78.055	G1/2	Rigid PVC white
78.056	G3/4	Rigid PVC white

Dimensions

Item no.	A [mm]	Ø D1 [mm]	Ø D2 [mm]
78.052	1	5.4	7.9
78.053	2	10.3	13.5
78.054	2	13.3	18
78.051	2	17.5	21.3
78.055	2	21.2	27.9
78.056	2	26.8	33

Ordering notes

1 packing unit = 100 pieces

info@hidrafluid.es
976 24 32 10

Item no.	Page
20.007	376
20.016.145._*	141
20.016.146._*	141
20.021.147._*	141
20.022	378
20.023	379
20.026.148._*	141
20.037.149._*	141
20.037.150._*	141
20.040	377
20.041	377
20.053.151._*	141
20.053.152._*	141
20.053.153._*	141
20.077.154._*	141
20.077.155._*	141
20.088.123._*	150
20.088.124._*	150
20.501	410
20.502	410
20.503	410
20.504	410
20.507	410
20.508	410
20.509	410
20.511	380
20.514	382
20.515	382
20.518	410
20.519	410
20.520	383
20.522	380
20.523	380
20.524	420
20.525	420
20.525/NPN	420
20.526	420
20.527	411
20.528	411
20.530	422
20.531	422
20.535	38
20.536	38
20.537	38
20.538	38
20.540	418
20.541	418
20.542	418
20.550	410
20.570	410
21.004.083._*	150
21.005.057._*	134, 150
21.005.146._*	128
21.006.087._*	150
21.006.093._*	150
21.007.089._*	134
21.007.147._*	128

Item no.	Page
21.008.094._*	150
21.009.002._*	134, 150
21.009.148._*	128
21.010.119._*	150
21.012.135._*	134, 150
21.012.149._*	128
21.014.007._*	150
21.014.053._*	134
21.014.133._*	150
21.014.150._*	128
21.016.175._*	141
21.018.010._*	134, 150
21.018.151._*	128
21.020.016._*	134, 150
21.020.152._*	128
21.021.176._*	141
21.025.060._*	150
21.025.153._*	128
21.026.177._*	141
21.032.075._*	134, 150
21.032.154._*	128
21.037.177._*	141
21.042.155._*	128
21.043.049._*	134, 150
21.052.156._*	128
21.053.178._*	141
21.060.051._*	134
21.062.055._*	150
21.062.157._*	128
22.016.253._*	138
22.016.254._*	138
22.021.255._*	138
22.026.256._*	138
22.037.257._*	138
22.037.258._*	138
22.053.259._*	138
22.053.260._*	138
22.053.261._*	138
22.075.262._*	138
22.075.263._*	138
22.088.158._*	147
22.088.159._*	147
22.115.266._*	138
22.115.267._*	138
22.160.264._*	138
22.160.265._*	138
23.005.178._*	132
23.005.181._*	147
23.008.166._*	132
23.011.008._*	132, 147
23.011.234._*	126
23.013.120._*	147
23.014.235._*	126
23.015.122._*	132
23.016.016._*	132, 147
23.016.236._*	126
23.016.263._*	138

Item no.	Page
23.018.237._*	126
23.019.119._*	147
23.020.124._*	132
23.020.238._*	126
23.021.264._*	138
23.022.028._*	147
23.022.239._*	126
23.025.137._*	147
23.025.240._*	126
23.026.265._*	138
23.030.125._*	132
23.033.039._*	147
23.033.241._*	126
23.037.266._*	138
23.043.096._*	132, 147
23.043.242._*	126
23.053.033._*	147
23.053.243._*	126
23.053.267._*	138
23.063.244._*	126
23.075.151._*	147
23.115.274._*	138
23.160.273._*	138
30.000	437
30.001	437
30.002	437
30.002-G	437
30.003	437
30.003-G	437
30.004	437
30.005	437
30.006	437
30.006-G	437
30.007	437
30.007-G	437
30.008	437
30.008-G	437
30.009	437
30.010	437
30.011	437
30.011-G	437
30.050	439
30.051	439
30.052	439
30.053	439
30.054	439
30.055	439
30.056	439
30.075	439
30.076	439
30.100	440
30.101	440
30.102	440
30.102-G	440
30.103	440
30.103-G	440
30.104	440

info@hidrafluid.es
976 24 32 10

Item numbers index

Item no.	Page
30.105	440
30.106	440
30.106-G	440
30.107	440
30.107-G	440
30.108	440
30.108-G	440
30.109	440
30.109-G	440
30.110	440
30.110-G	440
30.111	440
30.111-G	440
30.170	441
30.171	441
30.172	441
30.172-G	441
30.173	441
30.173-G	441
30.174	441
30.175	441
30.176	441
30.176-G	441
30.177	441
30.177-G	441
30.178	441
30.178-G	441
30.179	441
30.179-G	441
30.180	441
30.180-G	441
30.181	441
30.181-G	441
30.200	438
30.201	438
30.202	438
30.203	438
30.204	438
30.205	438
30.206	438
30.207	438
30.208	438
30.209	438
30.223	439
30.224	439
30.225	439
30.270	442
30.271	442
30.272	442
30.300	442
30.301	442
30.302	442
30.303	442
30.304	442
30.305	442
30.306	442
30.307	442
30.308	442
30.332	443
30.333	443
30.334	443
30.335	443
30.336	443
30.337	443
30.338	443
30.339	443
30.340	443
30.341	443
30.342	443
30.343	443
30.390	443
30.391	443
30.392	443
30.399	444
30.400	444
30.403	445
30.404	445
30.405	445
30.406	445
30.407	445
30.408	445
30.409	445
30.410	445
30.411	445
30.412	445
30.413	445
30.431	444
30.432	444
30.433	444
30.440	444
30.441	444
30.490	447
30.491	447
30.492	447
30.493	447
30.494	447
30.495	447
30.496	447
30.497	447
30.498	447
30.499	447
30.500	447
30.501	447
30.518	445
30.519	445
30.520	445
30.521	445
30.522	445
30.523	445
30.524	445
30.525	445
30.527	445
30.528	445
30.529	445
30.599	446
30.600	446
30.601	446
30.602	446
30.603	446
30.604	446
30.605	446
30.606	446
30.607	446
30.608	446
30.649	447
30.650	447
30.651	447
30.652	447
30.653	447
30.654	447
30.655	447
30.656	447
30.657	447
30.658	447
30.674	448
30.675	448
30.676	448
30.677	448
30.678	448
30.679	448
30.680	448
30.681	448
30.682	448
30.683	448
30.761	438
30.762	438
30.763	438
30.764	438
30.765	438
30.774	441
30.775	441
30.776	441
30.777	441
30.778	441
30.900	449
30.901	449
30.902	449
30.903	449
30.904	449
30.905	449
30.906	449
30.906-G	449
30.907	449
30.908	449
30.910-G	449
30.914	450
30.915	450
30.916	450
30.917	450
30.921	449
30.922	449

FIPA challenge accepted

info@hidrafluid.es
976 24 32 10

Item numbers index

Item no.	Page
30.923	449
30.924	449
30.925	449
30.926	449
30.927	449
30.928	449
30.932	450
30.933	450
30.934	450
30.935	450
30.949	452
30.950	452
30.951	452
30.952	452
30.953	452
30.954	452
30.955	452
30.956	452
30.957	452
30.958	452
30.963	451
30.964	451
30.965	451
30.966	451
30.967	451
30.968	451
30.969	451
30.970	451
30.976	450
30.977	450
30.978	450
30.979	450
30.980	450
30.981	450
30.982	450
30.993	452
30.994	452
30.995	452
30.996	452
30.997	452
30.998	452
30.999	452
31.000	452
31.001	452
31.002	452
31.025	451
31.026	451
32.577	361
32.578	361
32.579	361
32.580	361
32.581	361
32.582	360
32.583	360
32.584	360
32.585	360
32.586	360

Item no.	Page
33.105	362
33.120	362
36.003	371
36.004-24VDC	369
36.004-230VAC	369
36.060	367
36.061	367
36.210	373
36.211	373
36.515	373
36.520	373
36.525	373
50.120	157
50.123	157
50.124	157
50.149	159
50.150	159
50.152	159
50.153	159
50.158	159
50.160	159
50.162	159
50.164	159
50.166	159
50.230	159
55.000	334
55.001	334
55.002	334
55.004	334
55.005	332
61.056	429
61.057	429
61.058	429
61.059	429
61.060	429
61.061	429
61.062	429
61.063	430
61.064	430
61.065	430
61.066	430
61.067	430
61.068	430
61.069	430
61.070	430
61.071	430
61.072	430
61.073	430
61.083	433
61.090	428
61.091	428
61.092	428
61.093	428
61.094	428
61.096	428
61.211	431
61.212	431

Item no.	Page
61.213	431
61.214	431
62.062	432
62.063	432
63.036	366
63.037	366
63.038	366
63.055	366
65.102A	392
65.111	392
65.120	392
65.130	392
65.510	270
65.510-PK	276
65.520	270
65.520-PK	276
65.530	270
65.530-PK	276
65.540	270
65.540-PK	276
71.000	364
71.001	364
71.002	364
71.003	364
71.004	364
71.035	365
71.036	365
71.037	365
71.038	365
71.039	365
71.070	364
71.071	364
72.000	399
72.001	399
72.002	399
72.003	399
72.007	399
72.008	399
72.009	399
72.015	400
72.016	400
72.017	400
72.018	400
72.019	400
72.020	400
72.021	400
72.022	400
72.023	400
72.024	400
72.025	400
72.028	398
72.029	398
72.030	398
72.031	398
72.032	398
72.033	398
72.045	399

info@hidrafluid.es
976 24 32 10

Item numbers index

Item no.	Page
77.000	455
77.007	455
77.008	455
77.009	455
77.010	455
78.051	457
78.052	457
78.053	457
78.054	457
78.055	457
78.056	457
79.000	435
79.001	435
79.002	435
79.003	435
79.004	435
79.005	435
79.006	435
79.007	435
79.008	435
79.009	435
79.010	435
79.011	435
79.012	435
79.013	435
79.014	435
79.015	436
79.016	436
79.017	436
79.018	436
79.019	436
79.020	436
79.023	436
79.024	436
102.005.496._*	124
102.008.497._*	124
102.010.498._*	124
102.015.499._*	124
102.020.500._*	124
102.025.501._*	124
102.030.502._*	124
102.040.503._*	124
102.050.504._*	124
102.060.505._*	124
112.004.001._*	144
112.005.002._*	144
112.006.003._*	144
112.008.007._*	144
112.010.011._*	144
112.012.015._*	144
112.015.022._*	144
112.018.024._*	144
112.020.031._*	144
112.022.037._*	144
112.025.042._*	144
112.030.052._*	144
112.035.060._*	144

Item no.	Page
112.040.071._*	144
112.045.077._*	144
112.060.091._*	144
112.085.102._*	144
132.4x2.031._*	136
132.4x2.079._*	130
132.7x4.034._*	136
132.7x4.080._*	130
132.15x5.067._*	136
132.15x5.081._*	130
132.18x6.082._*	130
132.24x8.066._*	136
132.24x8.083._*	130
132.30x10.084._*	130
132.36x12.068._*	136
132.45x15.064._*	136
132.45x15.085._*	130
132.60x20.086._*	130
132.75x25.087._*	130
270.059	453
270.078	455
270.079	455
270.088	455
270.089	456
270.090	455
270.107	454
270.108	454
270.120	453
270.121	453
270.131	454
270.181	454
270.182.O	456
270.227	454
270.228	456
270.245	455
270.279	454
270.280	454
270.302	455
270.303	455
270.304	455
270.306	456
270.307	456
270.308	456
270.320	454
270.334	455
270.343	456
270.395	457
270.396	457
270.420	453
270.423	455
270.518	457
270.519	457
270.560	455
270.561	453
270.562	453
270.563	453
270.564	453

Item no.	Page
270.565	453
270.566	453
270.567	455
270.576	455
270.577	455
270.579	456
ASR48-A	42
ASR48-A-ME	45
ASR48-B	42
ASR48-B-ME	45
ASR60-A	42
ASR60-A-ME	45
ASR60-B	42
ASR60-B-ME	45
EBA.08H.2-A	390
EIL.05H.1	388
EIL.05H.2	388
EIL.05L.1	388
EIL.05L.2	388
EIL.07H.1	388
EIL.07H.2	388
EIL.07L.1	388
EIL.07L.2	388
EMA.90x14	394
GR01.001.2000	52
GR01.002.2000	52
GR01.003.2000	52
GR01.004.2000	52
GR01.006.2000	52
GR01.007.2000	52
GR01.008.2000	54
GR01.009.2000	54
GR01.010	57
GR01.011	57
GR01.012	57
GR01.013	57
GR01.015	57
GR01.016	57
GR01.017	57
GR01.018	57
GR01.020A	64
GR01.021	64
GR01.022	64
GR01.023	65
GR01.024	65
GR01.025	65
GR01.026	64
GR01.027	64
GR01.030	66
GR01.031	66
GR01.032	66
GR01.035	75
GR01.036	75
GR01.037	75
GR01.040	66
GR01.041	66
GR01.042	66

FIPA challenge accepted

info@hidrafluid.es
976 24 32 10

Item numbers index

Item no.	Page
GR01.046	74
GR01.047	74
GR01.048	74
GR01.050	67
GR01.051	67
GR01.052	67
GR01.053	67
GR01.054	73
GR01.055	73
GR01.056	73
GR01.060	68
GR01.061	68
GR01.062	70
GR01.063	69
GR01.064	69
GR01.065	76
GR01.066	76
GR01.069	62
GR01.070	62
GR01.071	62
GR01.080	62
GR01.081	62
GR01.082	62
GR01.083	62
GR01.084	62
GR01.085	62
GR01.086	62
GR01.088A	58
GR01.089A	58
GR01.090A	58
GR01.091A	58
GR01.092A	58
GR01.093A	58
GR01.094A	58
GR01.095A	58
GR01.096A	58
GR01.097A	58
GR01.098A	58
GR01.100	71
GR01.101A	58
GR01.102A	58
GR01.103	60
GR01.104	60
GR01.105	60
GR01.110	77
GR01.111	77
GR01.112	77
GR01.120	72
GR01.121	72
GR01.122	72
GR01.123	72
GR01.150	64
GR02.001A	78
GR02.003A	78
GR02.004	78
GR02.005	78
GR02.006	84
GR02.010A	79
GR02.011A	79
GR02.013A	79
GR02.014	81
GR02.015	81
GR02.016	79
GR02.020	83
GR02.020-KG	85
GR02.022	83
GR02.022-KG	85
GR02.023	83
GR02.023-KG	85
GR02.024	83
GR02.026	82
GR02.027	82
GR02.028	82
GR02.029	82
GR02.030A	91
GR02.031A	91
GR02.035	80
GR02.036	80
GR02.037	80
GR02.038	80
GR02.040	92
GR02.041	92
GR02.043	92
GR02.050	93
GR02.051	93
GR02.053	93
GR02.060	94
GR02.061	94
GR02.063	94
GR02.070A	105
GR02.071A	105
GR02.072A	105
GR02.083	105
GR02.084	105
GR02.085	105
GR02.100	105
GR02.101A	105
GR02.102A	105
GR02.104	105
GR02.105	105
GR02.106	105
GR02.107	105
GR02.140	106
GR02.141	106
GR02.142	106
GR02.153	106
GR02.154	106
GR02.155	106
GR02.170	106
GR02.171	106
GR02.172	106
GR02.180	106
GR02.181	106
GR02.182	106
GR02.210	88
GR02.211	88
GR02.212	88
GR02.220	87
GR02.221	87
GR02.222	87
GR02.227	251
GR02.228	251
GR02.229	251
GR02.230	86
GR02.231	86
GR02.232	86, 251
GR02.233	251
GR02.240	107
GR02.241	107
GR02.242	107
GR02.250	107
GR02.251	107
GR02.252	107
GR02.260	107
GR02.261	107
GR02.262	107
GR02.270	108
GR02.273	108
GR02.280	250
GR02.281	250
GR02.282	250
GR02.283	250
GR02.284	250
GR02.285	250
GR02.286	250
GR02.287	250
GR02.300	99
GR03.001A	112
GR03.002A	112
GR03.003A	112
GR03.010A	112
GR03.011A	112
GR03.012A	112
GR03.036	112
GR03.037	112
GR03.038	112
GR03.039	112
GR03.040A	114
GR03.041A	114
GR03.042A	114
GR03.050A	114
GR03.051A	114
GR03.052A	114
GR03.070A	114
GR03.071A	114
GR03.072A	114
GR03.073A	114
GR03.074A	114
GR03.075A	114
GR03.080A	117
GR03.080T	118

info@hidrafluid.es
976 24 32 10

Item numbers index

Item no.	Page
GR03.081A	117
GR03.081T	118
GR03.090A	117
GR03.090T	118
GR03.091A	117
GR03.091T	118
GR03.114	117
GR03.114T	118
GR03.115	117
GR03.115T	118
GR03.120B	119
GR03.121B	119
GR03.130B	119
GR03.131B	119
GR03.152B	119
GR03.153B	119
GR03.160	110
GR03.161	110
GR03.162	110
GR03.163	110
GR03.164	110
GR03.165	110
GR03.202	111
GR03.203	111
GR03.204	111
GR03.240	115
GR03.241	115
GR03.242	115
GR03.250	115
GR03.251	115
GR03.252	115
GR03.260	115
GR03.261	115
GR03.262	115
GR03.1010	154
GR03.1010T	155
GR03.1025	154
GR03.1025T	155
GR03.1210T	155
GR03.1225T	155
GR03.1420	154
GR03.1435	154
GR03.1620T	155
GR03.1635T	155
GR03.2025	154
GR03.2025T	155
GR03.2050	154
GR03.2050T	155
GR03.2540T	155
GR03.2580T	155
GR04.034	200
GR04.034-H	206
GR04.035	202
GR04.036	206
GR04.037	205
GR04.038S	204
GR04.040	200
GR04.041	202
GR04.044	200
GR04.044-H	206
GR04.045	202
GR04.046	206
GR04.047	205
GR04.060	164
GR04.080	165
GR04.090	166
GR04.090-1N	166
GR04.090-1P	166
GR04.090-3P	166
GR04.090H	166
GR04.090H-2N	166
GR04.090H-2P	166
GR04.100	170
GR04.100-1N	170
GR04.100-1P	170
GR04.100-2N	170
GR04.100-2P	170
GR04.100-3N	170
GR04.100-3P	170
GR04.100B	170
GR04.100H	170
GR04.100H-2N	170
GR04.100H-2P	170
GR04.100HNBR	170
GR04.100S	170
GR04.100U	170
GR04.100XW	170
GR04.102	177
GR04.110	196
GR04.110A	194
GR04.110A/NPN	194
GR04.110B	194
GR04.111A	193
GR04.111A/NPN	193
GR04.121-10	237
GR04.121-16	237
GR04.121-20	237
GR04.121-25	237
GR04.122-10	209
GR04.122-10-1	214
GR04.122-10-4	214
GR04.122-10S	209
GR04.122-16	209
GR04.122-16-1	214
GR04.122-16-4	214
GR04.122-16S	209
GR04.122-20	209
GR04.122-20-1	214
GR04.122-20-4	214
GR04.122-20S	209
GR04.122-25	209
GR04.122-25-1	214
GR04.122-25-4	214
GR04.122-25S	209
GR04.122-32	209
GR04.122-32-1	214
GR04.122-32-4	214
GR04.122-32S	209
GR04.122-40	209
GR04.122-40-1	214
GR04.122-40-4	214
GR04.122-40S	209
GR04.123-10	233
GR04.123-10-1	236
GR04.123-16	233
GR04.123-16-1	236
GR04.123-20	233
GR04.123-20-1	236
GR04.123-25	233
GR04.123-25-1	236
GR04.123-32	233
GR04.123-32-1	236
GR04.125-16	227
GR04.125-16L	230
GR04.125-25	227
GR04.125-25L	230
GR04.125-32	227
GR04.125-32L	230
GR04.125-40	227
GR04.125-40L	230
GR04.125-50	227
GR04.125-50L	230
GR04.125-60	227
GR04.125-80	227
GR04.130	178
GR04.130-1N	178
GR04.130-1P	178
GR04.130B	178
GR04.130B-1N	178
GR04.130B-1P	178
GR04.130H	178
GR04.130U	178
GR04.130XW-3P	178
GR04.140A	188
GR04.140B	188
GR04.140B/NPN	188
GR04.193N	408
GR04.193P	408
GR04.196A	198
GR04.197A	197
GR04.197B	197
GR04.198	404
GR04.198/NPN	404
GR04.199	404
GR04.199/NPN	404
GR04.202N	404
GR04.202P	404
GR04.203N	404
GR04.203P	404
GR04.280N	404
GR04.280P	404

FIPA challenge accepted

info@hidrafluid.es
976 24 32 10

Item numbers index

Item no.	Page
GR04.510	219
GR04.510-1	219
GR04.510-2	219
GR04.516	219
GR04.516-1	219
GR04.516-2	219
GR04.520	219
GR04.520-1	219
GR04.520-2	219
GR04.525	223
GR04.525-1	223
GR04.525-2	223
GR04.532	223
GR04.532-1	223
GR04.532-2	223
GR04.600-12	216
GR04.600-16	216
GR04.600-20	216
GR04.600-26	216
GR04.600-32	216
GR04.700-20	259
GR04.700-25	259
GR04.710-25	261
GR04.710-50	261
GR04.710-75	261
GR04.710-100	261
GR04.711-25	256
GR04.711-40	256
GR04.711-60	256
GR04.715-70	263
GR04.720-25	261
GR04.720-50	261
GR04.725-60	265
GR04.725-90	265
GR04.730-20	259
GR04.740B	257
GR04.840A-20	190
GR04.840A-20-20	190
GR04.840A-20-30	190
GR04.840A-30	190
GR04.840B-20	190
GR04.840B-20-20	190
GR04.840B-20-20/NPN	190
GR04.840B-20-30	190
GR04.840B-20-30/NPN	190
GR04.840B-20/NPN	190
GR04.840B-30	190
GR04.840B-30/NPN	190
GR04.2016H	184
GR04.2016R	184
GR04.2016RC	186
GR04.2016RC/NPN	186
GR04.2016S	184
GR04.2016SC	186
GR04.2016SC/NPN	186
GR04.F01-35	242
GR04.F01-40	242

Item no.	Page
GR04.F01-45	242
GR04.F02-50	242
GR04.F02-55	242
GR04.F02-60	242
GR04.F02-65	242
GR04.F02-70	242
GR04.F02-75	242
GR04.F02-80	242
GR04.F02-85	242
GR04.F02-90	242
GR04.F02-95	242
GR04.F02-100	242
GR04.F208	245
GR04.F208-SI	245
GR04.F210	245
GR04.F210-SI	245
GR04.F212	245
GR04.F212-SI	245
GR04.F214	245
GR04.F214-SI	245
GR04.F218	245
GR04.F218-SI	245
GR04.F222	245
GR04.F222-SI	245
GR04.F227	245
GR04.F227-SI	245
GR04.F233	245
GR04.F233-SI	245
GR04.F241	245
GR04.F241-SI	245
GR04.F251	245
GR04.F251-SI	245
GR04.F263	245
GR04.F263-SI	245
GR05.001	97
GR05.001A	96
GR05.002	97
GR05.003	97
GR05.021	13
GR05.022	15
GR05.022-W	19
GR05.022-X	15
GR05.023	18
GR05.024	18
GR05.031	13
GR05.032	15
GR05.032-W	19
GR05.032-X	15
GR05.041	13
GR05.042	15
GR05.042-W	19
GR05.042-X	15
GR05.051	13
GR05.052	15
GR05.052-W	19
GR05.052-X	15
GR05.100	32

Item no.	Page
GR05.101	32
GR05.102	32
GR05.121	39
GR05.122	40
GR06.001	89
GR06.002A	89
GR06.003	89
GR06.020	90, 208
GR06.021A	90, 208
GR06.022	90, 208
GR06.034	249
GR06.035	249
GR06.036	249
GR06.037	249
GR06.045S	417
GR06.050	240
GR06.050S-M8	416
GR06.050S-M12	416
GR06.051	240
GR06.051S-M18	416
GR06.052	240
GR06.053	240
GR06.054	240
GR06.055	240
GR06.060	102
GR06.061	102
GR06.062	102
GR06.063	102
GR06.125-16	241
GR06.125-25	241
GR06.125-32	241
GR06.125-40	241
GR06.125-50	241
GR06.125-60	241
GR06.125-80	241
GR07.001	351
GR07.002	351
GR07.010	456
GR07.011	456
GR07.012	456
GR07.012-5	336
GR07.012-10	336
GR07.013	456
GR07.016-5	336
GR07.016-10	336
GR07.016-20	336
GR07.016-30	336
GR07.020	95
GR07.020-5	336
GR07.020-10	336
GR07.020-20	336
GR07.020-30	336
GR07.020-50	336
GR07.021	354
GR07.022	353
GR07.024	353
GR07.025-5	336

info@hidrafluid.es
976 24 32 10

Item numbers index

Item no.	Page
GR07.025-10	336
GR07.025-20	336
GR07.025-30	336
GR07.025-50	336
GR07.026	355
GR07.028	355
GR07.030	352
GR07.032-5	336
GR07.032-10	336
GR07.032-20	336
GR07.032-30	336
GR07.032-50	336
GR07.040	267
GR07.041	267
GR07.042	268
GR07.112-25	338
GR07.112-50	338
GR07.112-75	338
GR07.116-25	338
GR07.116-50	338
GR07.116-75	338
GR07.116-100	338
GR07.196	350
GR07.197	350
GR07.198	350
GR07.199	350
GR07.208-30	340
GR07.208-50	340
GR07.208-75	340
GR07.216-30	343
GR07.216-50	343
GR07.216-75	343
GR07.216-100	343
GR07.220-10	343
GR07.220-30	343
GR07.220-50	343
GR07.220-75	343
GR07.220-100	343
GR07.220-125	343
GR07.220-150	343
GR07.506-10	346
GR07.506-20	346
GR07.506-30	346
GR07.510-10	346
GR07.510-20	346
GR07.510-30	346
GR07.516-10	346
GR07.516-20	346
GR07.516-30	346
GR07.520	100
GR07.520S	101
GR07.521	100
GR09.xx1	278
GR09.xx2	252
GR09.xx3	252
GR-XL01.003.2000	55
GR-XL01.004.2000	55

Item no.	Page
GR-XL01.005.2000	55
GR-XL01.012	57
GR-XL01.013	57
GR-XL01.020	64
GR-XL01.021	64
GR-XL01.022	64
GR-XL01.025	72
GR-XL01.026	72
GR-XL01.028	73
GR-XL01.029	74
GR-XL01.035	75
GR-XL01.062	70
GR-XL01.063	69
GR-XL01.100	58
GR-XL01.101	58
GR-XL01.102	58
GR-XL01.103	58
GR-XL01.104	58
GR-XL01.105	62
GR-XL01.106	58
GR-XL02.003	78
GR-XL02.005	78
GR-XL02.013	79
GR-XL02.016	79
GR-XL02.022	83
GR-XL02.024	83
GR-XL02.029	82
GR-XL02.033	91
GR-XL02.038	80
GR-XL05.032	15
GR-XL05.052	15
GS01.004	419
GS01.006	419
GS01.008	419
GS01.012	419
GS02.001	378
GS04.001	408
GS04.002	408
GS04.003	408
GS04.004	408
GT-H12K	321
GT-H30	321
GT-H120K	321
GT-HS30	321
GT-HWR1	323
GT-HWR10	323
GT-HWS1	323
GT-HWS10	323
GT-N3	288
GT-N5	288
GT-N7	288
GT-N10	288
GT-N12	288
GT-N20	288
GT-N30	288
GT-N50	288
GT-NF05	308

Item no.	Page
GT-NF10	308
GT-NF15	308
GT-NR3	286
GT-NR5	286
GT-NR7	286
GT-NR10GR	328
GT-NR10H	325
GT-NR10L	286
GT-NR10S	326
GT-NR10ST2	327
GT-NR20	286
GT-NR20GR	328
GT-NR20H	325
GT-NR20S	326
GT-NR20ST2	327
GT-NR30	286
GT-NR30GR	328
GT-NR30H	325
GT-NR30S	326
GT-NR30ST2	327
GT-NR50	286
GT-NR50H	325
GT-NR50ST2	327
GT-NS3	286
GT-NS5	286
GT-NS7	286
GT-NS10L	286
GT-NS20	286
GT-NS20H-1	286
GT-NS30	286
GT-NT03	316
GT-NT03-4	316
GT-NT03R	316
GT-NT03R-4	316
GT-NT05	316
GT-NT05-4	316
GT-NT05R	316
GT-NT05R-4	316
GT-NT10	316
GT-NT10-6	316
GT-NT10R	316
GT-NT10R-6	316
GT-NT20	316
GT-NT20-6	316
GT-NT20R	316
GT-NT20R-6	316
GT-NY05	309
GT-NY05-4	309
GT-NY05R	309
GT-NY05R-4	309
GT-NY10	309
GT-NY10-4	309
GT-NY10R	309
GT-NY10R-4	309
GT-NY15	309
GT-NY15-4	309
GT-NY15R	309

FIPA challenge accepted

info@hidrafluid.es
976 24 32 10

Item numbers index

Item no.	Page
GT-NY15R-4	309
GT-NY25	309
GT-NY25-6	309
GT-NY25R	309
GT-NY25R-6	309
H12ME30K	322
H30ME	322
H120SK	322
HW1J	324
HW10J	324
LT10	414
LT10/NPN	414
LT18OHT	412
LT18OHT/NPN	412
LT19	412
LT19/NPN	412
M8B3 / M8S4	411
M8B4 / M8S3	411
MG35	269
MG55	269
MG70	269
N3AE	303
N3AJ	296
N3AP	298
N3AS	306
N3BJ	304
N3HS	306
N5AE	303
N5AP	298
N5AS	306
N5BJ	304
N5HS	306
N7AE	303
N7AP	298
N7AS	306
N7BJ	304
N7HS	306
N7PF	298
N10AE	303
N10AP	298
N10AS	306
N10HS	306
N10LAB2	296
N10LAB152	298
N10LAP	298
N10LAS	306
N10LPF	298
N12AP	298
N12AS	306
N12HS	306
N20AA27	298
N20AA239	298
N20AB39	296
N20AB360	298
N20AE	303
N20AH	302
N20AJ	296
N20AJL	296
N20AL	301
N20AML	300
N20AMR	300
N20AP	298
N20AS	306
N20BFB	304
N20HS	306
N20PF	298
N30AA114	298
N30AE	303
N30AH	302
N30AJ	296
N30AJL	296
N30AL525	301
N30AML	300
N30AMR	300
N30AP	298
N30AS	306
N30BBB	306
N30PF	298
N50AB	298
N50ABH41	298
N50AE	303
N50AJL	296
N50AS	304
N50BBB	306
NE05AJ	318
NE10AJ	318
NT03AJ	318
NT03AJT	318
NT05AE	320
NT05AJ	318
NT05AJB	318
NT05AJH	318
NT05AJL	318
NT05AJT	318
NT10AE	320
NT10AJ	318
NT10AJB	318
NT10AJH	318
NT10AJL	318
NT10AJT	318
NT20AJ	318
NT20AJB	318
NT20AJH	318
NT20AJL	318
NY05AH	313
NY05AJ	311
NY05AJB	311
NY05AJL	311
NY05AJT	311
NY05BJ	315
NY05RAH	313
NY05RAJ	311
NY05RBJ	315
NY10AH	313
NY10AJ	311
NY10AJB	311
NY10AJL	311
NY10AJT	311
NY10RAH	313
NY10RAJ	311
NY15AH	313
NY15AJ	311
NY15AJB	311
NY15AJL	311
NY15AJT	311
NY15RAH	313
NY15RAJ	311
NY25AH	313
NY25AJ	311
NY25AJB	311
NY25AJL	311
NY25RAH	313
NY25RAJ	311
P-10L	295
P-20	295
P-30	295
P-50	295
QC3-3M	446
QC3-4M	446
QC3-6M	446
QC4-3M	446
QC4-4M	446
QC4-6M	446
QC6-3M	446
QC6-4M	446
QC6-6	446
QC6-6M	446
QC6-8	446
QC8-6	446
QC8-8	446
SF05.A15.25	289
SF10.A15.35	290
SF10.A40.34	290
SF20.A40.51	291
SF20.A90.41	291
SF20.I36	291
SF20.I65	291
SF20.P48	291
SF30.A30.76	293
SF30.I53	293
SF30.I74	293
SF30.P45	293
SR50-A	20
SR50-A-MV	20
SR50-A-SL	20
SR50-A-SL-MV	20
SR50-B	23
SR50-C	32
SR90-A	24
SR90-A-MV	24
SR90-A-SL	24

info@hidrafluid.es
976 24 32 10

Item numbers index

Item no.	Page
SR90-A-SL-MV	24
SR90-B	27
SR90-C	32
SR90-W	37
SR150-A	28
SR150-A-SL	28
SR150-B	31
SR150-C	32
SR150-W	37
WR 0425	433
WR 0640	433
WR 0850	433
WR 0860	433
WR 1280	433
WR 1290	433
WR 1613	433

FIPA challenge accepted

info@hidrafluid.es
976 24 32 10